EDITION 2021/22

COMMERCIAL CATALOGUE

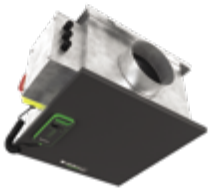

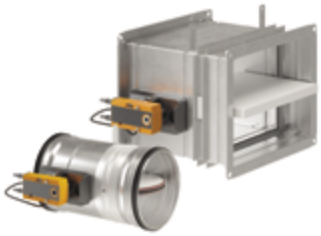

HEAT RECOVERY VENTILATION - FANS AND ACCESSORIES -
AIRFLOW CONTROL DUCTWORK AND ACCESSORIES -
AIR DIFFUSION - FIRE PROTECTION

aldes

GLOSSARY

Type of building

Individual housing | Collective housing | Commercial

Energy classes

A++ to G

Certifications

Compliant with EU regulations

Eurovent mark

German energy performance label

GS electrical safety (tested to Tüv)

Respects the recommendations for display of performance ratings defined by Uniclima

EAC certification

SAP-PCDB listed

Moroccan CMIM Marking

Regulations

BIM objects

Selection/design aid software

Find out more p. 12

Packaging column

Optimum overpackaging.
Unless indicated otherwise, minimum selling quantity = 1.

Stock

- Item code in **red**: product available rapidly
  Three day constant delivery time (with exceptions...).
- Item code in **black**: product made to order
  Variable delivery time confirmed when order is placed.

DISCOVER ALDES

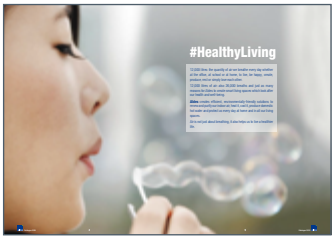

Aldes
p. 5

Aldes Organisation
p. 10

COMMERCIAL VENTILATION

Air handling units p. 28

Counterflow heat exchangers
p. 33

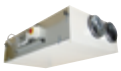

False-ceiling
p. 49

Rotary heat exchangers
p. 56

Coils p. 66

FIRE PROTECTION

Smoke and heat exhaust fans p. 127

ProtectONE®
p. 127

VELONE F400
p. 156

HELIONE
p. 172

Safety boxes p. 179

New

Axone
p. 179

Fire dampers with Belimo mechanism p. 230

New

ISONE®2 Europe Circular
p. 233

New

ISONE®2 Europe Rectangular
p.235

New

Belimo mechanism
p. 243

AIRFLOW CONTROL AND DUCTWORK

Airflow/measurement adjustment and regulation p. 253

VMT Mod
p. 253

MR range
p. 264

Dampers
p. 272

AIR DIFFUSION

AldesArchitect™

New

p. 347

Small metal terminals p. 348

BIM2 300 and 320
p. 348

BEM 780
p. 349

Core grilles
p. 350

Software
p. 12

System solutions
p. 18

Environment and commercial conditions
p. 427

Contacts
p. 433

Box fans p. 74

EasyVEC® Compact micro-watt+ **p. 78**

EasyVEC® micro-watt + **p. 87**

EasyVEC® Standard **p. 92**

Sleeves **p. 94**

Accessories **p. 95**

Other fans p. 96

Roof fans TAHA/TAVA **p. 96**

Duct fan VC **p. 109**

HELICA axial fan **p. 111**

Accessories p. 112

Smoke exhaust dampers and air inlets p. 186

Optone dampers **p. 194**

GFAP, GFE and GGH grilles **p. 201**

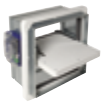

Plafone and GDF dampers **p. 210**

Oxytone and Airone air inlets **p. 216**

Smoke and heat exhaust Collective housing **p. 227**

Fire dampers with Isone®2 mechanism p. 230

ISONE®2 Circular **p. 233**

ISONE®2 Rectangular **p.235**

ISONE®2 mechanism **p. 237**

High pressure fire dampers

Isone 1500 **p. 244**

Terminal cartriges and grilles

Terminal cartriges and grilles CF1/ CF2 **p. 247**

Testing equipment

« ALDES CONTROL » pack **p. 248**

Rigid ductwork: galvanised, aluminium and special p. 278

Circular ducts **p. 278**

Galvanised accessories **p. 280**

Oblong galvanised ductwork **p. 299**

Insulation and acoustics p. 313

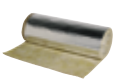

Roll of mineral wool **p. 313**

OCTA **p. 314**

Flexible and semi-rigid ductwork p. 320

RT Flex **p. 320**

Alflex and Algaine **p. 321**

Accessories, installation and ductwork equipment p. 326

STE/STS **p. 327**

Adhesive tape **p. 329**

Indoor grilles p. 352

With fins **p. 352**

With front bars **p. 356**

With filter **p. 364**

Transfer **p. 367**

Diffusers p. 368

Ceiling **p. 368**

With slots **p. 381**

Swirl jet **p. 387**

Special **p. 398**

Outdoor grilles p. 400

THE FIRE DAMPER THAT FACILITATES INSTALLATION AND GUARANTEES THE SECURITY OF THE BUILDING AND ITS OCCUPANTS.

ISONE® 2

- Easy and validated installation on all types of support.
- Wide range of dimensions covering all needs.
- Simplified maintenance: data collection via ALDES SecurONE application.
- 100% Designed and made in France.

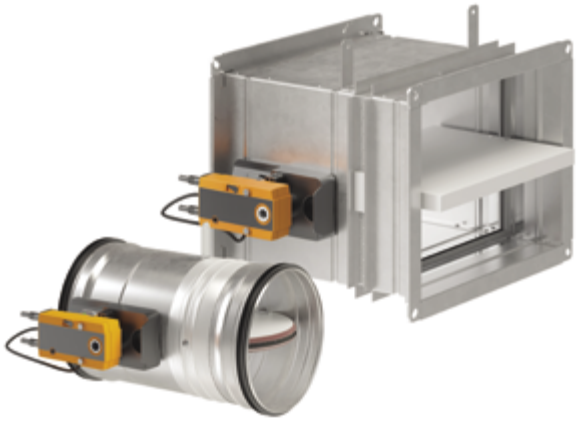

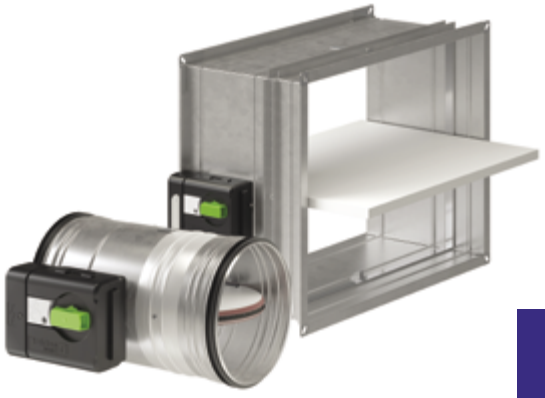

More information on **aldes-international.com/en**

#HealthyLiving

aldes

NEW PRODUCTS

Box fans

EasyVEC® Compact p. 54:

- New size available : EasyVEC Compact 3000.

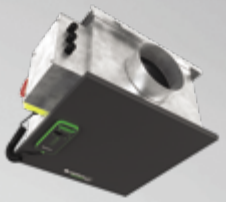

Fire Protection

Isone®2 p. 62 : the fire damper which simplifies installation and guarantees safety occupants and buildings.

- Simplified installation: a single model for all common partitions..
- Class C sealing as standard.
- 100% upgradeable mechanism before or after installation.

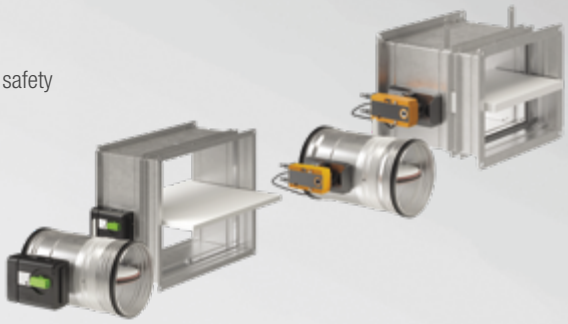

Air Diffusion

AldesArchitect® p. 75 : Air diffusers and smoke extraction grilles also deserves elegance and high-end.

- Essentielle Range : Up to 100 RAL colors available.
- Elégance Range : In film or in paint: metallic, brushed metallic or marble colors.
- Exclusive Range : Tailor-made offer allowing the application of a personalized pattern.

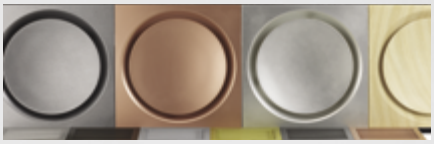

#HealthyLiving

12,000 litres: the quantity of air we breathe every day whether at the office, at school or at home, to live, be happy, create, produce, rest or simply love each other.

12,000 litres of air: also 26,000 breaths and just as many reasons for Aldes to create smart living spaces which look after our health and well-being.

Aldes creates efficient, environmentally-friendly solutions to renew and purify our indoor air, heat it, cool it, produce domestic hot water and protect us every day at home and in all our living spaces.

Air is not just about breathing, it also helps us to live a healthier life.

ALDES GROUP

The French international family group Aldes has never stopped innovating to improve indoor air quality and thermal comfort in all its ninety years. Its Research and Development centres have been behind many innovations which nowadays contribute to the health and well-being of millions of people worldwide.

In figures

FOUNDED IN
1925

16
SUBSIDIARIES

1,500
EMPLOYEES

5
R&D CENTRES

10 MILLION
HOMES FITTED WITH ALDES EQUIPMENT

200,000
MORE PEOPLE PROTECT THEIR HEALTH WITH ALDES PRODUCTS EVERY YEAR

50 MILLION
PEOPLE WORLDWIDE BREATHE ALDES AIR

100 MILLION
M^3 TREATED BY ALDES

Our commitment

It is important to take care of each individual's health and therefore Aldes has created **#HealthyLiving,** the movement that embodies our commitment, our caring, our sense of responsibility and our pioneering spirit.

Find out more about #HealthyLiving, see previous page.

Our activities

Multi-family or individual housing, offices, hotels, crèches, hospitals, homes for the elderly, etc.
By controlling the air, Aldes undertakes to create smart living spaces which look after your health, well-being and safety.

VENTILATION

High-performing solutions to renew the indoor air and remove pollutants - CO_2, VOC (adhesives, solvents, furniture, paints, etc.) and humidity - whilst adjusting the flow rates to save energy and reduce the heating bill.

PURIFICATION

Innovative solutions to purify the air in all living spaces (schools, crèches, offices, hotels, apartments, houses, etc.). In addition to its ventilation function that renews the indoor air, purification solutions filter the incoming outdoor air for pollutants (pollens, fine particles PM2.5 and PM10, bacterial, gas, VOC, etc.). These solutions are also fitted with high-output heat exchangers which optimise thermal comfort by controlling temperatures better.

THERMAL COMFORT

Aldes develops innovative solutions using the calories extracted from the air for both heating and cooling and for producing hot water.
The Aldes solutions incorporate single- or multi-function renewable energy systems.
They guarantee excellent living comfort whilst saving on energy.

CENTRALISED VACUUM CLEANING

Centralised dust vacuum cleaning solutions suitable for new builds and refurbished housing. On a daily basis, the household is becoming simpler, more efficient and helps to maintain healthier air.

FIRE PROTECTION

At the office, at home, at school, to live safely and prevent the potential risks of a fire, Aldes fire protection solutions - smoke and heat exhaust and compartmentation - create a breathable airlock, giving the occupants time to leave the buildings and the emergency services to intervene.

DUCTWORK, AIRFLOW CONTROL AND AIR DIFFUSION

A complete range designed to optimise the overall efficiency of the installation and the comfort of occupants in non-residential buildings (small shops, offices, schools, crèches, hotels, hospitals, homes for the elderly, etc.).

SERVICES

Aldes Technical Assistance (ATA), Aldes Training Centres and Aldes software and applications are used to design and construct with everyone in the construction trade services for today and tomorrow.

PRESTIGIOUS REFERENCES

High Rise Tower
Doha, Qatar.

Tour InCity
Lyon, France.

Stade Olympique Lyonnais
Décines, France

Opéra de Lyon
Lyon, France

Twin Tower
Kuala Lumpur, Malaysia

North Galaxy
Brussels, Belgium

Tour Paris la Défense
Paris, France.

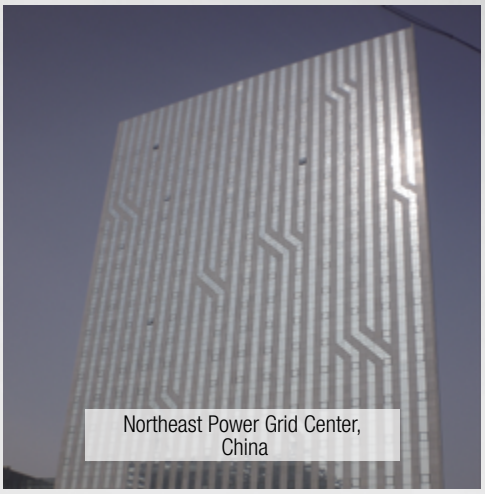
Northeast Power Grid Center,
China

Futuroscope
Poitiers, France

Tour Oxygène
Lyon, France

Golden Hotel
Kuala Lumpur, Malaysia

Fondation Louis Vuitton
Paris, France.

ALDES
A STRONG AND INTERNATIONAL BRAND

EUROPE

FRANCE
ALDES FRANCE
50, rue Jean Zay 69800 Saint Priest
Tél. +33 4 28 00 10 80
www.aldes.fr / www.pro.aldes.fr

BELGIUM
ALDES BENELUX
Rue Jean Verkruyts 60, 4681 Oupeye
Tél. +32 4 374 98 20
www.aldesbenelux.com

ITALY
ALDES ITALIA
Via Gran Bretagna, 35, 41122 Modena MO
Tél. +39 059 492 3211
www.aldes.it

SPAIN
ALDES VENTICONTROL
Pol. Ind. Prado Overa, Calle Puerto de Pajares, 29,
28911 Leganés, Madrid
Tél. +33.4.28.00.10.80
www.aldes.es

GERMANY
EXHAUSTO BY ALDES GMBH
Mainzer Str. 43 DE-55411 Bingen am Rhein
Tél. +49 6721 9178-111
www.exhausto.de

DENMARK
EXHAUSTO A/S
Odensevej 76 DK-5550 Langeskov
Tél. +45 6566 1110
www.exhausto.dk

SWEDEN
EXHAUSTO AB
Östra Hindbyvägen 26B SE-21374 MalmöTél.
+33.4.28.00.10.80
www.exhausto.se

NORWAY
EXHAUSTO AS
Hvamsvingen 4 NO-2013 Skjetten
Tél.+47 6387 0770
www.exhausto.no

ALDES HEAD OFFICE

20, boulevard Irène Joliot-Curie
69694 Vénissieux Cedex - FRANCE
Tél. +33 4 78 77 15 15
www.aldes.com / www.aldesgroupe.com

ALDES INTERNATIONAL (EXPORT)

50, rue Jean ZAY
69800 Saint Priest - FRANCE
Tél. +33 4 28 00 10 99
www.aldes-international.com/en

AMERICAS - MIDDLE EAST ASIA - INDIAN OCEAN

AMERICAS
ALDES NORTH AMERICA - USA
4521 19th St Ct E #104, Bradenton, FL 34203, USA
Tél. +1 941-351-3441
www.aldes.us

ALDES NORTH AMERICA - CANADA
100 rue Carter Saint-Léonard-d'Aston (Québec) Canada J0C 1M0
Tél. +1 819-399-3400
www.aldes.ca

ASIA
ALDES CHINA
No.38, Lane 965, Xiangjiang road, Nanxiang Town,
201802 Shanghai PR, CHINA
Tél. +86 21 62 26 11 72
www.aldes.cn

MIDDLE EAST
ALDES MIDDLE EAST
PO Box 8653/SAIF Zone Sharjah, UNITED ARAB EMIRATES
Tél. + 971 6 557 82 85
www.aldes.ae

INDIAN OCEAN
ALDES REUNION
15, rue du Maine 97490 Sainte Clotilde
Tél. +262 2 62 97 96 81
www.aldes.re

ALDES MAURITIUS
Montebello Les pailles
Tél. +230 286 77 62
www.aldes.re

BE MORE EFFICIENT WITH ALDES SOFTWARE

With solutions that have been developed specifically for each player in the building industry, Aldes offers tools that help you to be more efficient in controlling aeraulic ductwork systems.

Design and dimensioning software (Conceptor)

Conceptor Ventilation
Design software platform for ventilation projects
- Individual housing module.
- Collective housing module.
- Commercial module.

Conceptor T.One®
Heating studies design software. Conceptor T.One® is a professional software program that can help to dimension the T.One® system and its diffusion plenum.

Conceptor Smoke and heat exhaust (French only)
Design aid software for mechanical smoke and heat exhaust systems in buildings
- Optimises smoke and heat exhaust installation.
- Prints out assembly data sheets.
- Optimises smoke and heat exhaust ductwork
- Selects fan F400-120
- Selects flap with assembly data sheet.

Selection software (Selector)

RT 2012

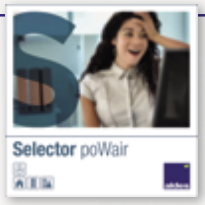

PoWair Selector
Selection aid software for unidirectional fans
- Tool for calculating fan energy consumption.
- Access to whole RT 2012 library.

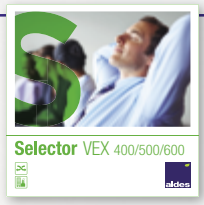

VEX 400, 500, 600 Selector
Selection, configuration and performance calculation aid software for VEX 400, 500 and 600 air handling units.

Koanda 3D Selector
Air diffusion project management software.
- A new, powerful algorithm, an intuitive interface and high-performing 3D display of air streams in the room.

DFE/DFE+ Selector
Configuration aid software for DFE range air handling units
- Simulates thermal outputs.
- Access to all technical data.

EXSELECT Configuration and performance calculation aid software for VEX 200, 300C and CX 300C air handling units.

Digital tools available on:

Google play | Available on the App Store

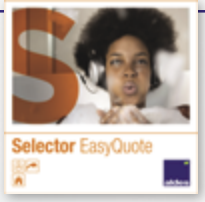

EasyQuote
The quick costing application to produce your quotations for individual housing in three clicks!

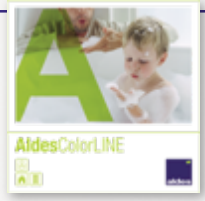

ColorLINE®
Simple and educational, the application displays the incorporation of a ColorLINE® grille into your interior decoration.

AldesConnect™
With AldesConnect™, use your smartphone to control the air quality and thermal comfort of your home from anywhere, at any time.

Download the Aldes software programs directly at: https://services.aldes.com

Smart 3D object download platform

Aldes CAD Library

Direct access free of charge (no user account needed) to smart 3D objects in Revit™ format, as well as DWG 3D and DXF 2D formats for Aldes products. Its full-featured, powerful search engine enables you to download all or part of the Aldes range for integration in your BIM projects.

Download it at cad.aldes.com

You can find on our site

WEBSITE
www.aldes-international.com

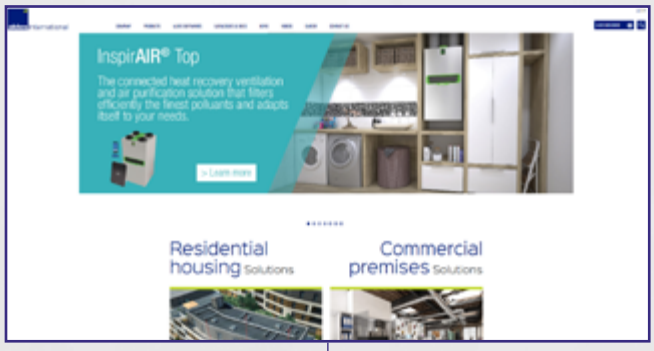

- Aldes information.
- Information on product solutions.
- Documentation, instructions, catalogues, etc.
- Information about regulations.
- Aldes contacts.
- Product videos.
- News.

YouTube channel

Find all our videos on the Aldes International YouTube channel: product videos, software videos, installation and maintenance tutorials, information on air quality or the regulations.

"Youtube.com/c/AldesInternationalEN"

Social networks

Follow us also on the **Twitter and Linkedin** social networks, get the latest Aldes news and interact with us.

"AldesOfficiel"
twitter.com/AldesOfficiel

"Aldes"
www.linkedin.com/company/aldes

BE MORE EFFICIENT
WITH ALDES SOFTWARE

Conceptor Ventilation

The Aldes 3-in-1 software solution for all your ventilation projects

Conceptor Ventilation has become the go-to tool for building professionals. Freely design and dimension air ductwork systems with guided assistance at each step of your project.

Individual housing module

Collective housing module

NEW **Commercial** module

PROFESSIONAL
Dimension complex ductwork systems for small and medium commercial applications.

TIME SAVINGS
Produce full studies, in next to no time, using an intuitive and user-friendly interface designed to meet your needs.

RELIABLE RESULTS
Software data are continuously updated and tested by our staff.

SIMPLICITY
Discover multiple functions with the assistant present at each step of the project.

OPTIMISATION
The solution automatically selects the most appropriate products for your design.

CUSTOMER SATISFACTION
In record time, generate a full report for your customers, containing the key data for the ventilation system.

SelectorKoanda 3D

What if the invisible became visible?

Selector Koanda 3D was developed to help construction tradespeople select the most suitable Aldes air diffusion products to meet the needs of each project. Select, position and enjoy a 3D view of air diffusers which respect the ambient and acoustic comfort of occupants.

PROFESSIONAL
Display air jets in 3D in terms of air speed and temperature.

FLEXIBILITY
Edit parameters and characteristics throughout the project. Selector Koanda 3D automatically recomputes all the results for you.

RELIABLE RESULTS
Manage obstacles to ensure your design is as close to reality as possible.

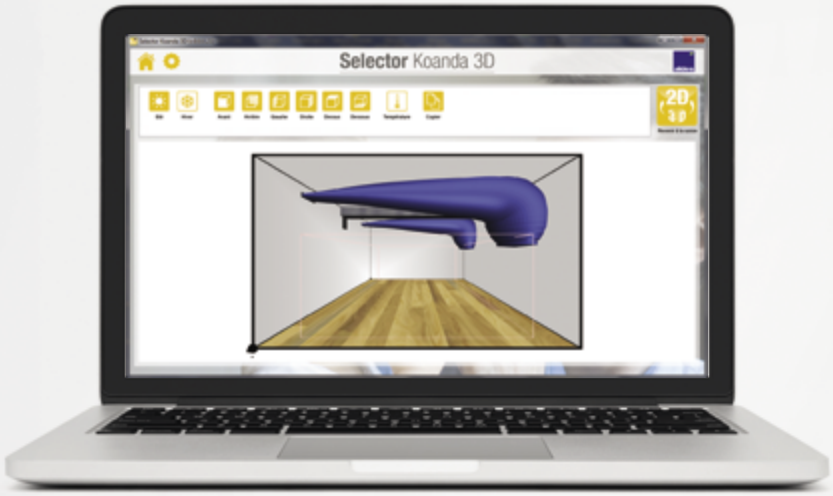

SIMPLICITY
Enjoy an accessible and user-friendly interface.

TIME SAVINGS
Manage your whole project or quickly select just one terminal.

CUSTOMER SATISFACTION
Produce a full, technical and visual report containing all terminals and their accessories (dampers, plenums etc.)

For more information and downloading :

https://www.aldes-international.com/en/softwares/softwares/

EASYVEC: A CONNECTED SYSTEM WITH ALDES CONNECT™ PRO

NO MORE UNDETECTED BREAKDOWNS OR MALFUNCTIONS AND ASSOCIATED LOSSES!

DETECT
breakdowns and malfunctions

State of box fans in real time
Immediate warning if there is a problem on the box fan.

FACILITATE
rapid intervention by maintenance firms.

Immediate, automatic notification by e-mail.

Henceforth, monitor the smooth operation of all your installed equipment directly from your Internet browser!

ALDES TRAINING
TRAINING TO REMAIN EFFICIENT

One team
of specialised instructors

1,200 trainees
attending every year

10 Aldes branches

30 training programmes

1,500 m²
of space dedicated to training

1 centre

4 training **locations**

600 m²
of practical workshops

200 trainees instructed in virtual classes **NEW**

An innovation with many advantages!

Distance learning courses - organised as virtual classes - lasting no more than two hours prevent staff from having to move as the training can be accessed from each work station via the Internet and a telephone.

Saving time and money: training possible from the workplace to reduce costs.

Focus: especially suitable for a selective, targeted need.

Interactivity: discussion with the attendee is made easier.

User-friendly: quizzes or surveys during the training.

Aldes Training obtained ISO 9001 certification.

Aldes Training obtained CERTIBAT certification.

View the Aldes training brochure and schedule at **www.services.aldes.com** heading "Aldes training courses".

Contact us by e-mail: aldes.formation@aldes.com, by telephone: 04 42 32 77 66

SHOPS
COMPACT HEAT RECOVERY VENTILATION SOLUTION

VEX200
air handling unit

CO_2 sensor Sens
Measure the CO_2 to adapt the fresh air to the occupation of the premises

Twisted range
Swirl jet
air diffusion

VÉLONE roof fan
For smoke and heat exhaust from commercial buildings

OPTONE
Tailor-made safety solution
Smoke exhaust damper

ISONE® 2 Circular
Fire dampers for compartmentation

OFFICES
MODULAR HEAT RECOVERY VENTILATION SOLUTION

VEX4000
air handling unit

EasyVEC®
Box fan

ProtectONE® R
Smoke and heat exhaust box fan, available in ten sizes, that can cover a wide range of airflows, from 500 to 21,000 m³/h

ISONE® 2 Rectangular
Fire dampers for compartmentation

OPTONE
Tailor-made safety solution
Smoke exhaust damper

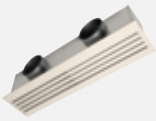

Lined Combined
Combined diffuser

BIM2
air diffusion grille

VMT Mod
Adapts the airflow according to the occupation to ensure good air quality and reduce energy consumption

HOTELS
C4 FIRE-RATED HEAT RECOVERY VENTILATION SOLUTION

VEX500-C4
air handling unit

AldesArchitect™
Adapt your diffusers and smoke and heat exhaust grilles to your environment with a tailor-made finish (imitation marble, wood, etc.)
"Exclusive to Aldes"

OPTONE
Tailor-made safety solution
Smoke exhaust damper

EDUCATION
REDUCED-SIZE HEAT RECOVERY VENTILATION SOLUTION

VEX600 air handling unit.
The purification solution that makes sure your pupils are concentrating due to good air quality, low noise level and the lack of air inlets that can cause noise and thermal discomfort.
VEX600 is also easier to install given a reduced floor area.

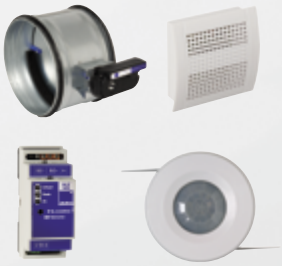

VMT Mod
Adapts the airflow according to the occupation to ensure good air quality and reduce energy consumption.

GRIDLINED®
Air diffusion grille

AIR DIFFUSION

Full range designed to optimise the overall performance of the system and occupant comfort

SMALL SHOPS

TWISTED SERIES

- Discreet, unimposing design for seamless integration
- Excellent mixing rate
- Ideal for variable airflow systems

HOTEL ROOMS

GRIDLINED SERIES

- Wide range of dimensions available (height from 75 to 800 mm / Length from 20 cm to 100 m)
- Fixed or controllable airflow

Custom terminal range designed to blend into any environment

ALDESARCHITECT®

Colours, materials, forms, dimensions...
Everything is possible with AldesArchitect® !

OFFICES

LINED SERIES

- Identical products for air exhaust and supply
- Filtration possible on exhaust

HOSPITAL ROOMS

BIM 2 SERIES

- Available in white finish
- Wall or ceiling-mounted
- Air supply and exhaust

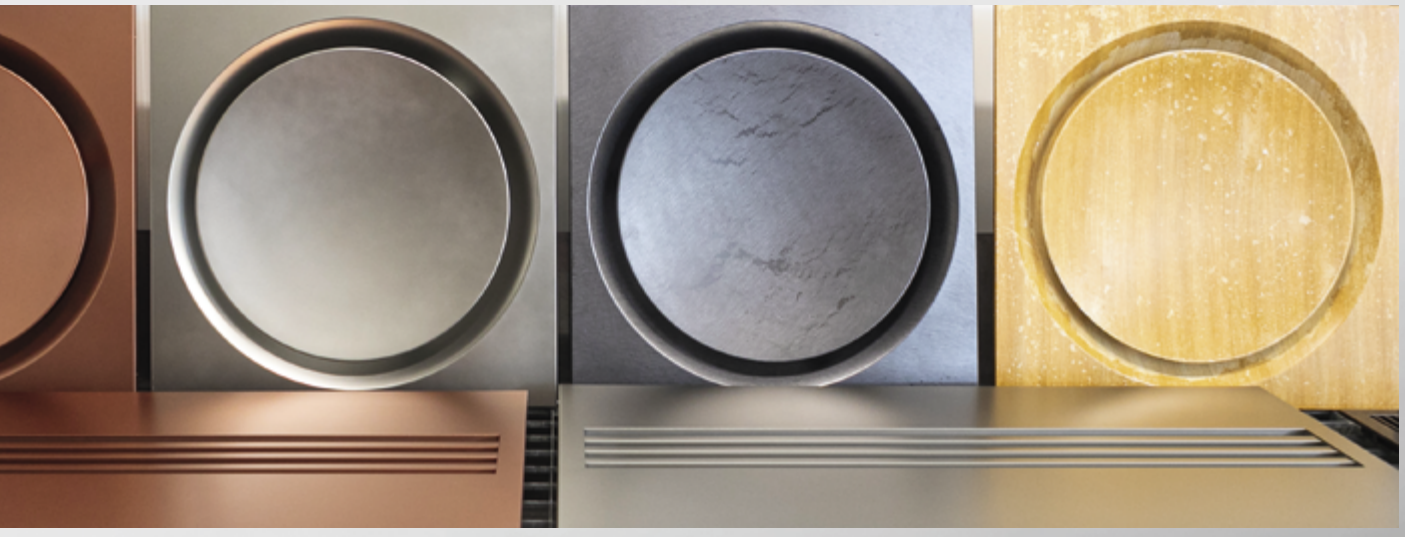

COMMERCIAL VENTILATION

Air handling units . . . . . **p. 28**
Selection guide . . . . . p. 26
Box fans . . . . . **p. 72**
Selection guide . . . . . p. 72
Other fans . . . . . **p. 94**
Accessories . . . . . **p. 110**

VEX500

High efficiency air handling unit

- **More effective:** high efficiency up to 95%.
- **More control:** zxclusive Aldes Smart Control system.
- **Easier to install and maintain:** factory pre-wiring, ultra-fast, reliable connection and access to components on the main panel.

→ Page 33

AIR HANDLING UNITS

Air handling unit selection guide **p. 26**

Counterflow heat exchangers

VEX300T **p. 28**

VEX600 **p. 30**

VEX500 **p. 33**

VEX500-C4 **p. 38**

VEX400 **p. 42**

DFE micro-watt **p. 45**

DFE Top micro-watt **p. 47**

False ceiling units

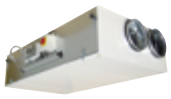
DFE compact micro-watt **p. 49**

VEX300C **p. 52**

Decentralised units

VEX308 **p. 54**

Rotary heat exchangers

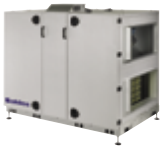
VEX200 **p. 56**

VEX700T **p. 58**

Modular units

VEX4000 **p. 62**

VEX5000 **p. 64**

Fresh air units

COMPO **p. 65**

Coils

Circular coils **p. 66**

External coils **p. 69**

BOX FANS

EasyVEC® Range selection guide and table **p. 72**

EasyVEC® Compact

EasyVEC® Compact micro-watt + **p. 76**

EasyVEC® Compact micro-watt **p. 78**

EasyVEC® Compact Standard **p. 80**

EasyVEC®

EasyVEC® micro-watt+ **p. 84**

EasyVEC® micro-watt **p. 87**

EasyVEC® Standard **p. 90**

Accessories

Accessories **p. 93**

OTHER FANS

Roof fans

TAHA horizontal discharge range **p. 94**

TAVA vertical discharge range **p. 96**

Accessories **p. 105**

Duct fan

VC range **p. 107**

Axial fan

HELICA **p. 109**

ACCESSORIES

Electrical Accessories

Single-phase voltage regulators **p. 110**

Electronic regulators **p. 111**

Three-phase autotransformer speed controller **p. 112**

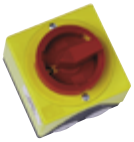
Controls **p. 114**

Safety devices **p. 116**

SELECTION GUIDES
AIR HANDLING UNITS

INSTALLATION	POSITION	PRODUCT SOLUTION	CONFIGURATIONS (1)	HEAT EXCHANGER TYPE (Crossed / Rotary / Counter-flow)	EUROVENT CERTIFICATION (2)	AIRFLOW MODELS AND RANGES (3) (300 … 7000)
INDOOR + OUTDOOR	EQUIPMENT ROOM AND TERRACE (OUTDOOR)	VEX200	H, SV	Rotary	AHU	240, 250, 260
		VEX400	H	Counter-flow	AAHE	410, 420, 430, 440
		VEX500	H	Counter-flow	AAHE	520, 525, 530, 540, 550, 560, 570, 580
		VEX500-C4	H	Counter-flow	AAHE	540-C4, 550-C4, 560-C4, 570-C4, 580-C4
		VEX4000	H, SV	Crossed, Rotary	AHU	4010, 4020
		VEX5000	H, SV	Crossed, Rotary	AHU	5020
		DFE	H	Counter-flow	AAHE	450, 800, 1200
INDOOR	EQUIPMENT ROOM	VEX300T	V	Counter-flow	AHU	310T, 320T, 330T, 340T, 350T
		VEX600	V	Counter-flow	AAHE	610, 620, 630, 640
		VEX700T	V	Rotary	AARE	720, 725, 740, 750, 760, 770
	SUSPENDED CEILING (WITH DUCTS)/APRON	DFE Top 450	V	Counter-flow	AAHE	450
		VEX300C	H		AHU	320C-1, 320C-2, 330C-2
		DFE Compact	H	Counter-flow	AAHE	450, 600, 1000, 1300, 1600, 2000
	PER ROOM (WITHOUT DUCTS)	VEX308	D	Counter-flow	AAHE	308

(1)
H Horizontal - 4 branch connectors in line.
V: Vertical - 4 branch connectors on top.
SV: Semi-vertical - Some models offer the possibility of 2 branch connectors on top and 2 branch connectors in line.
D: Decentralised - installation without ducts.

(2)
AAHE: Air-air plate heat exchanger certification programme: only the plate heat exchanger is Eurovent-certified.
AHU: Eurovent Certita Certification programme for air handling units: The complete unit is Eurovent-certified as well as the manufacturing site and selection software.

(3) Each dot indicates the Designation of the model produced with its approximative maximum airflow as per ErP 2018 at 200 Pa. The maximum airflows can be higher outside ErP 2018. The bars represent the operating range.
(4) These solutions are ideally suited for these types of application, but they can also meet other needs. The most appropriate solutions may vary depending on regional climates and building design choices.

Air handling units

Counterflow heat exchangers

VEX300T

PRODUCT ADVANTAGES

- *High-efficiency air handling units (up to 90%).*
- *Exclusive Aldes Smart Control® system.*
- *Optimum air quality and thermal comfort.*
- *Easy to install and activate.*
- *Software for product selection and performance calculations.*

COMPLIANCE

- *Certified Eurovent total AHU.*
- *Complies with VDI 6022.*
- *CE compliance.*
- *ErP*.*

RANGE

Designation	Reference
VEX310T	11058010
VEX320T	11058037
VEX330T	11058038
VEX340T	11058039
VEX350T	11058040

DESCRIPTION

- 5 models (up to 3,500 m³/ h.).
- Pre-wired monobloc units.
- Self-supporting construction with double-skin panels.
- 50 mm mineral wool insulation (density: 65 kg/m³).
- EN1886 values: D1, L1, L1, F9, T2, TB3.
- Total certified AHU and heat exchanger certified AAHE.
- Access to all components on main panel through doors and to control system via specific central hatch (removable as option).
- Stainless steel condensate collection tray.
- High-efficiency counterflow plate heat exchanger (up to 95%).
- EC motor with high-efficiency backward curve impeller.
- Adjustable 100% bypass.
- Panel filters coarse 65% (G4), ePM10 65% (M5) or ePM1 55% (F7) at exhaust and ePM10 65% (M5), ePM1 55% (F7) or ePM1 80% (F9) at fresh air.
- Pre-filters coarse 65% (G4), ePM10 65% (M5) or ePM1 55% (F7) as option.
- Built-in switch.
- Aldes Smart Control® / EXcon control (France, Norway, Sweden):

- Constant speed. - Constant airflow. - Constant pressure.
- Airflow control using CO_2/VOC sensor (0-10V signal).
- Controlled pressure.
- Built-in clock: operating hours can be controlled with timer
- Wired remote control system.
- BMS communication via Modbus RTU and Bacnet TCP/IP protocols.

- EXact2 control (others countries):

- Constant speed. - Variable speed. - Constant pressure.
- Airflow control using CO_2 / VOC sensor (0-10V signal).
- Wired remote control system.
- Option: Built-in web server.
- Option: BMS communication via Modbus RTU/RS485, Modbus TCP/IP, BACnet MSTP / BACnet IP.

- Smart de-icing by adjusting the opening of the by-pass or by pre-heating coil on extract air.
- Option can be dismantled fully for parts difficult to access.

FIELD OF APPLICATION

- Heat recovery ventilation for energy-efficient commercial buildings of all types: offices, schools, shops, etc.
- Filtration, pre-heating and cooling of supply air.

INSTALLATION

- Equipment rooms/cabinets.
- Indoors.
- Vertical duct connection.
- Circular branch connector connection.
- Customised drawings supplied with the unit (including accessories).

DIMENSIONS (mm) - WEIGHT (kg)

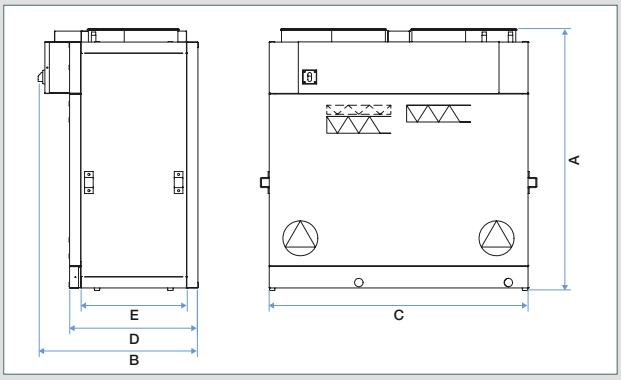

Model	A (mm)	B (mm)	C (mm)	D (mm)	E (mm)	Circular connection (mm)	Weight (kg)
VEX310T	1215	754	1200	595	490	Ø 250	157
VEX320T	1215	1024	1200	865	760	Ø 315	204
VEX330T	1474	1092	1500	932	827	Ø 315	265
VEX340T	1775	1092	1900	932	827	Ø 400	345
VEX350T	1825	1149	2400	990	885	Ø 500	415

ELECTRICAL CHARACTERISTICS

- All VEX300 are: 1 x 230 V + N + PE ~ 50 Hz.
- All electrical heaters: 3 x 400V.

AERAULIC CHARACTERISTICS

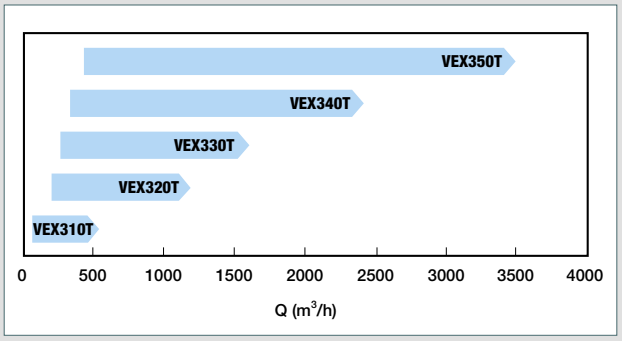

* Compliant with Eco-design Regulation 1253/2014

VEX300T

ACCESSORIES

- Motorised damper.
- Fresh air panel filters: ePM10 65% (M5), ePM1 55% (F7) and ePM1 80% (F9).
- Exhaust panel filters: coarse 65% (G4), ePM10 65% (M5) and ePM1 55% (F7).
- Outdoor sensors: CO_2, VOC, temperature and optics.

To ensure good indoor air quality and energy efficiency of your unit, we advise changing your 65% (G4)/ePM10 65% (M5) coarse filter every three months and your ePM1 55% (F7)/ePM1 80% (F9) filter every six months, or when the filter monitoring alarm is triggered. These intervals can vary according to the pollution level. For further information, please contact us.

AVAILABLE OPTIONS

- Built-in hot water coil.
- Built-in cold water coil.
- Built-in reversible water coil.
- Built-in electrical heater.
- Built-in de-icing electrical heater.
- Built-in direct expansion coil (condensation/evaporation).
- Version with or without Aldes Smart Control®.
- “Split” removable version with Aldes support.

SELECTION SOFTWARE

Use EXSelect Pro to calculate the full performance levels of VEX300T units.

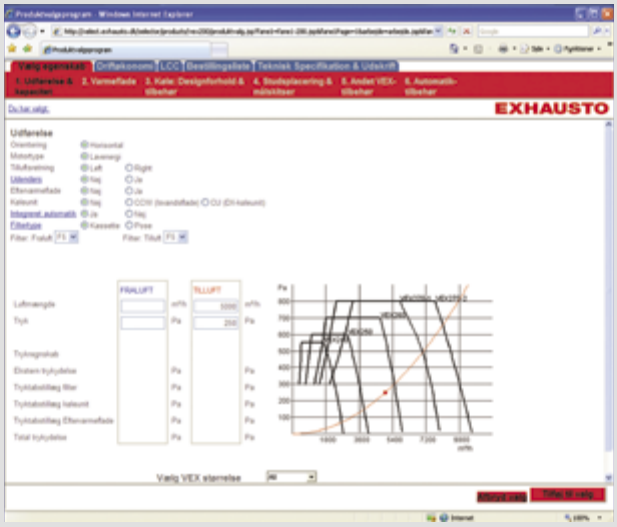

Air handling units

Counterflow heat exchangers

VEX600

PRODUCT ADVANTAGES

- *High-efficiency air handling units (up to 95%).*
- *Exclusive Aldes Smart Control® system.*
- *Optimum air quality and thermal comfort.*
- *Easy to install and activate.*
- *Excellent acoustic performance.*
- *Selector software specific to VEX for product selection and performance calculations.*

COMPLIANCE

- *Eurovent certified air-air counterflow heat exchanger as per the AAHE air-air heat exchanger programme.*
- *CE compliance.*
- *ErP (1).*

RANGE

Designation	Reference	Discount family
VEX610	11069010	*07*
VEX620	11069011	*07*
VEX630	11069012	*07*
VEX640	11069013	*07*
VEX610 Pre-painted	11050320	*07*
VEX620 Pre-painted	11050321	*07*
VEX630 Pre-painted	11050322	*07*
VEX640 Pre-painted	11050323	*07*

DESCRIPTION

- Pre-wired monobloc units with self-supporting construction with double-skin panels.
- Mineral wool insulation, 50 mm thick, density 40 kg/m^3.
- Access to all components via hinged doors on the front and to the control system via a specific central hatch.
- Aluminium or galvanised steel + paint coating condensate collection tray.
- Pre-painted steel exterior finish (RAL 9006 dark grey).
- Galvanised or pre-painted steel exterior finish depending on version.
- M0 galvanised steel Z275 interior finishes.
- High-efficiency counterflow plate heat exchanger up to 95% (AAHE-certified).
- EC motor with high-efficiency backward curve impeller.
- Adjustable 100% bypass.
- Panel filters G4 (ISO Coarse 60%) at exhaust and F7 (ISO ePM1 60%) at fresh air (standard).
- Filters M5 (ISO ePM10 50%) and F9 (ISO ePM1 90%) as option.
- Built-in switch.
- Aldes Smart Control® system:
  - Constant speed,
  - Constant airflow,
  - Constant pressure,
  - Airflow varied by CO_2/VOC sensor (signal 0-10 V),
  - Regulated pressure: optimum pressure control used to adapt pressure setpoint according to airflow measured, ensuring energy efficiency,
  - Built-in clock: operating hours can be controlled with timer.
- Configuration and monitoring via:
  - Remote touch-screen control,
  - Built-in web server,
  - BMS communication via ModbusTRU, Bacnet, TCP/IP protocols.
- Smart de-icing by adjusting the opening of the by-pass.

FIELD OF APPLICATION

- Heat recovery ventilation for energy-efficient commercial buildings of all types: offices, schools, shops, hotels, etc.
- Filtration, pre-heating and cooling of supply air.

INSTALLATION

- Equipment rooms/cabinets.
- Indoors.
- Vertical ducts connected by rectangular branch connectors.

(1) Compliant with Eco-design Regulation 1253/2014

RANGE

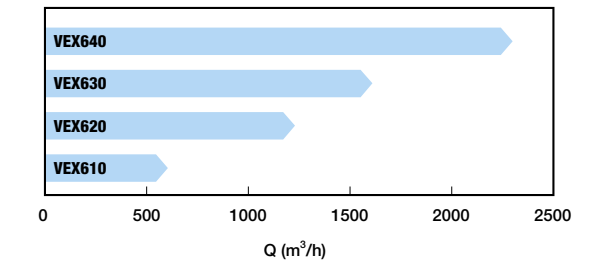

DIMENSIONS (mm) - WEIGHT (kg)

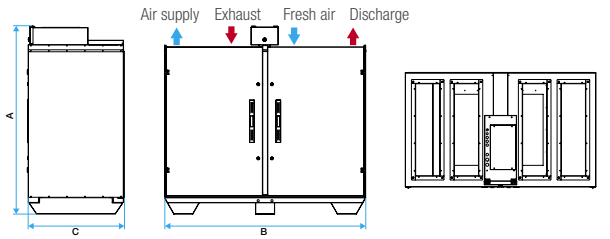

Dimensions and weights are given as a guide only. Make your selection in Selector VEX to obtain the actual characteristics of your unit.

Model	B (mm)	A (mm)	C (mm)	Branch connector size h x l (mm)	Weight (kg)
VEX610	1200	1255	569	190 x 435	165
VEX620	1200	1255	840	190 x 685	230
VEX630	1500	1433	909	240 x 765	290
VEX640	1900	1760	909	340 x 740	365

SELECTION SOFTWARE

Use SELECTOR VEX to define the full performance levels of VEX units.

VEX600

Make your selection in Selector VEX for the detailed data.

AERAULIC CHARACTERISTICS

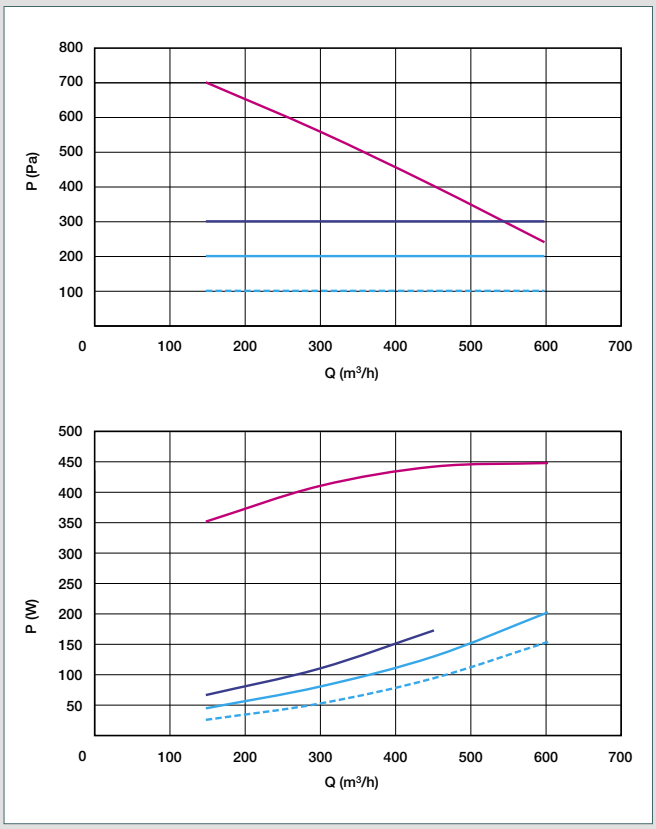

VEX610

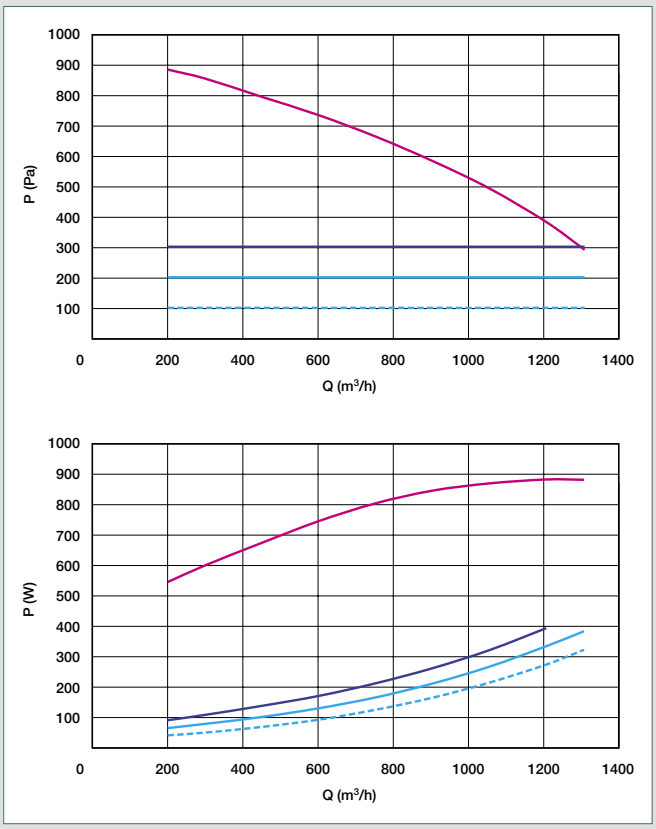

VEX620

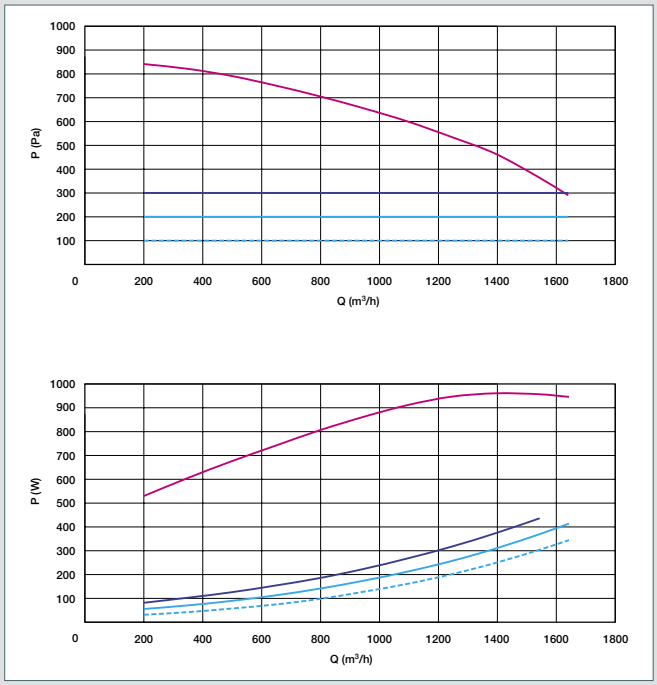

VEX630

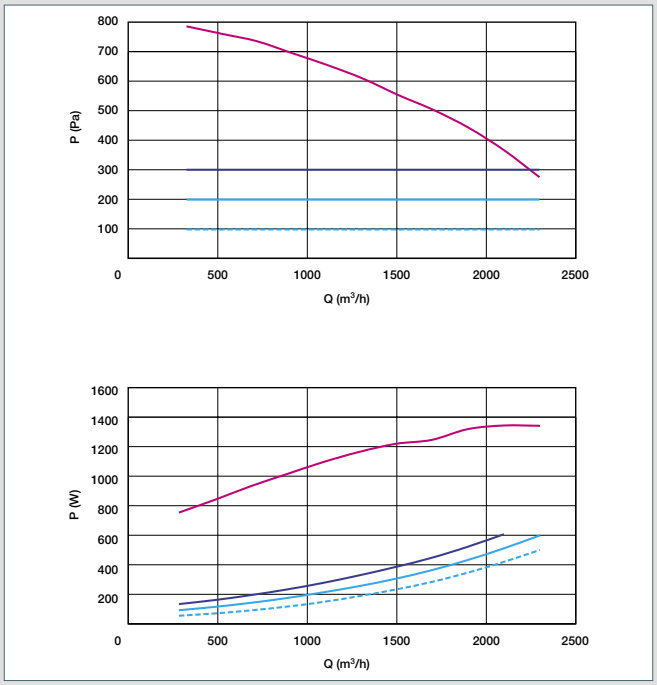

VEX640

- Aeraulic curves drawn up as per standard NF EN ISO 5801.
- P (Pa) = static pressure..
- P (W) = power consumption.

Air handling units

Counterflow heat exchangers

VEX600

ACCESSORIES

	VEX610	VEX620	VEX630		VEX640	
Motorised damper	11068452	11068451	11068450		11069018	
Rigid rectangular > circular connection	11068431	11068386	11068385		11068384	
Standard rectangular > circular flexible sleeve (separation)	11068417	11068416	11068415		11068414	
Insulated rectangular > circular flexible sleeve (separation+ insulation)	11068349	11068348	11068347		11068346	
Panel filter F7 (ePM1 60%) KIT	11100289 (AN/AE)	11100290 (AN/AE)	11100433 (AE)	11069058 (AN)	11069058 (AE)	11069059 (AN)
Filter G4 (Coarse 65%) Fresh air/Extract air KIT	11100291 (AN/AE)	11100292 (AN/AE)	11100435 (AE)	11069066 (AN)	11069066 (AE)	11069067 (AN)
High-efficiency filter F7 (ePM1 60%) Fresh air Kit	11100293 (AN)	11100426 (AN)	11100427 (AN)		11100428 (AN)	
F9 (ePM1 90%)	11100746	11100747	11100740		11100741	
M5 (ePM10 50%) Fresh air/Extract air	11100552	11100736	11100737 (AE)/11100554 (AN)		11100554 (AE)/11100555 (AN)	

AN: Fresh air
AE: Extract air

To ensure good indoor air quality and energy efficiency of your unit, we advise changing your G4/M5 filter every three months and your F7/F9 filter every six months, or when the filter monitoring alarm is triggered. These intervals can vary according to the pollution level.
For further information, please contact us.

Air handling units

Counterflow heat exchangers

VEX500

RANGE

Designation	Reference	Discount family
VEX520	11069001	*07*
VEX525	11069002	*07*
VEX530	11069003	*07*
VEX540	11069004	*07*
VEX550	11069005	*07*
VEX560	11069006	*07*
VEX570	11069007	*07*
VEX580	11069008	*07*
VEX520 Pre-painted	11050326	*07*
VEX525 Pre-painted	11050327	*07*
VEX530 Pre-painted	11050328	*07*
VEX540 Pre-painted	11050329	*07*
VEX550 Pre-painted	11050330	*07*
VEX560 Pre-painted	11050331	*07*
VEX570 Pre-painted	11050332	*07*
VEX580 Pre-painted	11050333	*07*

DESCRIPTION

- Pre-wired monobloc units with self-supporting construction with double-skin panels.
- Mineral wool insulation, 50 mm thick, density 40 kg/m³.
- Access to all components via hinged doors on the front and to the control system via a specific central hatch.
- Factory-mounted monobloc cowl for outdoor versions.
- Access doors in pre-painted dark grey steel (RAL 7016).
- Galvanised or pre-painted steel exterior finish (RAL 9006) depending on version.
- M0 galvanised steel Z275 interior finishes.
- High-efficiency counterflow plate heat exchanger up to 95% (AAHU-certified).
- EC motor with high-efficiency backward curve impeller.
- Adjustable 100% bypass.
- Panel filters G4 (ISO Coarse 60%) at exhaust and F7 (ISO ePM1 60%) at fresh air (standard).
- Filters M5 (ePM10 50%) and F9 (ePM1 90%) as option.
- Built-in switch.
- Aldes Smart Control® system:
  - Constant speed,
  - Constant airflow,
  - Constant pressure,
  - Airflow varied by CO_2/VOC sensor (signal 0-10 V),
  - Regulated pressure: optimum pressure control used to adapt pressure setpoint according to airflow measured, ensuring energy efficiency,
  - Built-in clock: operating hours can be controlled with timer.
- Configuration and monitoring via:
  - Remote touch-screen control,
  - Built-in web server,
  - BMS communication via ModbusTRU, Bacnet, TCP/IP protocols.
- De-icing by electrical heater on extract air or SMART de-icing by adjusting the opening of the by-pass.

FIELD OF APPLICATION

- Heat recovery ventilation for energy-efficient commercial buildings of all types: offices, schools, shops, hotels, etc.
- Filtration, pre-heating and cooling of supply air.

INSTALLATION

- Equipment rooms/flat roofs.
- Indoors/outdoors.
- In-line ducts connected by rectangular branch connectors.
- Choice of left or right side for ancillaries.

(1) Compliant with Eco-design Regulation 1253/2014

PRODUCT ADVANTAGES

- *High-efficiency air handling units (up to 95%).*
- *Exclusive Aldes Smart Control® system.*
- *Optimum air quality and thermal comfort.*
- *Easy to install and activate.*
- *Selector software specific to VEX for product selection and performance calculations.*

COMPLIANCE

- *Eurovent certified air-air counterflow heat exchanger as per the AAHE air-air heat exchanger programme.*
- *CE compliance.*
- *ErP (1).*

RANGE

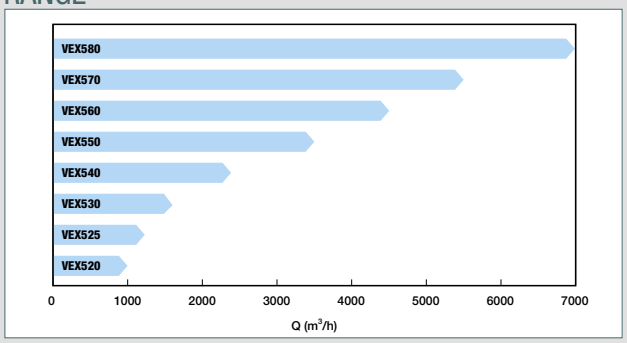

DIMENSIONS (mm) - WEIGHT (kg)

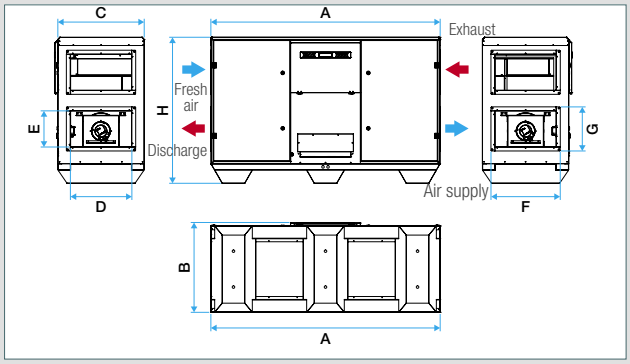

Dimensions and weights are given as a guide only. Make your selection in Selector VEX to obtain the actual characteristics of your unit.

Model	H (mm)	B (mm)	A (mm)	Branch connector size h x l (mm)	Connection size h x l (mm)	Weight (kg)
VEX520	1161	589	1823	284x384	340x440	205
VEX525	1161	714	1823	284x484	340x540	239
VEX530	1161	914	1823	284x684	340 x 740	291
VEX540	1470	913	2126	384x584	440x640	366
VEX550	1470	1292	2126	384x884	440x940	494
VEX560	1693	1271	2503	484x884	540x940	554
VEX570	1693	1549	2503	484x1184	540x1240	660
VEX580	1693	1827	2628	484x1384	540x1440	840

SELECTION SOFTWARE

Use SELECTOR VEX to define the full performance levels of VEX units.

Air handling units

Counterflow heat exchangers

VEX500

		User menu	Advanced menu Secure access	Expert menu Secure access
Functions for optimum air quality				
Timer	Weekly internal timer for programming	✔	✔	✔
Fan adjustment	**Five control modes:** - Constant speed. - Constant airflow. - Constant pressure. - Airflow varied by CO_2/VOC sensor (signal 0-10 V) - Regulated pressure		✔	✔
	Possible imbalance between air supply and exhaust		✔	✔
	Slave mode possible		✔	✔
	Can be controlled via external contacts		✔	✔
Functions for optimum thermal comfort				
Temperature control	**Three temperature control methods:** - Constant exhaust T°C - Constant air supply T°C - Constant T°C delta between air supply and exhaust.		✔	✔
By-pass adjustment	**Cooling via automatic opening of the by-pass, depending on outdoor conditions** - Free cooling function - Night cooling function		✔	✔
Smart de-icing	**Prevention of risk of heat exchanger freezing** - Adjusted by-pass opening control - Proportional electrical heater control		✔	✔
Coil control	- Proportional coil control - Water coil anti-freeze management. - Temperature setpoint compensation based on outdoor temperature		✔	✔
Damper control	- Control of motorised dampers. - Closed when stopped (return spring).		✔	✔
Functions to provide optimised supervision				
Alarms	**Typology** - Various configurable alarms - Alarm forwarding by e-mail	✔	✔	✔
	Display - Current active alarms - Predicted alarms - Alarm log	✔	✔	✔
Verification of operational status	- Real-time display of operational status (filter pressure drops, ventilation airflows, pressures, etc.).	✔	✔	✔
	- Operational data log	✔	✔	✔
	- Update/backup of data using SD cards		✔	✔
	- Override mode for the various components for operational tests.			✔
After-sales commissioning	- Unit can be reconfigured on-site: reassignment of inputs/outputs, addition/removal of options.			✔
	- Recovery of factory settings		✔	✔
	- Possibility of advanced settings for each component		✔	✔

VEX500

Make your selection in Selector VEX for the detailed data.

AERAULIC CHARACTERISTICS

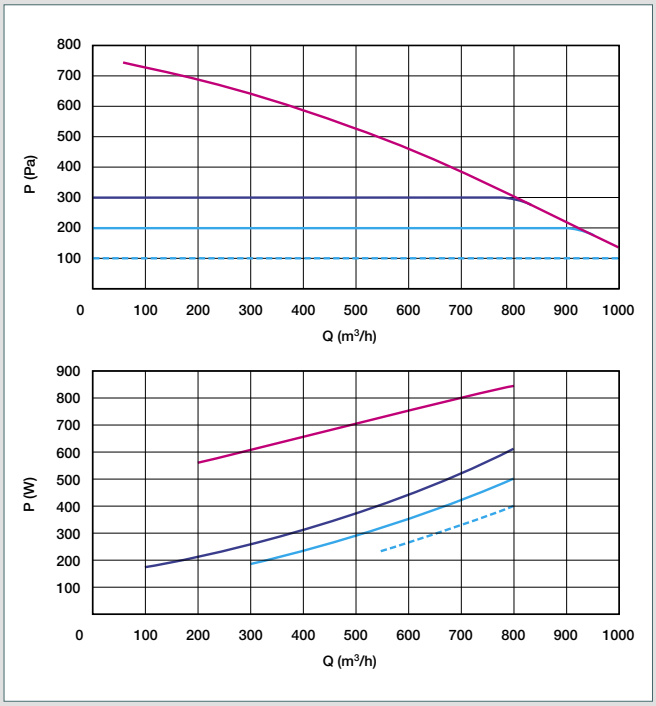

VEX520

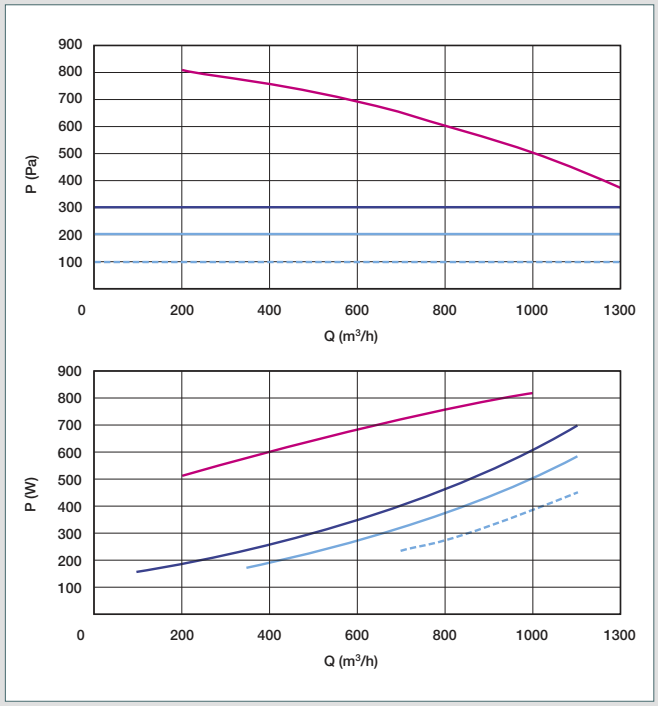

VEX525

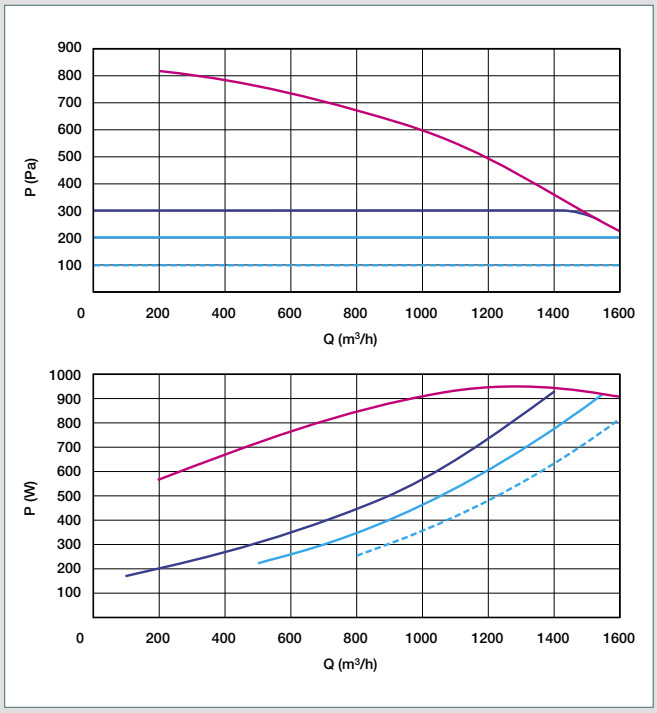

VEX530

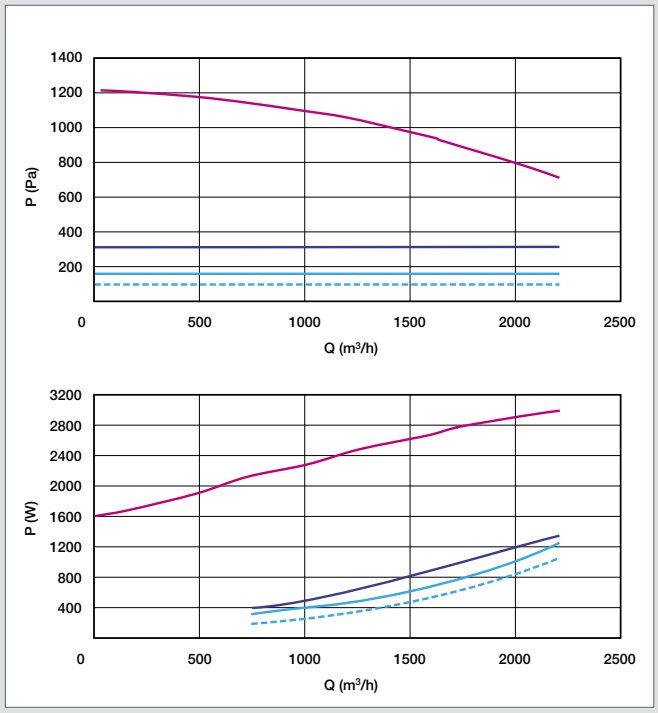

VEX540

- Aeraulic curves drawn up as per standard NF EN ISO 5801.
- P (Pa) = static pressure.
- P (W) = power consumption.

Air handling units

Counterflow heat exchangers

VEX500

AERAULIC CHARACTERISTICS

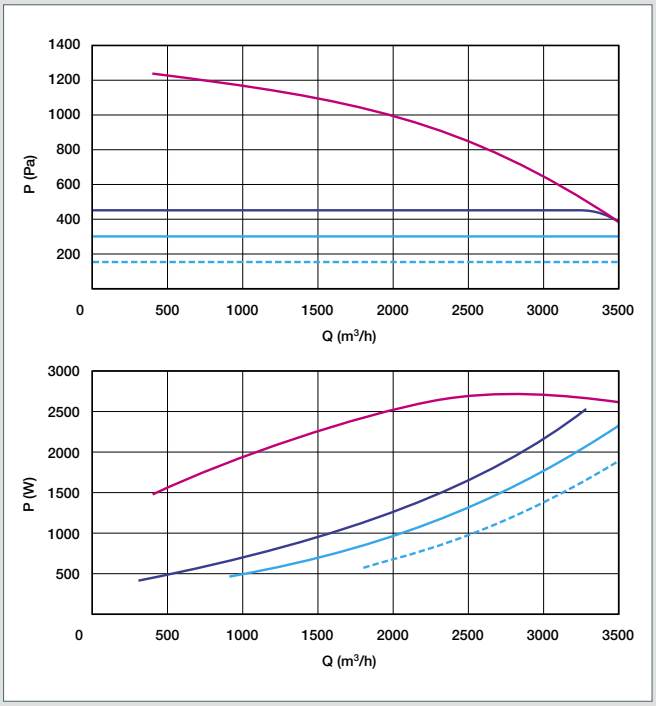

VEX550

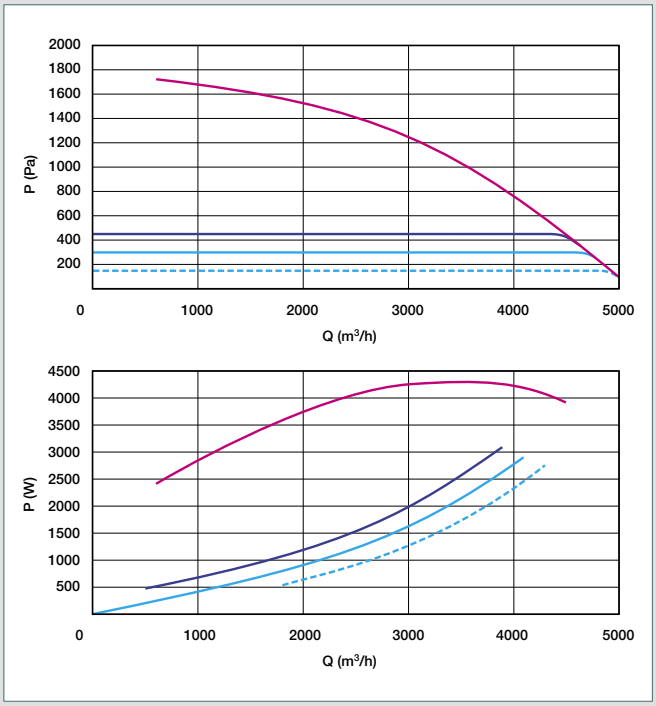

VEX560

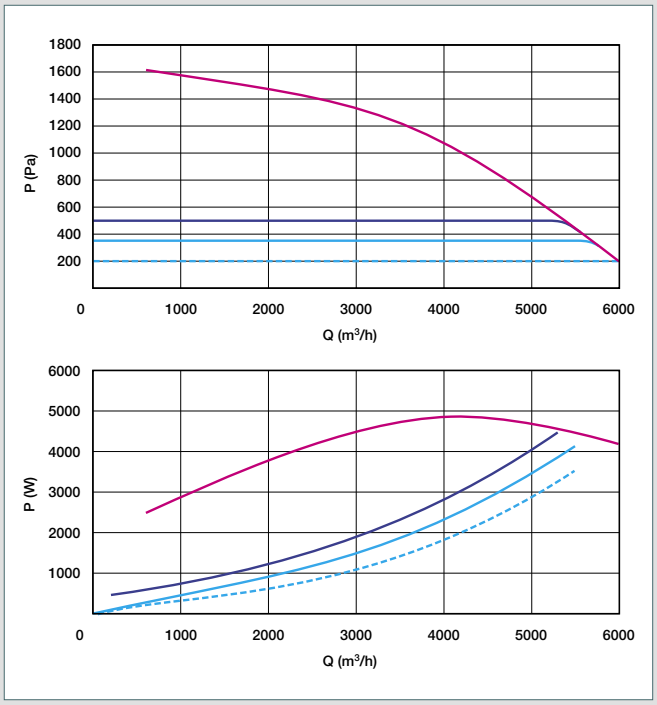

VEX570

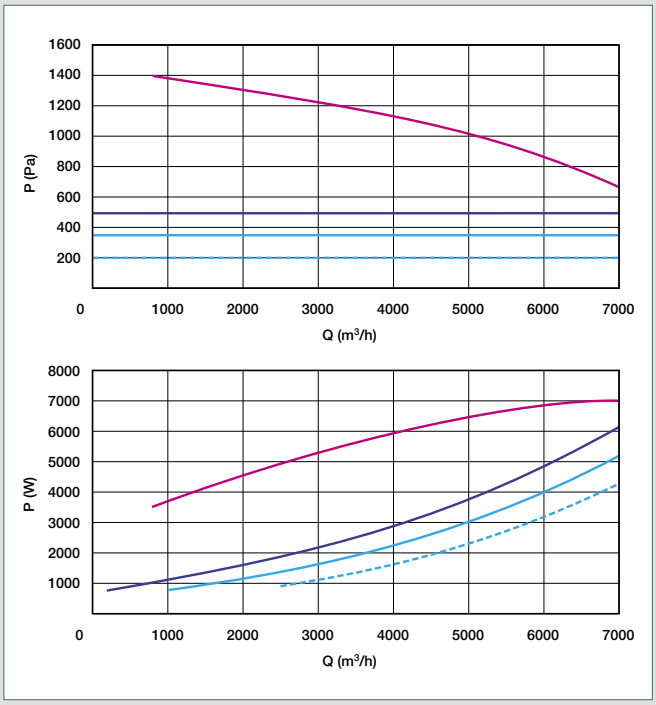

VEX580

- Aeraulic curves drawn up as per standard NF EN ISO 5801.
- P (Pa) = static pressure.
- P (W) = power consumption.

VEX500

ACCESSORIES

	VEX520	VEX525	VEX530	VEX540	VEX550	VEX560	VEX570	VEX580
Motorised damper	11069016	11069017	11069018	11069019	11069020	11069021	11069022	11069023
Rain hood	11069032	11069033	11069034	11069035	11069036	11069037	11069038	11069039
Rigid rectangular > circular connection	11069040	11069041	11069042	11069043	11069044	11069045	11069046	11069047
Standard rectangular > circular flexible sleeve	11069048	11069049	11069050	11069051	11069052	11069053	11069054	11069055
Panel filter F7 (ePM1 60%) Kit	11069056	11069057	11069058	11069059	11069060	11069061	11069062	11069063
High-efficiency panel filter G4 (coarse 65%) for F7 (ePM1 60%) Kit	11069064	11069065	11069066	11069067	11069068	11069069	11069070	11069071
High-efficiency filter F7 (ePM1 60%) Kit	11069072	11069073	11069074	11069075	11069076	11069077	11069078	11069079
Pre-filter G4 (Coarse 65%) kit	11069080	11069081	11069082	11069083	11069084	11069085	11069086	11069087
F9 (ePM1 90%)	11100738	11100739	11100740	11100741	11100742	11100743	11100744	11100745
M5 (ePM10 50%) Fresh air/Extract air	11100553	11100731	11100554	11100555	11100732	11100733	11100734	11100735

To ensure good indoor air quality and energy efficiency of your unit, we advise changing your G4/M5 coarse filter every three months and your F7/F9 filter every six months, or when the filter monitoring alarm is triggered. These intervals can vary according to the pollution level.
For further information, please contact us.

Air handling units

Counterflow heat exchangers

VEX500-C4 (fire-rated)

PRODUCT ADVANTAGES

- *Safety of the C4 combined with the benefits of the high-efficiency air handling (up to 95%).*
- *Exclusive Aldes Smart Control® system.*
- *Optimum air quality and thermal comfort.*
- *Easy to install and activate.*
- *Selector software specific to VEX for product selection and performance calculations.*

COMPLIANCE

- *Eurovent certified air-air counterflow heat exchanger as per the AAHE air-air heat exchanger programme.*
- *CE compliance.*
- *ErP (1).*

RANGE

Designation	Reference	Discount family
VEX540-C4	11069284	***07***
VEX550-C4	11069285	***07***
VEX560-C4	11069286	***07***
VEX570-C4	11069287	***07***
VEX580-C4	11069288	***07***
VEX540-C4 Pre-painted	11050338	***07***
VEX550-C4 Pre-painted	11050339	***07***
VEX560-C4 Pre-painted	11050340	***07***
VEX570-C4 Pre-painted	11050341	***07***
VEX580-C4 Pre-painted	11050342	***07***

DESCRIPTION

- Solution C4: 400°C for 1/2 hour (Ø 160 mm).
- Pre-wired monobloc units with self-supporting construction with double-skin panels.
- Mineral wool insulation, 50 mm thick, density 40 kg/ m³.
- Access to all components via hinged doors on the front and to the control system via a specific central hatch.
- Factory-mounted monobloc cowl for outdoor versions.
- Access doors in pre-painted dark grey steel (RAL 7016).
- Galvanised or pre-painted steel exterior finish (RAL 9006) depending on version.
- M0 galvanised steel Z275 interior finishes.
- High-efficiency counterflow plate heat exchanger up to 95% (AAHE-certified).
- EC motor with high-efficiency backward curve impeller.
- Adjustable 100% bypass.
- Panel filters G4 (ISO Coarse 60%) at exhaust and F7 (ISO ePM1 60%) at fresh air (standard).
- Filters M5 (ISO ePM10 50%) and F9 (ISO ePM1 90%) as option.
- Built-in switch.
- Aldes Smart Control® system:
  - Constant speed,
  - Constant airflow,
  - Constant pressure,
  - Airflow varied by CO_2/VOC sensor (signal 0-10 V),
  - Regulated pressure: optimum pressure control used to adapt pressure setpoint according to airflow measured, ensuring energy efficiency,
  - Built-in clock: operating hours can be controlled with timer.
- Configuration and monitoring via:
  - Remote touch-screen control,
  - Built-in web server,
  - BMS communication via ModbusTRU, Bacnet, TCP/IP protocols.
- De-icing by electrical heater on fresh air or imbalance of airflows.

FIELD OF APPLICATION

- Heat recovery ventilation for energy-efficient commercial premises: Collective housing, Residences, Residential commercial buildings, retirement homes, prisons, etc.
- Filtration, pre-heating and cooling of supply air.

INSTALLATION

- Equipment rooms/flat roofs.
- Indoors/outdoors.
- In-line ducts connected by rectangular branch connectors.
- Choice of left or right side for ancillaries.

(1) Compliant with Eco-design Regulation 1253/2014

RANGE

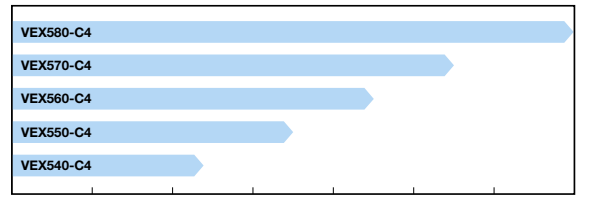

DIMENSIONS (mm) - WEIGHT (kg)

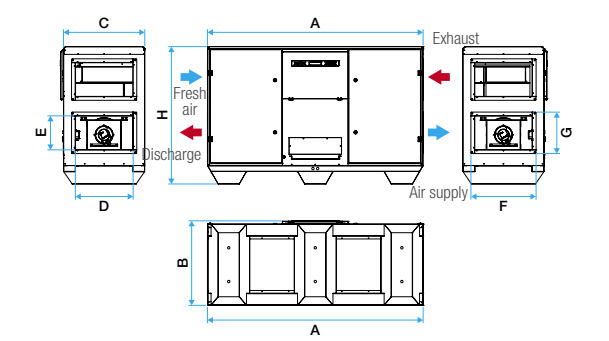

Dimensions and weights are given as a guide only. Make your selection in Selector to obtain the actual characteristics of your unit.

Model	H (mm)	B (mm)	A (mm)	Branch connector size h x l (mm)	Connection size h x l (mm)	Weight (kg)
VEX540-C4	1470	913	2126	384x584	440x640	366
VEX550-C4	1470	1292	2126	384x884	440x940	494
VEX560-C4	1693	1271	2503	484x884	540x940	554
VEX570-C4	1693	1549	2503	484x1184	540x1240	660
VEX580-C4	1693	1827	2628	484x1384	540x1440	840

SELECTION SOFTWARE

Use SELECTOR VEX to define the full performance levels of VEX units.

VEX500-C4 (fire-rated)

Make your selection in Selector VEX for the detailed data.

AERAULIC CHARACTERISTICS

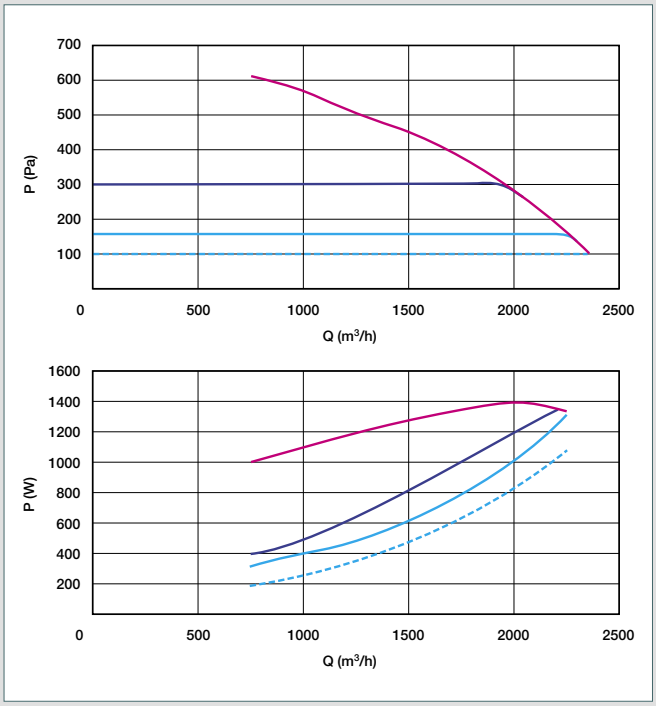

VEX540-C4

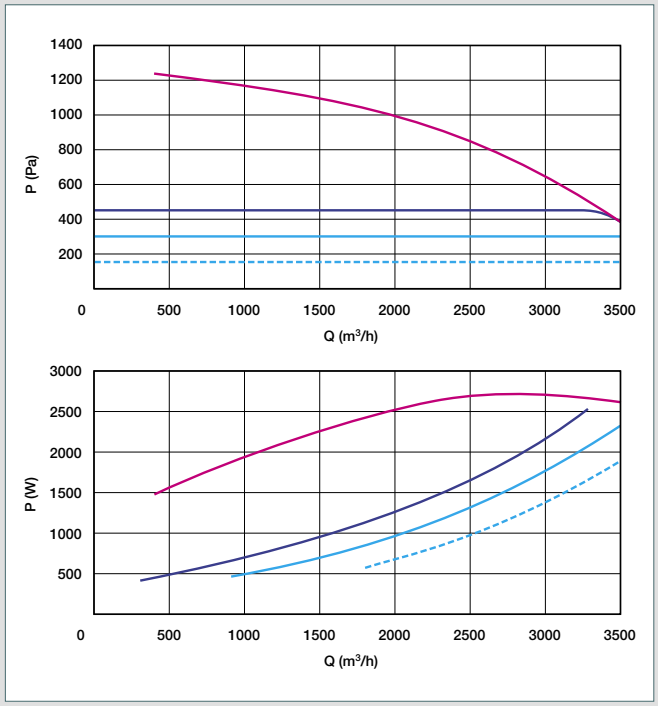

VEX550-C4

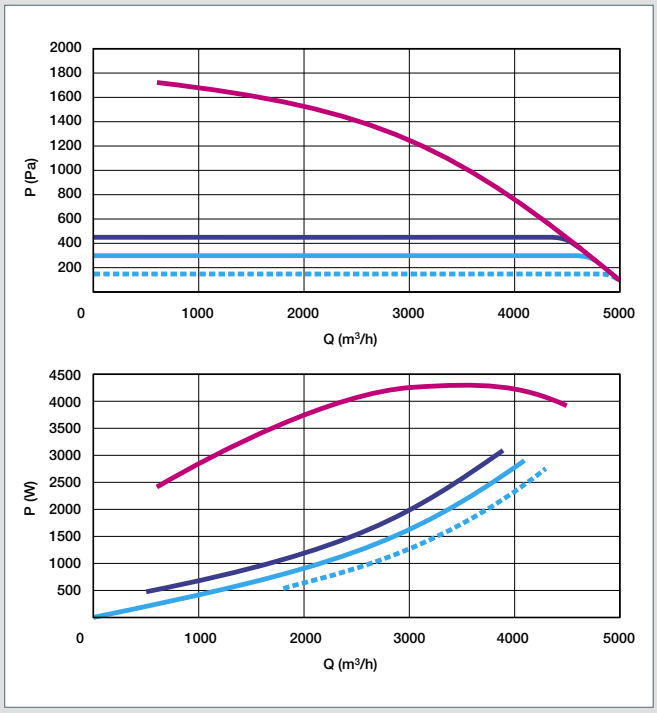

VEX560-C4

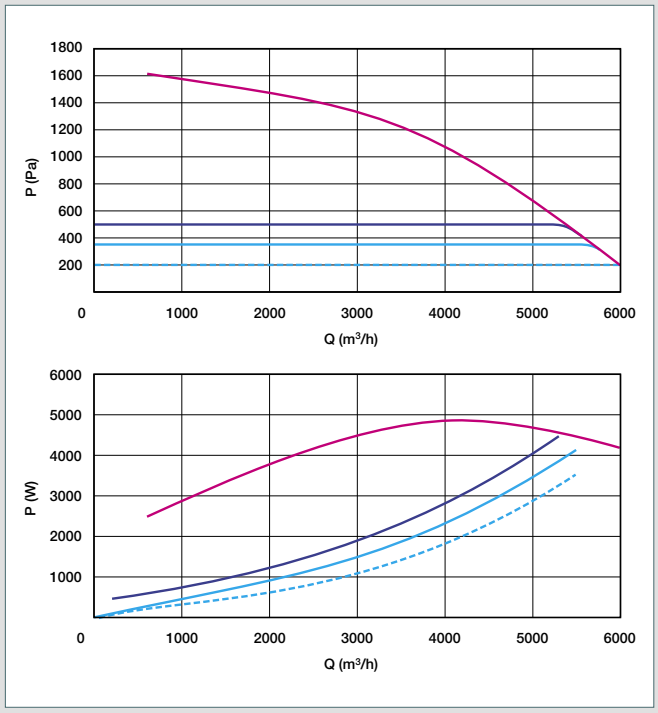

VEX570-C4

- Aeraulic curves drawn up as per standard NF EN ISO 5801.
- P (Pa) = static pressure.
- P (W) = power consumption.

Air handling units

Counterflow heat exchangers

VEX500-C4 (fire-rated)

AERAULIC CHARACTERISTICS (CONTINUED)

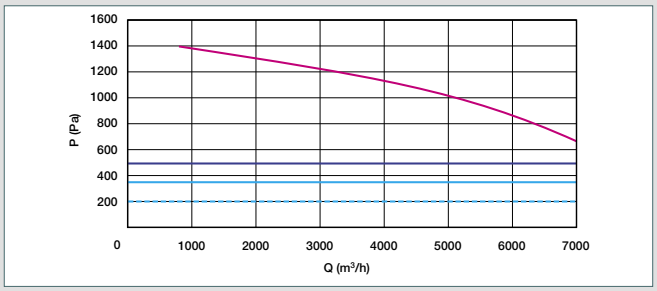

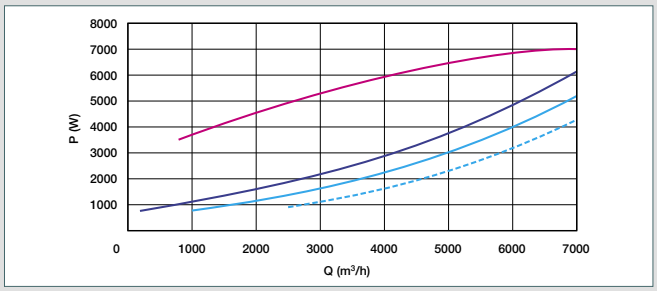

VEX580-C4

ACCESSORIES

	VEX540-C4	VEX550-C4	VEX560-C4	VEX570-C4	VEX580-C4
Motorised damper	11069019	11069020	11069021	11069022	11069023
Rain hood	11069035	11069036	11069037	11069038	11069039
Rigid rectangular > circular connection	11069043	11069044	11069045	11069046	11069047
Standard rectangular > circular flexible sleeve	11069051	11069052	11069053	11069054	11069055
Panel filter F7 (ePM1 60%) Kit	11069059	11069060	11069061	11069062	11069063
Panel filter G4 (Coarse 65%) Kit	11069067	11069068	11069069	11069070	11069071
Pre-filter G4 (Coarse 65%) kit	11069083	11069084	11069085	11069086	11069087
F9 (ePM1 90%)	11100741	11100742	11100743	11100744	11100745
M5 (ePM10 50%) Fresh air/Extract air	11100555	11100732	11100733	11100734	11100735

To ensure good indoor air quality and energy efficiency of your unit, we advise changing your G4/M5 coarse filter every three months and your F7/F9 filter every six months, or when the filter monitoring alarm is triggered. These intervals can vary according to the pollution level.
For further information, please contact us.

CENTRALISED PURIFICATION VEX500-C4
COLLECTIVE HOUSING

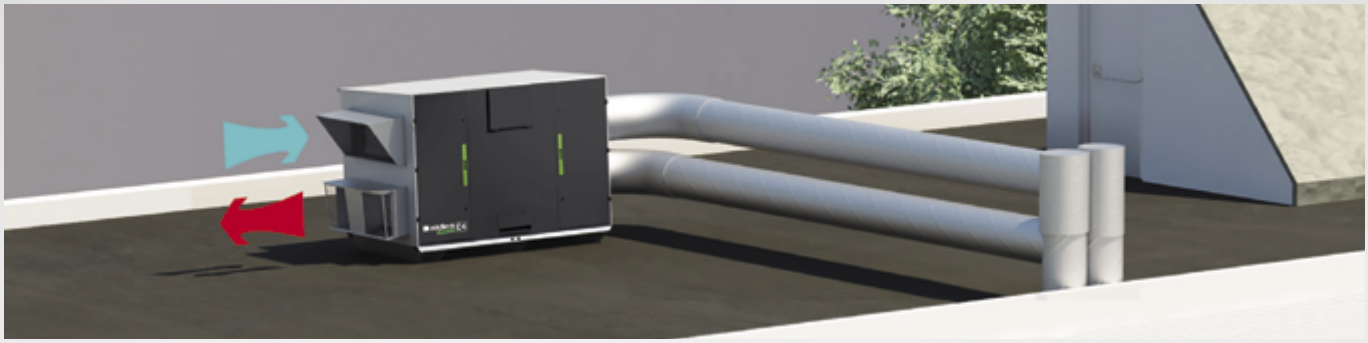

Provides better acoustic and thermal comfort for residents, whilst encouraging energy savings

Purify the air with a centralised installation

The C4-approved VEX500 air handling unit is a centralised heat recovery system which avoids having to fit additional fire dampers and therefore all maintenance operations.

NEW MOTORISED MR MAX

The **motorised MR MAX with a Belimo motor** provides synchronised air supply thanks to a time delay connected to an electric Bap'Si on the exhaust. Airflows are therefore fully balanced in each apartment.

Precise airflow control from 50 Pa (+/- 10 m³/h if ≤ 100 m³/h and +/- 10% if > 100 m³/h).
MIN. and MAX. airflows controlled by motor end stop screws.
Belimo motor LM230A to be ordered separately and installed on site.

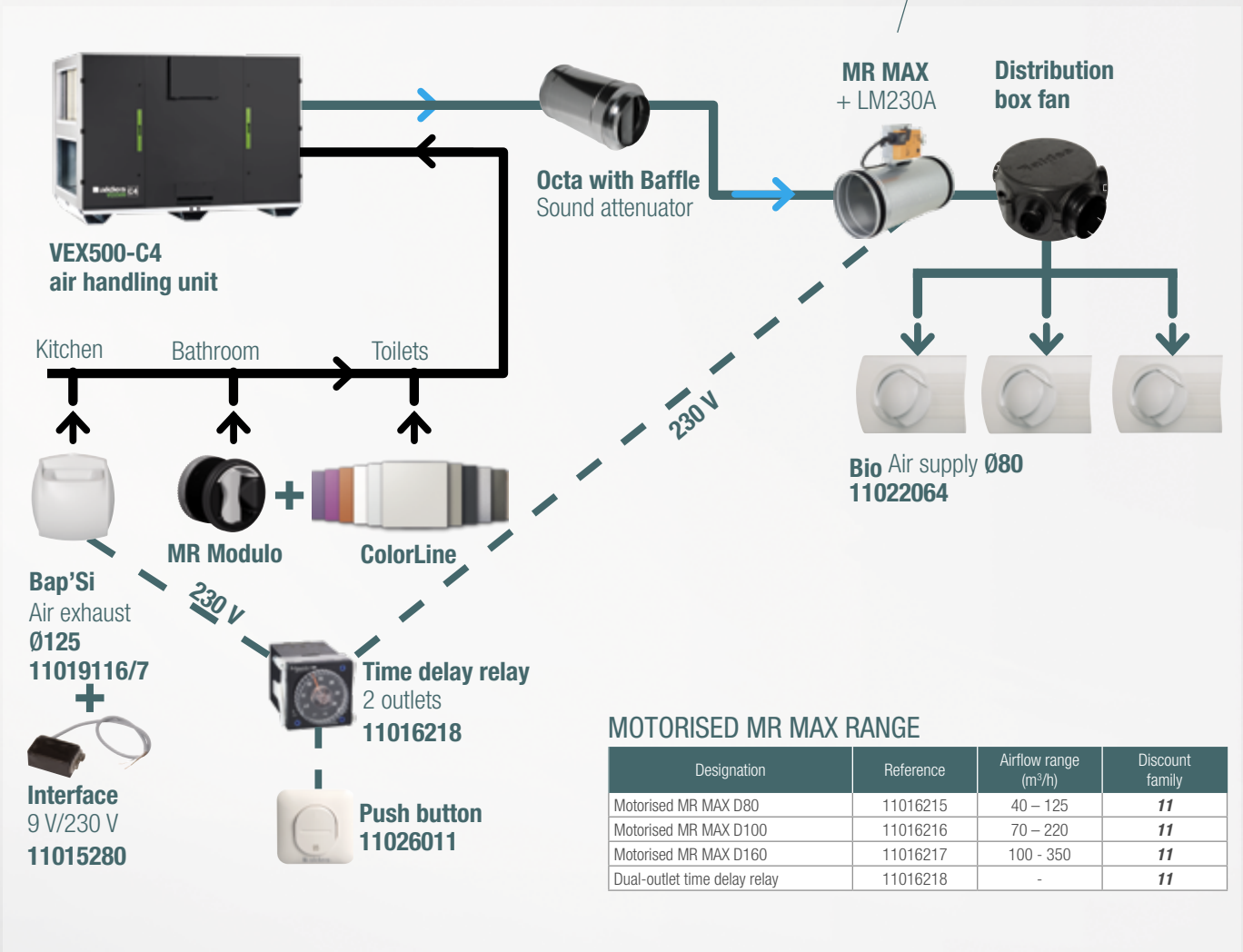

MOTORISED MR MAX RANGE

Designation	Reference	Airflow range (m³/h)	Discount family
Motorised MR MAX D80	11016215	40 – 125	***11***
Motorised MR MAX D100	11016216	70 – 220	***11***
Motorised MR MAX D160	11016217	100 - 350	***11***
Dual-outlet time delay relay	11016218	-	***11***

Air handling units

Counterflow heat exchangers

VEX400

RANGE

Designation	Reference	Discount family
VEX410	11060826	*07*
VEX420	11060827	*07*
VEX430	11060828	*07*
VEX440	11060829	*07*

DESCRIPTION

- 4 models up to 2,300 m^3/ h.
- 2 fixed models with reduced lead times.
- Pre-wired monobloc units.
- Self-supporting construction with double-skin panels.
- Mineral wool insulation, 50mm thick, density 40 kg/m^3.
- Access to all components via lift-off hinged doors on the front and to the control system via a specific central hatch.
- Aluminium condensate collection tray.
- Factory-mounted cowl for outdoor versions.
- M0 galvanised steel Z275 interior finishes.
- Counterflow plate heat exchanger up to 90% (AAHE-certified).
- EC motor with backward curve impeller.
- Adjustable by-pass.
- Panel filters G4 (Coarse 65%) or M5 (ePM10 50%) at exhaust, F7 (ePM1 60%) or M5 (ePM10 50%) at fresh air and pre-filters G4 (Coarse 65%).
- Monitoring filter clogging by timer (pressure switch optional).
- Built-in external switch.
- Aldes Classic control on calendar management:
  - Constant speed (3 speeds),
  - Speed varied by CO_2/VOC (signal 0-10 V),
  - Constant airflow and pressure optional.
- Configuration and monitoring via:
  - Wired remote control,
  - BMS via Modbus protocol RTU RS485 (BACnet, TCPIP and LON via a gateway (not supplied)).
- De-icing by by-pass or electrical de-icing coil as option.

FIELD OF APPLICATION

- Heat recovery ventilation for energy-efficient commercial buildings of all types: offices, schools, shops, etc.
- Filtration, pre-heating and cooling of supply air.

INSTALLATION

- Equipment rooms/flat roofs.
- Indoors/outdoors.
- In-line duct connection.
- Connection by standard rectangular branch connectors ("traditional" adapters as option).
- Choice of left or right side for ancillaries.

AVAILABLE OPTIONS

- Traditional rectangular > circular adapters.
- Non-insulated flexible sleeves.
- Motorised dampers.
- Rain hood.
- Panel filter G4 (Coarse 65%), M5 (ePM10 50%) Fresh air/Extract air or F7 (ePM1 60%).

(1) Compliant with Eco-design Regulation 1253/2014

PRODUCT ADVANTAGES

- *Quality-price balance.*
- *Performance and efficiency.*
- *Response to urgent needs.*
- *Coverage of slow airflows.*

COMPLIANCE

- *CE compliance.*
- *Compliant ErP 2018[1].*
- *Eurovent certified air-air counterflow heat exchanger as per air-air heat exchanger programme (AAHE).*

RANGE

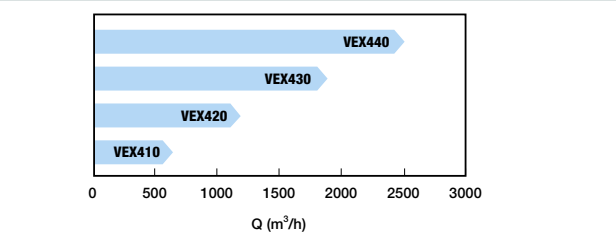

DIMENSIONS (mm) - WEIGHT (kg)

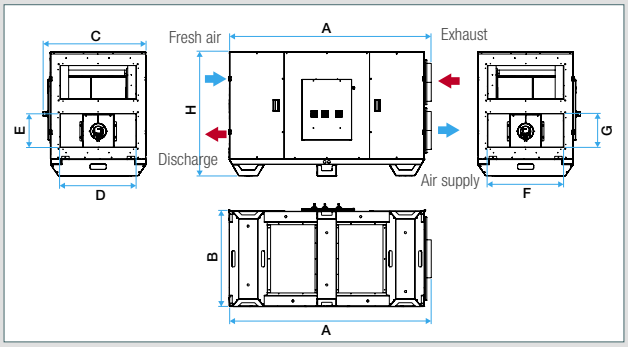

Dimensions and weights are given as a guide only. Make your selection in the Selector VEX software program to obtain the actual characteristics of your unit.

Model	A (mm)	B (mm)	H (mm)	Branch connector size F x G (mm)	Branch connector if circular adapter (Ø dia. mm)	Weight (kg)
VEX410	1505	578	974	440 x 240	250	160
VEX420	1822	578	1157	440 x 340	315	205
VEX430	1822	910	1157	740 x 340	355	291
VEX440	2126	910	1478	670 x 440	450	366

ELECTRICAL CHARACTERISTICS

All VEX400 units are 1 x 230V + N + PE ~ 50 Hz

SELECTION SOFTWARE

Use SELECTOR VEX to define the full performance levels of VEX units. Download free from our website.

VEX400

Make your selection in Selector VEX for the detailed data.

AERAULIC CHARACTERISTICS

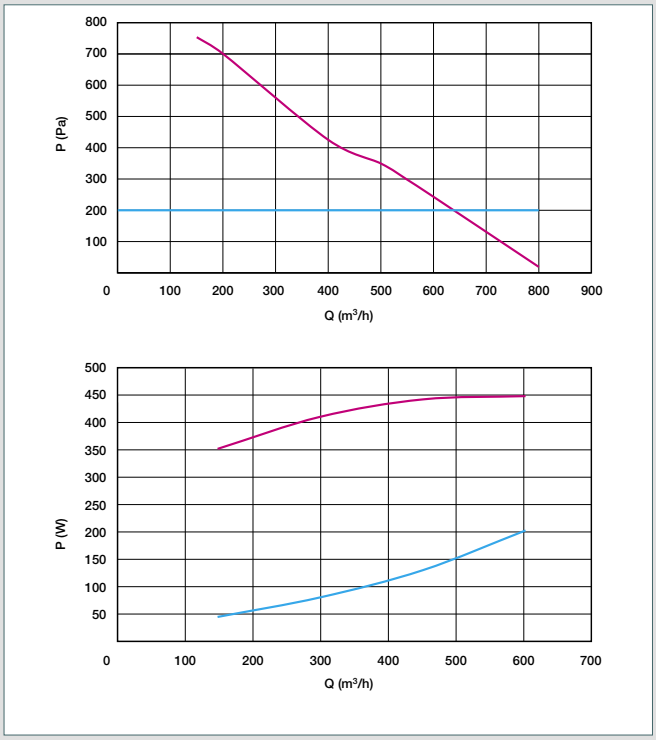

VEX410

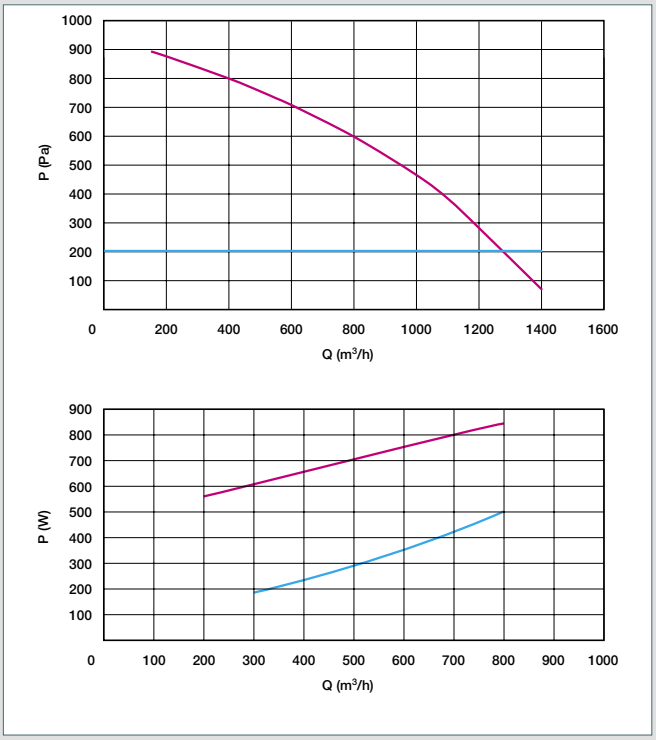

VEX420

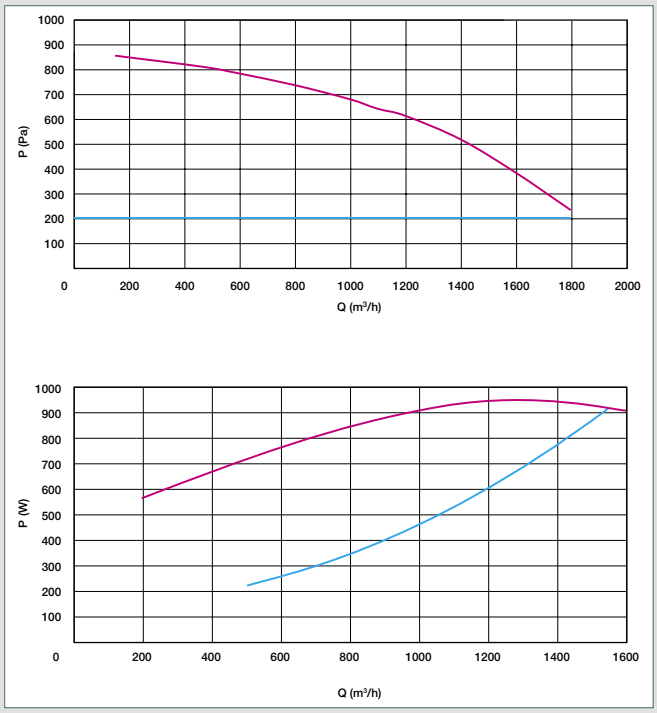

VEX430

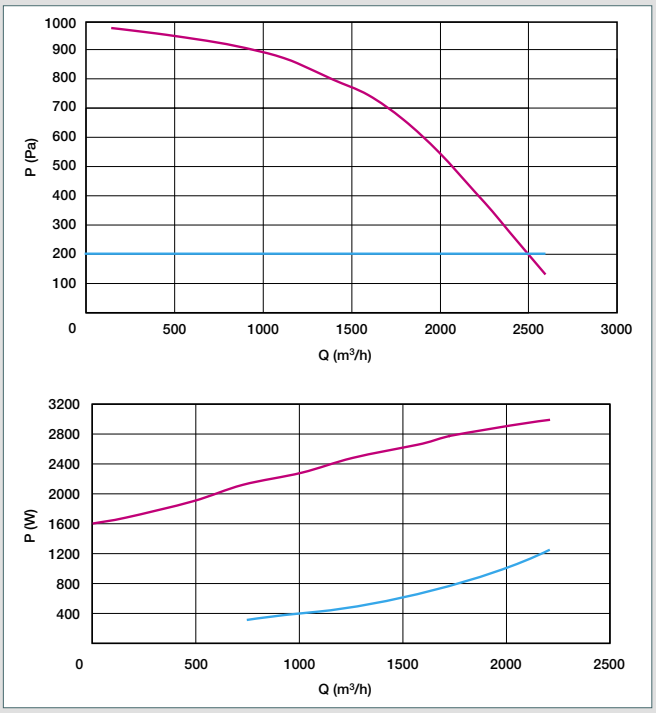

VEX440

- Aeraulic curves drawn up as per standard NF EN ISO 5801.
- P (Pa) = static pressure.
- P (W) = power consumption.

Air handling units

Counterflow heat exchangers

VEX400

ACCESSORIES

	VEX410	VEX420	VEX430	VEX440
Motorised damper	11072169	11069016	11069018	11069019
Rain hood	11072247	11069032	11069034	11069035
Rigid TRADITIONAL rectangular > circular connection	11072345	11072346	11072347	11072348
Standard rectangular > circular flexible sleeve (separation)	11072248	11069048	11069050	11069051
Filter G4 (Coarse 65%) Fresh air/Extract air Kit	11100291	11069064	11069066	11069067
Pre-filter M5 (ePM10 50%) Fresh air/Extract air Kit	11100552	11100553	11100554	11100555
Panel filter F7 (ePM1 60%) Fresh air Kit	11100289	11069056	11069058	11069059
Sens CO2 sensor	11017090			

Please contact us for other types of filter and pre-filter (M5, F9, etc.).
To ensure good indoor air quality and energy efficiency of your unit, we advise changing your G4/M5 filter every three months and your F7/F9 filter every six months, or when the filter monitoring alarm is triggered. These intervals can vary according to the pollution level.
For further information, please contact us.

Air handling units

Counterflow heat exchangers

DFE micro-watt

PRODUCT ADVANTAGES

- *High-efficiency heat exchanger.*
- *Low consumption EC motors.*
- *Plug and play.*
- *Motorised by-pass for free-cooling.*

COMPLIANCE

- *ESC-eiligible: BAR-TH25, BAR-TH26 and BAT-TH26 GT.*
- *Eurovent certified air-air counterflow heat exchanger as per the AAHE air-air heat exchanger programme.*
- *CE compliance.*
- *ErP [1].*

RANGE

Designation	Reference	Discount family
DFE 450 G4 WITHOUT RC	11060820	***07***
DFE 600 G4 WITHOUT RC	11060821	***07***
DFE 800 G4 WITHOUT RC	11060822	***07***
DFE 1200 G4 WITHOUT RC	11060823	***07***

DESCRIPTION

- 4 DFE models up to 1,200 m³/h.
- Plug & Play pre-wired monobloc unit.
- Box fan structure in anodised, extruded aluminium profile.
- 15 mm double-skin panels. DFE interior in galvanised steel.
- Rock wool thermal insulation.
- Very high-efficiency counterflow heat exchanger 90% and more (AAHE-certified).
- Centrifugal fans with EC motors.
- Full control via remote control unit:
  - Constant airflow (CA),
  - Constant pressure (CPs),
  - 0-10 V signal (LS).
- Motorised by-pass (70% on/off) enabling free-cooling.
- M5 (ePM10 55%) F7 (ePM1 60%) pleated panel filters (optional on fresh air).
- Proximity switch.
- Galvanised steel condensate collection tray.
- Built-in clock.
- Modbus RTU (option via SATModBus).
- Configuration via RC or GRC (optional accessories).

FIELD OF APPLICATION

- Heat recovery ventilation for energy-efficient commercial buildings.
- Filtration and pre-heating of supply air.

INSTALLATION

- Indoors in an attic or equipment room.

DIMENSIONS (mm) - WEIGHT (kg)

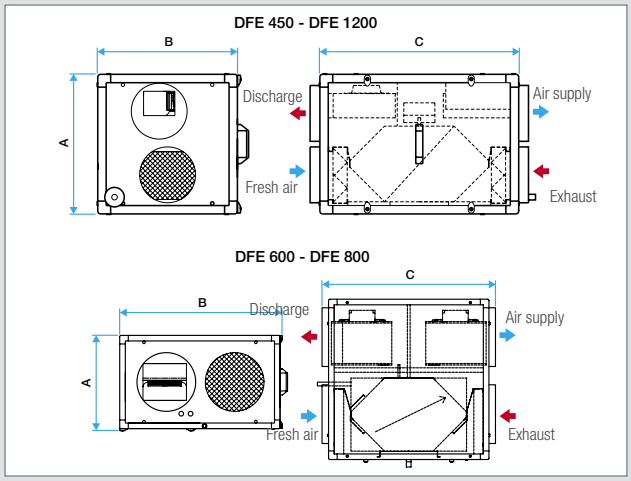

Through suitable positioning of the condensate discharge, the DFE 600 and DFE 800 models can easily be installed in a horizontal (on the side) or vertical (inside) configuration.

Dimensions and weights are given as a guide only. Make your selection in DFE Selector Suite to obtain the actual characteristics of your unit.

Model	A (mm)	B (mm)	C (mm)	Fresh air inlet or exhaust (mm)	Discharge or supply (mm)	Weight (kg)
DFE 450	500	500	712	Ø 200	Ø 200	73
DFE 600	500	860	860	Ø 250	Ø 250	103
DFE 800	500	860	860	Ø 315	Ø 315	119
DFE 1200	860	860	1000	338 x 798	Ø 355	173

ELECTRICAL CHARACTERISTICS

- EC motor IP44 Class B.
- Single-phase 230 V - 50 Hz power supply.

Model	Max. airflow (m³/h)	Impeller	Pmax fan (kW)	Pmax consumption at max. airflow (kW)	Imax (A)	Protection current (A)
DFE 450	470	Forward curve	2 x 0.24	2 x 0.21	2.9	1 x 8
DFE 600	630	Forward curve	2 x 0.23	2 x 0.17	3.1	1 x 8
DFE 800	840	Forward curve	2 x 0.54	2 x 0.28	3.7	1 x 8
DFE 1200	1260	Forward curve	2 x 0.6	2 x 0.42	5.4	1 x 8

SELECTION SOFTWARE

- Use SELECTOR DFE to define the full performance levels of DFE fan units.

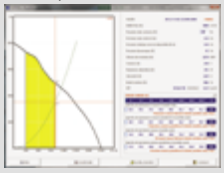

(1) Compliant with Eco-design Regulation 1253/2014

Air handling units

Counterflow heat exchangers

DFE micro-watt

AERAULIC AND ACOUSTIC CHARACTERISTICS

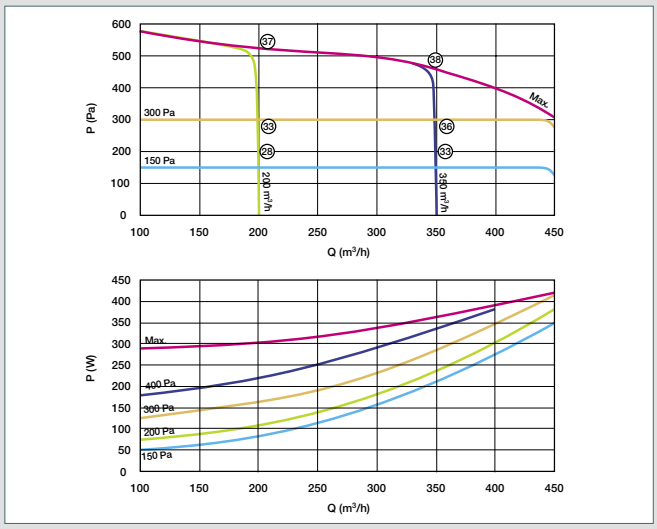

DFE 450 micro-watt

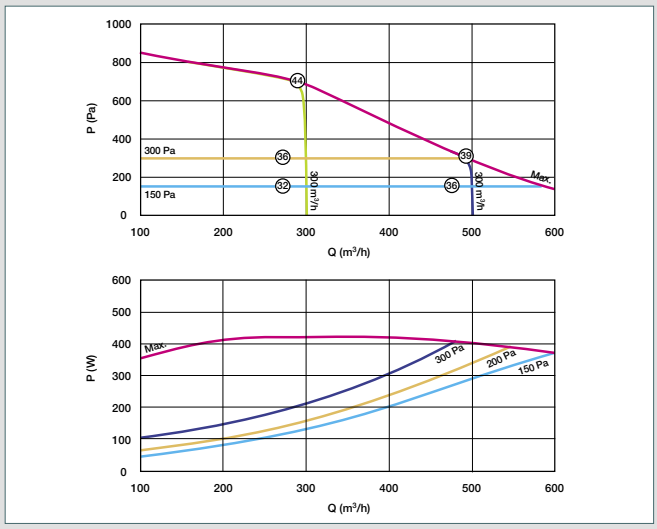

DFE 600 micro-watt

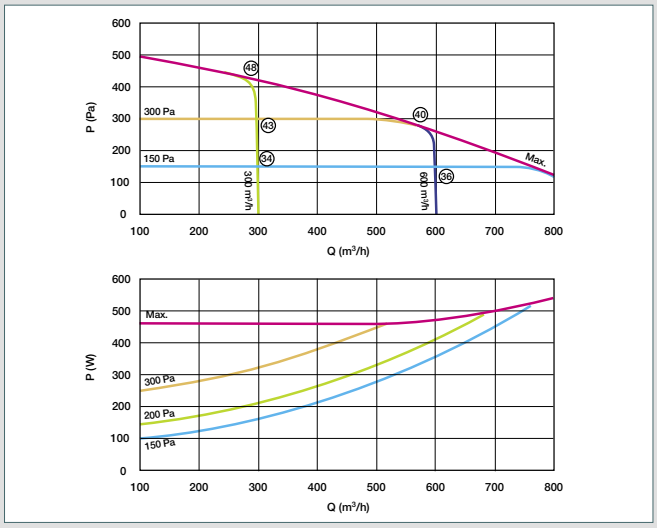

DFE 800 micro-watt

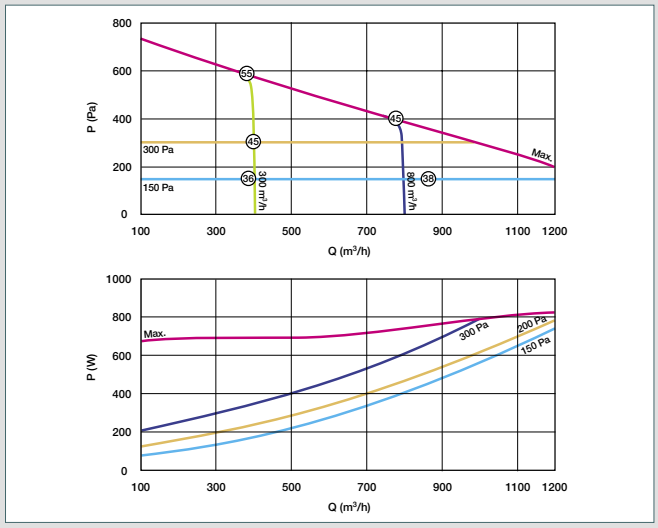

DFE 1200 micro-watt

- Aeraulic curves drawn up as per standard NF EN ISO 5801.
- = Lp in dB(A) – Overall sound pressure levels measured at 4 m from box fan with free discharge.
- P (Pa) = static pressure.

ACCESSORIES

Designation	Reference	Discount family
Spare filter kits		
FILTER G4 (Coarse 65%) DFE 600 (former) KIT	11100268	07
FILTER F7 (ePM1 60%) DFE/DFE+ TOP 450 KIT	11100231	07
FILTER F7 (ePM1 60%) DFE 600/800 KIT	11100232	07
FILTER F7 (ePM1 60%) DFE 1200 KIT	11100233	07
FILTER G4 (Coarse 65%) DFE/DFE+ TOP 450 KIT	11058100	07
FILTER G4 (Coarse 65%) DFE 800 (former) KIT	11058103	07
FILTER G4 (coarse 65%) DFE 600/800 KIT	11058166	07
FILTER G4 (coarse 65%) DFE 1200 KIT	11058167	07
Kit outdoor version		
DFE 450 VEX Kit	11058177	07
DFE 600 VEX Kit	11058178	07
DFE 800 VEX Kit	11058179	07
DFE 1200 VEX Kit	11058180	07
Flexible air intake sleeve		
MS Pro M0 Ø 315 mm	11094694	22
MS Pro M0 Ø 200 mm	11094692	22
MS Pro M0 Ø 250 mm	11094693	22

Designation	Reference	Discount family
MS Pro M0 Ø 355 mm	11094695	22
Flexible connectors		
RS 200	11096934	22
RS 250	11096935	22
RS 315	11096936	22
RS 355	11096937	22
Rectangular/circular adapter		
DFE 1200 adapter (Fresh air/exhaust) 338x798 -> Ø 355 mm	11058188	07
Control		
DFE pressure sensor kit	11058050	07
External coil SAT kit	11058443	07
SAT Modbus relay	11058442	07
SAT 3 relay	11058149	07
TACTouch remote touch-screen control	11069101	07
CO2 sensor	11017090	12
SAT WIFI DFE TAC 4/5	11060846	07
SAT Ethernet DFE TAC 4/5	11060847	07

NB: The SAT Modbus relay is not necessary for the connection to the remote control RC

Air handling units

Counterflow heat exchangers

DFE TOP micro-watt 450

PRODUCT ADVANTAGES

- *Airflow up to 450 m³/h.*
- *High-efficiency heat exchanger.*
- *Micro-watt motor.*
- *Minimal floor occupation.*
- *100% free-cooling.*
- *Optional built-in coils.*

COMPLIANCE

- *ESC-eiligible: BAR-TH25, BAR-TH26 and BAT-TH26 GT.*
- *Eurovent certified air-air counterflow heat exchanger as per the AAHE air-air heat exchanger programme.*
- *CE compliance.*
- *ErP [1].*

RANGE

Designation	Reference	Discount family
DFE Top 450	11060834	*07*

DESCRIPTION

- 1 DFE TOP model up to 450 m³/h.
- Plug & Play pre-wired monobloc unit.
- Box fan structure in aluminium profile.
- 15 mm double-skin panels. Inner wall made of galvanised steel.
- Class 1 internal airtightness and class 2 external (according to EN 13141-7).
- Very high-efficiency counterflow plate heat exchanger (90% and more) (AAHE-certified).
- Centrifugal fans with EC motors.
- Full control system including:
  - Constant airflow (CA),
  - Constant pressure (CPs),
  - 0-10 V signal (LS).
- Built-in clock.
- By-pass 70% on/off).
- Panel filters G4 (Coarse 65%) at exhaust and G4 (coarse 65%) at fresh air.
- Proximity switch.
- Stainless steel condensate collection tray.
- OPTION: communication with BMS in ModBus RTU protocol.
- Configuration and control via remote control (optional) or touch-screen (additional accessory).

FIELD OF APPLICATION

- HRV systems for energy-efficient commercial/commercial buildings.
- Filtration and pre-heating of supply air.

INSTALLATION

- Vertical.
- Equipment rooms.
- Indoors.
- Condensate discharge.

DIMENSIONS (mm) - WEIGHT (kg)

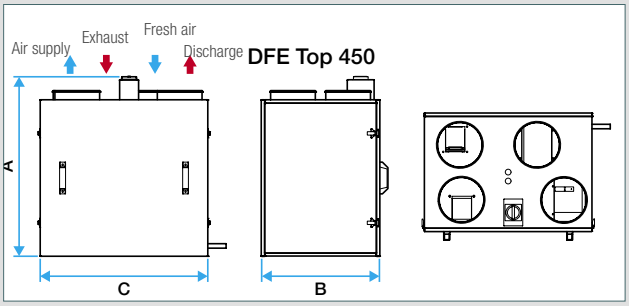

Dimensions and weights are given as a guide only. Make your selection in DFE Selector Suite to obtain the actual characteristics of your unit.

Model	A (mm)	B (mm)	C (mm)	Fresh air inlet or exhaust (mm)	Supply or discharge (mm)	Weight (kg)
DFE TOP 450	675	500	720	Ø 200	Ø 200	75

ELECTRICAL CHARACTERISTICS

- EC motor IP44 Class B.
- Single-phase 230 V - 50 Hz power supply.

Model	Max. airflow (m³/h)	Impeller	Pmax consumption at max. airflow (kW)	Imax (A)	Protection current (A)
DFE TOP 450	450	Forward curve	2 x 0.20	3.1	1 x 8 A

SELECTION SOFTWARE

- Use SELECTOR DFE to define the full performance levels of DFE fan units.

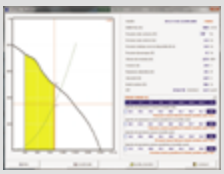

Air handling units

Counterflow heat exchangers

DFE TOP micro-watt 450

AERAULIC AND ACOUSTIC CHARACTERISTICS

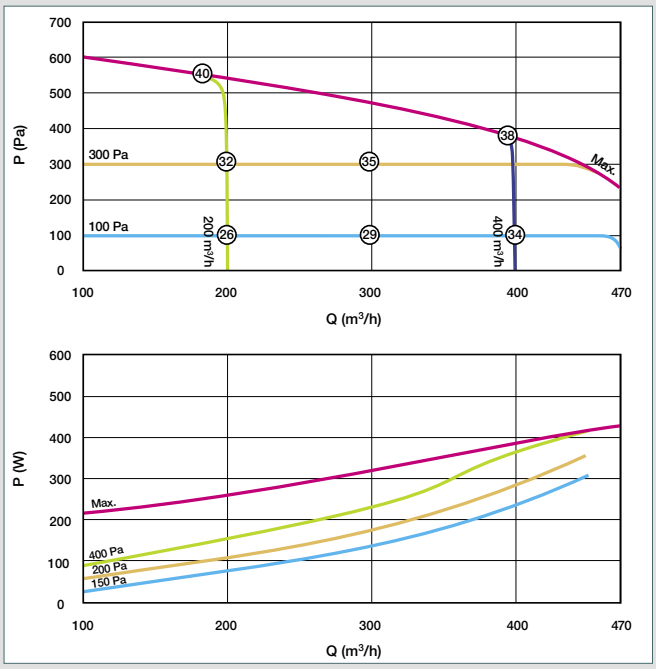

DFE TOP 450

- Aeraulic curves drawn up as per standard NF EN ISO 5801.
- = sound pressure level in dB (A) measured at 4 m from the box fan, discharge connected.
- P (Pa) = static pressure.
- P (W) = power consumption.

ACCESSORIES

Designation	Reference	Discount family
Spare filter kits		
FILTER F7 (ePM1 60%) DFE/DFE+ TOP 450 KIT	11100231	*07*
FILTER G4 (Coarse 65%) DFE+/DFE+ TOP 1200 KIT	11100244	*07*
FILTER G4 (Coarse 65%) DFE+/DFE+ TOP 2000 KIT	11100245	*07*
FILTER F7 (ePM1 60%) DFE+/DFE+ TOP 1200 KIT	11100249	*07*
FILTER F7 (ePM1 60%) DFE+/DFE+ TOP 2000 KIT	11100250	*07*
FILTER G4 (Coarse 65%) DFE/DFE+ TOP 450 KIT	11058100	*07*
FILTER G4 (Coarse 65%) DFE+/DFE+ TOP 800 KIT	11058117	*07*
FILTER F7 (ePM1 60%) DFE+/DFE+ TOP 800 KIT	11058096	*07*
Flexible air intake sleeve		
MS Pro V2 Ø 200 mm	11094296	*22*
Flexible connectors		
RS 200	11096934	*22*
Control		
DFE pressure sensor kit	11058050	*07*
SAT Modbus relay	11058442	*07*
SAT 3 relay	11058149	*07*
TACTouch remote touch-screen control	11069101	*07*
CO2 sensor	11017090	*12*
SAT WIFI DFE TAC 4/5	11060846	*07*
SAT Ethernet DFE TAC 4/5	11060847	*07*

NB: The SAT Modbus relay is not necessary for the connection to the remote control RC

* Compliant with Eco-design Regulation 1253/2014

Air handling units

False ceiling units

DFE compact micro-watt

PRODUCT ADVANTAGES

- *Airflow up to 2,000 m³/h.*
- *High-efficiency heat exchanger.*
- *Energy-efficient EC motor.*
- *Height 320 to 400 mm.*
- *Left and right access panel on request.*
- *Adjustable 100% bypass.*

COMPLIANCE

- *ESC-eiligible: BAR-TH25, BAR-TH26 and BAT-TH26 GT.*
- *Eurovent certified air-air counterflow heat exchanger as per the AAHE air-air heat exchanger programme.*
- *CE compliance.*
- *ErP 2018-compliant*.*

RANGE

Designation	Reference	Discount family
DFE COMPACT 450 LEFT-HAND WITHOUT HMI	11058470	07
DFE COMPACT 450 RIGHT-HAND WITHOUT HMI	11058290	07
DFE COMPACT 450 LEFT-HAND + KWIN WITHOUT HMI	11059094	07
DFE COMPACT 450 RIGHT-HAND + KWIN WITHOUT HMI	11058455	07
DFE COMPACT 600 LEFT-HAND WITHOUT HMI	11058291	07
DFE COMPACT 600 RIGHT-HAND WITHOUT HMI	11058466	07
DFE COMPACT 600 LEFT-HAND + KWIN WITHOUT HMI	11058456	07
DFE COMPACT 600 RIGHT-HAND + KWIN WITHOUT HMI	11059095	07
DFE COMPACT 1000 LEFT-HAND WITHOUT HMI	11058292	07
DFE COMPACT 1000 RIGHT-HAND WITHOUT HMI	11058467	07
DFE COMPACT 1000 LEFT-HAND + KWIN WITHOUT HMI	11058457	07
DFE COMPACT 1000 RIGHT-HAND + KWIN WITHOUT HMI	11059096	07
DFE COMPACT 1300 LEFT-HAND WITHOUT HMI	11059174	07
DFE COMPACT 1300 RIGHT-HAND WITHOUT HMI	11059175	07
DFE COMPACT 1300 LEFT-HAND + KWIN WITHOUT HMI	11059176	07
DFE COMPACT 1300 RIGHT-HAND + KWIN WITHOUT HMI	11059177	07
DFE COMPACT 1600 LEFT-HAND WITHOUT HMI	11058293	07
DFE COMPACT 1600 RIGHT-HAND WITHOUT HMI	11058468	07
DFE COMPACT 1600 LEFT-HAND + KWIN WITHOUT HMI	11058458	07
DFE COMPACT 1600 RIGHT-HAND + KWIN WITHOUT HMI	11059097	07
DFE COMPACT 2000 LEFT-HAND WITHOUT HMI	11058294	07
DFE COMPACT 2000 RIGHT-HAND WITHOUT HMI	11058469	07
DFE COMPACT 2000 RIGHT-HAND + KWIN WITHOUT HMI	11059098	07
DFE COMPACT 2000 LEFT-HAND + KWIN WITHOUT HMI	11058459	07

DESCRIPTION

- Plug & Play pre-wired monobloc unit.
- Left and right access panel available.
- 30 mm double-skin panels. Polystyrene thermal insulation (M1 rating).
- Very high-efficiency counterflow plate heat exchanger (up to 96%). (Eurovent AAHE).
- Low consumption EC motors.
- Full control system:
  - Constant airflow (CA),
  - Constant pressure (CPs),
  - 0-10 V signal (LS),
  - Constant torque (TQ).
- Pleated panel filter M5 (ePM10 55%). F7 (ePM1 60%) Fresh air optional.
- Full by-pass and adjustable.
- Proximity switch.
- Pre-installed and pre-wired condensate discharge pump.
- Optional: communication with BMS in RTU Modbus or KNX (requires SAT Modbus option).
- Configuration and control via remote control RC or touch-screen remote control TACTouch (additional accessory).
- Built-in clock.
- Stainless steel condensate collection tray.
- External post-heating electrical heaters, hot/cold water or DX available.
- Built-in electrical heaters.

FIELD OF APPLICATION

- Heat recovery ventilation for energy-efficient commercial buildings.
- Filtration and pre-heating of supply air.

INSTALLATION

- Horizontal.
- Indoors in a suspended ceiling.

* Compliant with Eco-design Regulation 1253/2014

DIMENSIONS (mm) - WEIGHT (kg)***

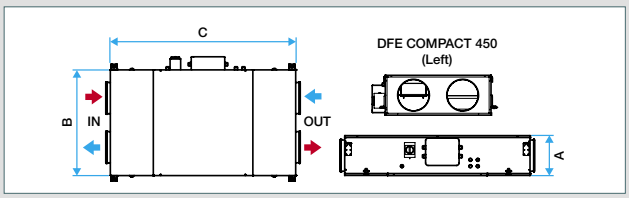

DFE Compact 450 micro-watt version gauche

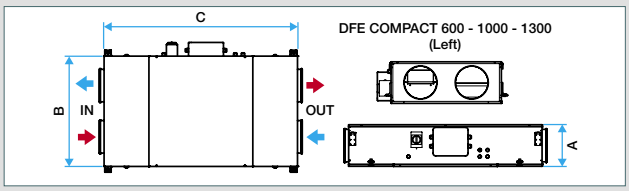

DFE Compact 600 -1000-1300 micro-watt version gauche

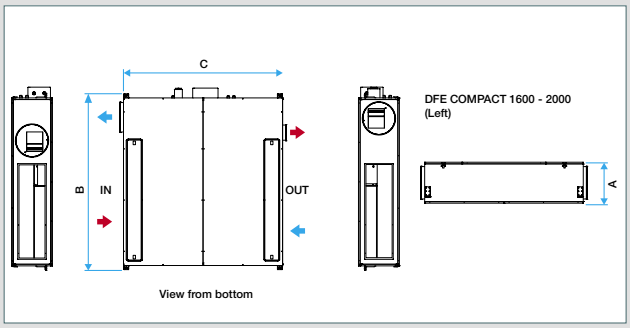

DFE Compact 1600-2000 micro-watt version gauche

Model	A (mm)	B (mm)	C (mm)	Ø Fresh air inlet or air exhaust (mm)	Ø Discharge or supply (mm)	Weight (kg)
DFE Compact 450	360	710	1180	Ø 200	Ø 200	87
DFE Compact 600	320	1000	1570	Ø 250	Ø 250	119
DFE Compact 1000	400	1150	1630	Ø 250	Ø 250	165
DFE Compact 1300	400	1790	1630	Ø 315	Ø 315	222
DFE Compact 1600	400	1790	1630	Ø 315****	Ø 315****	222
DFE Compact 2000	400	2090	1780	Ø 315****	Ø 315****	261

*** Dimensions and weights are given as a guide only. Make your selection in DFE Selector Suite to obtain the actual characteristics of your unit.
****Requires a rectangular/circular adapter.

SELECTION SOFTWARE

- Use SELECTOR DFE to define the full performance levels of DFE fan units.

Air handling units

False ceiling units

DFE compact micro-watt

Make your selection in Selector DFE for the detailed data.

AERAULIC CHARACTERISTICS AND POWER CONSUMPTION

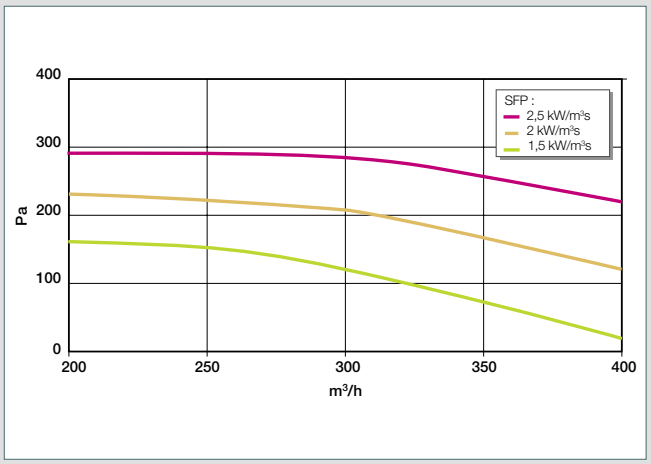

DFE Compact 450 micro-watt

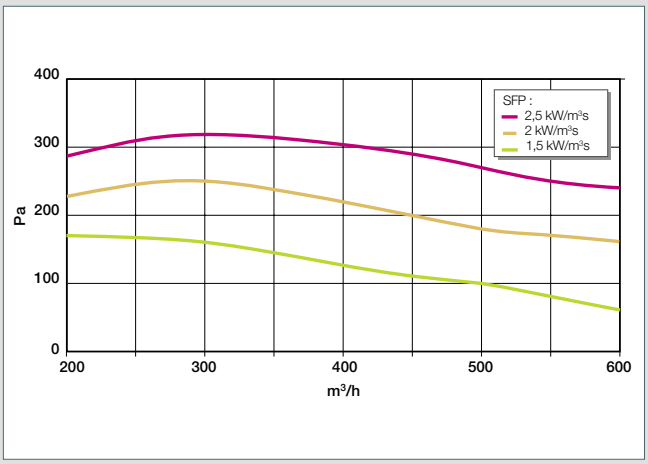

DFE Compact 600 micro-watt

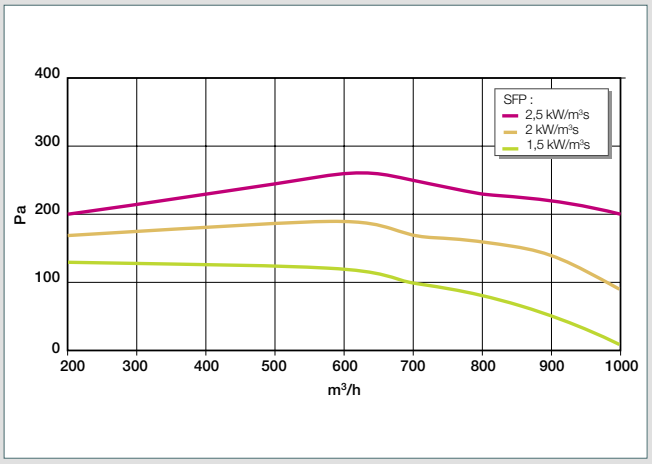

DFE Compact 1000 micro-watt

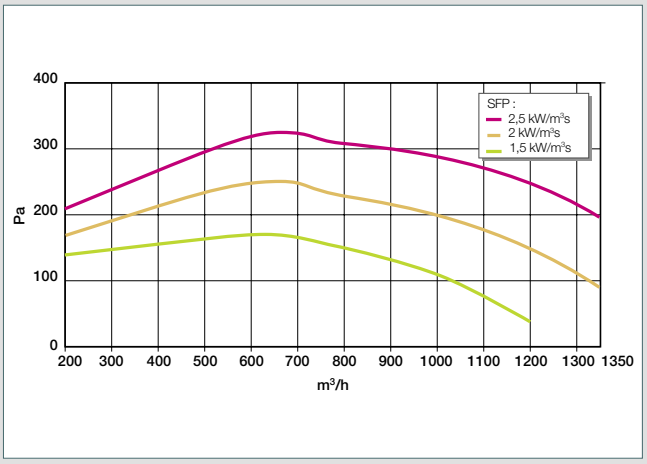

DFE Compact 1300 micro-watt

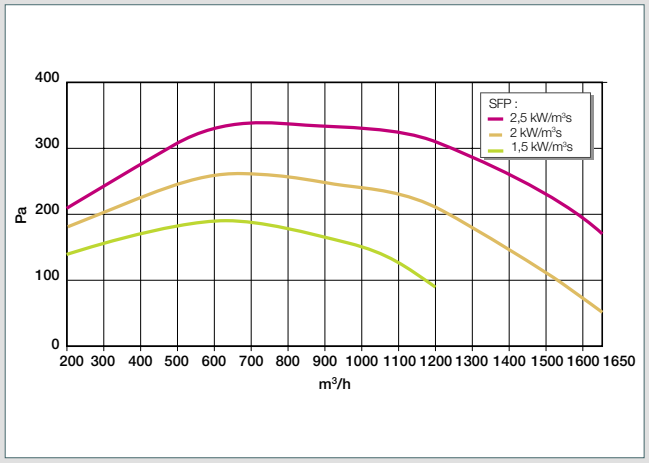

DFE Compact 1600 micro-watt

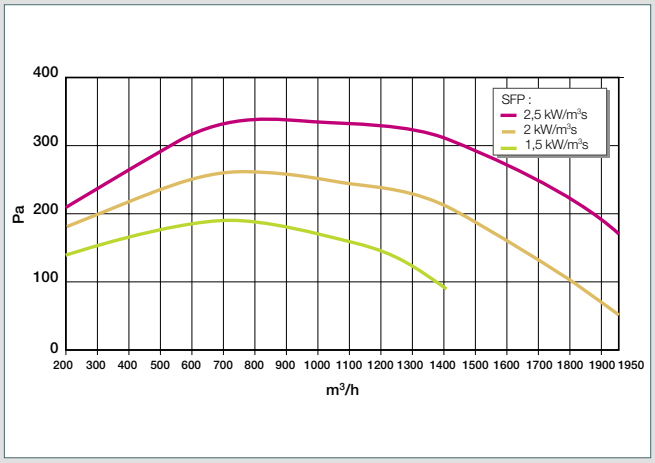

DFE Compact 2000 micro-watt

- Aeraulic curves established as per standard NF EN ISO 5801.
- : Lp (dB (A)) = sound pressure level measured at 4 m from the box fan, free discharge.
- P (Pa) = static pressure.
- P (W) = Power consumption.

Air handling units

False ceiling units

DFE compact micro-watt

CONFIGURATION

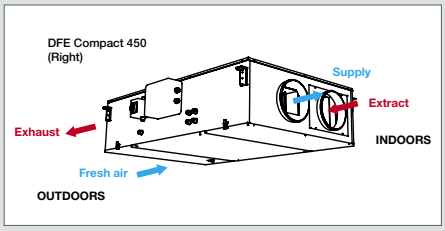

DFE Compact 450 (right access panel)

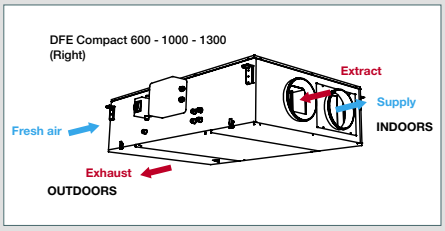

DFE Compact 600 - 1000 - 1300 (right access panel)

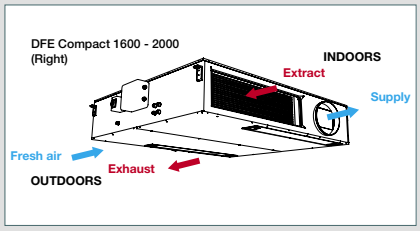

DFE Compact 1600-2000 (right access panel)

ELECTRICAL CHARACTERISTICS

- EC motor IP44 Class B.
- Single-phase 230 V - 50 Hz power supply.

Model	Max. airflow (m³/h)	Impeller	Pmax fan (kW)	Pmax consumption at max. airflow (kW)	I max (A)	Protection current (A)
DFE Compact 450	472	Forward curve	2 x 0.25	2 x 0.25	3.1	6.5
DFE Compact 600	630	Forward curve	2 x 0.25	2 x 0.25	3	8.7
DFE Compact 1000	1050	Forward curve	2 x 0.6	2 x 0.49	6.2	13
DFE Compact 1300	1360	Forward curve	2x 0.81	2 x 0.56	9.2	11.9
DFE Compact 1600	1600	Forward curve	2 x 0.81	2 x 0.81	9.2	8.8
DFE Compact 2000	2100	Forward curve	2 x 0.96	2 x 0.96	11.2	8.3

ACCESSORIES

Designation	Reference	Discount family
Spare filter kits		
G4 (Coarse 65%) FILTER KIT DFE COMPACT 450 TAC 3/4/5	11100234	*07*
G4 (Coarse 65%) FILTER KIT DFE COMPACT 600 TAC 3/4/5	11100235	*07*
G4 (Coarse 65%) FILTER KIT DFE COMPACT 1000 TAC 4/5	11100236	*07*
G4 (Coarse 65%) FILTER KIT DFE COMPACT 1600 TAC 4/5	11100237	*07*
G4 (Coarse 65%) FILTER KIT DFE COMPACT 2000 TAC 4/5	11100238	*07*
F7 (ePM1 60%) FILTER KIT DFE COMPACT 450 TAC 3/4/5	11100239	*07*
F7 (ePM1 60%) FILTER KIT DFE COMPACT 600 TAC 3/4/5	11100240	*07*
F7 (ePM1 60%) FILTER KIT DFE COMPACT 1000 TAC 4/5	11100241	*07*
F7 (ePM1 60%) FILTER KIT DFE COMPACT 1600 TAC 4/5	11100242	*07*
F7 (ePM1 60%) FILTER KIT DFE COMPACT 2000 TAC 4/5	11100243	*07*
G4 (Coarse 65%) FILTER KIT DFE COMPACT 1000 TAC3	11058197	*07*
F7 (ePM1 60%) FILTER KIT DFE COMPACT 1000 TAC3	11058198	*07*
G4 (Coarse 65%) FILTER KIT DFE COMPACT 2000 TAC3	11058199	*07*
F7 (ePM1 60%) FILTER KIT DFE COMPACT 2000 TAC3	11058200	*07*
Flexible air intake sleeve		
MS Pro V2 Ø 200 mm	11094296	*22*
MS Pro V2 Ø 250 mm	11094297	*22*
MS Pro V2 Ø 315 mm	11094298	*22*
Flexible connectors		
RS 200	11096934	*22*
RS 250	11096935	*22*
RS 315	11096936	*22*
Adapters		
DFE COMPACT 1600 Ø 315 CONNECTOR	11058422	*07*
DFE COMPACT 2000 Ø 315 CONNECTOR	11058423	*07*
CONTROL		
DFE pressure sensor kit	11058050	*07*
External coil SAT kit	11058443	*07*
SAT Modbus relay	11058442	*07*
SAT 3 relay	11058149	*07*
TACTouch remote touch-screen control	11069101	*07*
CO2 sensor	11017090	*12*
SAT WIFI DFE TAC 4/5	11060846	*07*
SAT Ethernet DFE TAC 4/5	11060847	*07*

Air handling units

False ceiling units

VEX300C

PRODUCT ADVANTAGES

- *Acoustic comfort.*
- *Energy savings.*
- *Easy installation and servicing.*

COMPLIANCE

- *Eurovent Certification (AHU)(2).*
- *CE compliance.*
- *Construction as per German health standard VDI6022.*
- *German RLT certification.*
- *ErP (1).*

RANGE

Designation	Reference
VEX320C-1	11058413
VEX320C-2	11058414
VEX330C-1	11058418
VEX330C-2	11058419

DESCRIPTION

- 4 VEX300C models up to 1,400 m³/h.
- Monobloc units.
- AHU-certified no. 10.12.505.
- Self-supporting construction with double-skin panels.
- Exterior and interior finish in Aluzinc AZ185: corrosion class C4.
- Mineral wool insulation, 50 mm thick (Class A1 as per DIN4012), density 65 kg/m³.
- EN1886 values: D1/T2/TB3/L1/L1/F9.
- EC motor with high-efficiency backward curve impeller.
- Easy access and servicing: sliding or hinged doors.
- Choice of control position.
- High-efficiency counterflow plate heat exchanger (up to 95%) Eurovent AAHE-certified.
- Adjustable by-pass.
- Choice of filter to guarantee air quality: Filter M5 (ePM10 65%) or F7 (ePM1 55%) (contact us for other types of filter and pre-filter).
- Built-in switch.
- EXact2 control:
  - Constant speed,
  - Multi-speed,
  - Constant pressure,
  - 0-10 V.
- Configuration and monitoring via:
  - Wired remote control,
  - Optional: Web server and BMS communication via Modbus RTU/RS485, BACnet MSTP/BACnet IP protocols,
  - Optional: Web server and BMS communication via a gateway supplied to Modus TCPIP or LON protocols.

FIELD OF APPLICATION

- Heat recovery ventilation for energy-efficient commercial buildings of all types: offices, schools, shops, etc.
- Filtration, pre-heating and cooling of supply air.

INSTALLATION

- Indoor installation in suspended ceiling.
- In-line duct connection.
- Connection by circular branch connectors.
- Choice of left or right side for ancillaries.

RANGE

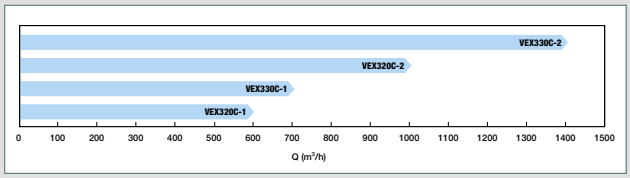

The capacities for each model are indications as per EcoDesign ErP 2018. Consult the EXselectPRO software for the details of each unit.

DIMENSIONS (mm) - WEIGHT (kg)

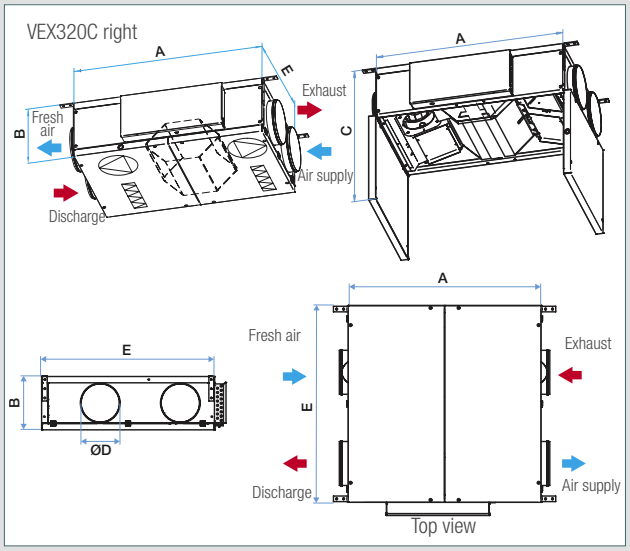

Models 320C and 330C

Dimensions and weights are given as a guide only. Make your selection in the EXSelect PRO software program to obtain the actual characteristics of your unit.

Model	A (mm)	B (mm)	E (mm)	F (mm)	C (mm)	D (Ø mm)	Weight (kg)
VEX320-C1	1385	440*	900	540	1085	315	128
VEX320-C2	1385	440*	900	540	1085	315	131
VEX330-C1	1385	440*	1410	540	1085	315	178
VEX330-C2	1385	440*	1410	540	1085	315	181

And 540 in sliding version.

* <440 mm and 540 in sliding version upon request.

SELECTION SOFTWARE

EXselectPRO offers simple, user-friendly selection of the VEX300C that matches your needs and the building configuration: Online access from our website.

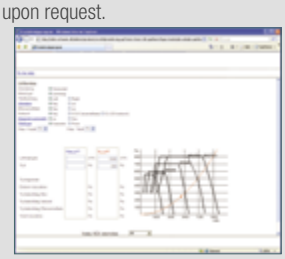

(1) Compliant with Eco-design Regulation 1253/2014

(2) Involvement in the Eurovent Certita Certification programme for air handling units (AHU); certified data for certified models are list in the Eurovent Directory

VEX300C

ACCESSORIES

- Closing damper with or without return spring.
- Panel filters F7 (ePM1 55%).
- Panel filters M5 (ePM10 65%).
- Please contact us for other types of G4 filters and pre-filters.

To ensure good indoor air quality and energy efficiency of your unit, we advise changing your G4/M5 filter every three months and your F7/F9 filter every six months, or when the filter monitoring alarm is triggered. These intervals can vary according to the pollution level. For further information, please contact us.

AVAILABLE OPTIONS

- Version with or without Exact2 control.
- Right or left control position.
- External hot water coil.
- External cold water coil
- External electrical heater.
- External DX direct expansion coil (condensation/evaporation).
- Web server with BMS communication protocols: Modbus RTU/RS485, BACnet MSTP or BACnetIP (LON and Modbus TCPIP possible via an additional gateway).

AERAULIC CHARACTERISTICS

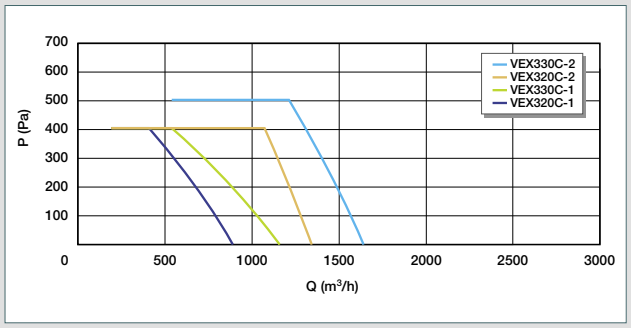

ELECTRICAL CHARACTERISTICS

All VEX300C units are:
1 x 230 V + N + PE ~ 50 Hz

Air handling units

Decentralised units

VEX308

PRODUCT ADVANTAGES

- *Easy to fit, without ducts.*
- *Filtration of 90% of fine particles.*
- *Reduces CO_2 level in indoor air.*
- *Acoustic performance.*

COMPLIANCE

- *CE compliance.*
- *Eurovent certified air-air counterflow heat exchanger as per air-air heat exchanger programme (AAHE).*
- *ErP [1].*

RANGE

Designation	Reference
Std. VEX308 (visible unit)*	11058137
Int. VEX308 (unit semi-flush mounted in suspended ceiling)	11058138

DESCRIPTION

- 1 decentralised model up to 850 m³/h in two versions:
  - Visible version (STD),
  - Semi-flush mounted (INT) for suspended ceiling mounting.
- Monobloc construction.
- 20 mm polyurethane insulation to ensure sound attenuation.
- Exterior finish in Aluzinc AZ185: corrosion class C4. Can be customised by painting white (standard) or anthracite grey, as required.
- Vertical branch connectors for connection via the ceiling or rear horizontal branch connectors for wall connection.
- EC motor and forward curve impeller.
- High-efficiency counterflow heat exchangers (Eurovent AAHE) up to 95%.
- Adjustable by-pass.
- Filters: ePM10 60% (M5) or ePM1 55% (F7).
- Pre-filter Coarse 60% (G4) in accessories.
- Accessories:
  - Built-in movement sensor including LED status indicator - PIR,
  - Built-in CO_2 sensor,
  - Built-in humidity sensor - HR,
  - Web server communication - WEBE,
  - Wired remote control.

  Note: if the CO_2 or movement sensors are selected, the VEX308 will be totally ready for use.
- EXact2 control with possibility of centralised monitoring of several units:
  - Constant speed,
  - Multi-speed,
  - Constant pressure,
  - 0-10 V.
- Configuration and monitoring via:
  - Wired remote control,
  - Optional: Web server and BMS communication via Modbus RTU/RS485, BACnet MSTP/BACnet IP protocols,
  - Optional: Web server and BMS communication via a gateway supplied to Modus TCPIP or LON protocols.

FIELD OF APPLICATION

- Decentralised heat recovery ventilation intended for classroom and office space renovation projects.

RANGE

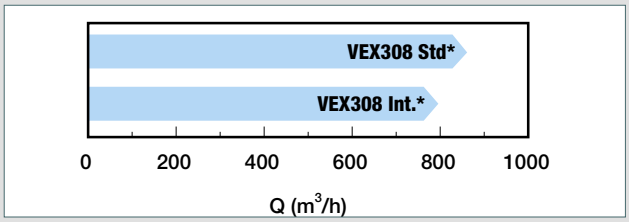

* Standard (Std): the unit is visible
Built-in (Int): the unit is semi-flush mounted in the suspended ceiling

The capacities for each model are indications as per EcoDesign ErP 2018. Consult the EXSelect VEX308 software for the details of each unit.

DIMENSIONS (mm) - WEIGHT (kg)

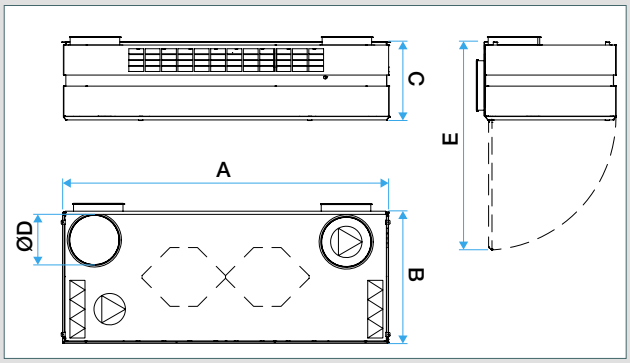

Model	A (mm)	B (mm)	C (mm)	D (Ø mm)	E (mm)	Weight (kg)
VEX308 Std	2072	840	500	315	1320	185
VEX308 Int	2075	840	500	315	1320	203

Dimensions and weights are given as a guide only. Make your selection in the EXSelect software program to obtain the actual characteristics of your unit.

SELECTION SOFTWARE

The EXselect VEX308 selection software can be used to design your unit according to your needs. Online access from our website.

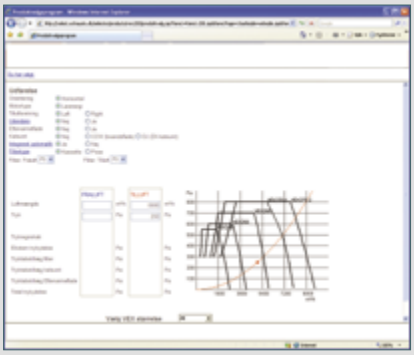

VEX308

ACCESSORIES

- Closing damper with return spring (for hot water coil).
- Closing damper Ø 315 mm.
- Aluminium grilles AR637 Ø 315 mm.
- ePM10 60% (M5).
- ePM1 55% (F7).
- Pre-filter Coarse 60% (G4) in accessories.

To ensure good indoor air quality and energy efficiency of your unit, we advise changing your G4/M5 filter every three months and your F7/F9 filter every six months, or when the filter monitoring alarm is triggered. These intervals can vary according to the pollution level. For further information, please contact us.

AVAILABLE OPTIONS

- Version with or without Exact2 control.
- Vertical branch connector version (ceiling mounting).
- Horizontal branch connector version (façade mounting).
- Visible mounting version (std) or semi-flush mounted (int).
- Customised exterior finish in Aluzinc, pre-painted in white (standard) or anthracite grey. Customisable colour strip (choice of eight colours).
- Built-in hot water coil (two sizes, with valves and closing dampers).
- Built-in electrical heater.
- Web server with BMS communication protocols Modbus RTU/RS485, BACnet MSTP or BACnetIP (LON and Modbus TCPIP possible via an additional gateway).

INSTALLATION

- Indoors in a classroom, office space, etc.
- Ceiling installation (visible or partially built-in) or against a façade.
- No ventilation duct.

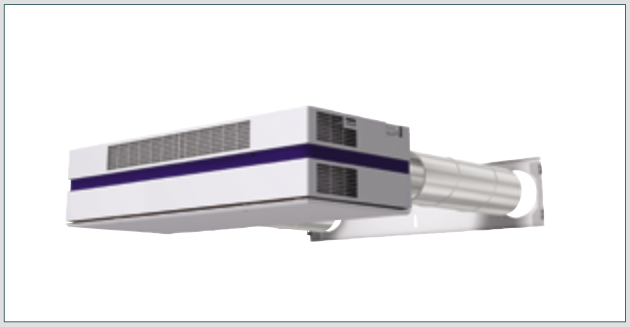

Façade mounting (horizontal branch connectors)

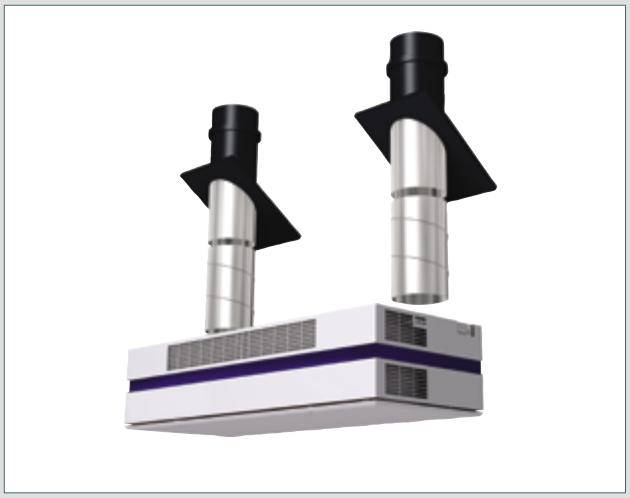

Mounting with vertical branch connectors

ELECTRICAL CHARACTERISTICS

All VEX308 units are:
1 x 230 V + N + PE ~ 50 Hz.

(1) Compliant with Eco-design Regulation 1253/2014

Air handling units

Rotary heat exchangers

VEX200

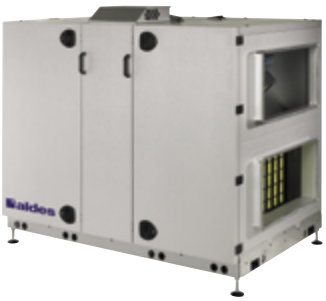

PRODUCT ADVANTAGES

- *Flexibility.*
- *Comfort.*
- *Energy savings.*
- *Easy installation and servicing.*

COMPLIANCE

- *Eurovent Certification (AHU)(2).*
- *CE compliance.*
- *Construction as per German health standard VDI6022.*
- *German RLT certification.*
- *ErP (1).*

RANGE

Designation	Reference
VEX240	11058005
VEX250	11058006
VEX260	11058007
VEX270	11058008
VEX280	11058009

DESCRIPTION

- 5 VEX200 models up to 14,000 m³/h.
- Total certified AHU and heat exchanger certified AAHE.
- AHU-certified no. 10.12.505.
- Monobloc or multi-bloc units depending on model.
- Self-supporting construction with double-skin panels.
- Exterior and interior finish in Aluzinc AZ185: corrosion class C4.
- Mineral wool insulation, 50 mm thick (Class A1 as per DIN4012), density 65 kg/m³.
- EN1886 values: D1/T2/TB3/L1/L1/F9.
- Configurable branch connectors.
- EXstream EC motor with high-efficiency backward curve impeller.
- Easy access and servicing: components mounted on sliders, control system accessible via a specific central hatch.
- Choice of two efficiency levels on rotary heat exchanger (Eurovent AARE) with optional purge section to maintain the indoor air quality.
- Choice of four types of heat exchanger on request:
  - Standard aluminium condensation model,
  - Hygroscopic,
  - Sorption: ideal for hot, humid climates,
  - Epoxy: ideal for corrosive atmospheres (i.e. marine).
- Choice of filters to ensure air quality: panel or bag filters M5 (Coarse 85%) and F7 (ePM1 55%) (contact us for other types of filter and pre-filter).
- Built-in switch.
- EXact2 control:
  - Constant speed,
  - Multi-speed,
  - Constant pressure,
  - 0-10 V.
- Configuration and monitoring via:
  - Wired remote control,
  - Optional: Web server and BMS communication via Modbus RTU/RS485, BACnet MSTP/BACnet IP protocols,
  - Optional: Web server and BMS communication via a gateway supplied to Modus TCPIP or LON protocols.

FIELD OF APPLICATION

- Heat recovery ventilation for energy-efficient commercial buildings of all types: offices, schools, shops, etc.
- Filtration, pre-heating and cooling of supply air.

INSTALLATION

- Equipment rooms/flat roofs.
- Indoors/outdoors.
- In-line duct connection or choice of having two vertical branch connectors.
- Connection by circular or rectangular branch connectors depending on model.
- Choice of left or right side for ancillaries.

RANGE

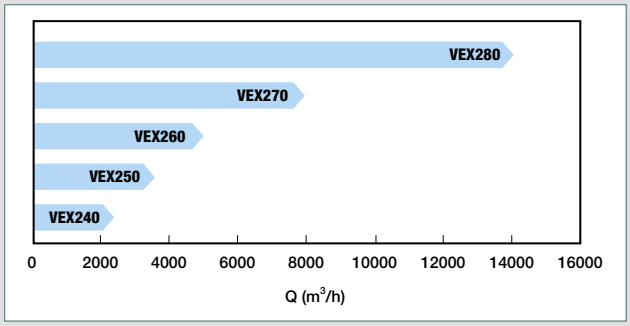

The capacities for each model are indications. Consult the EXselectPRO software for the details of each unit.

DIMENSIONS (mm) - WEIGHT (kg)

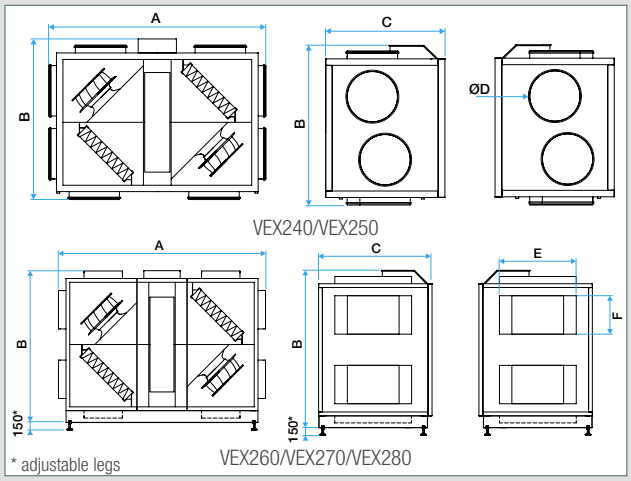

Dimensions and weights are given as a guide only. Make your selection in the EXSelect PRO software program to obtain the actual characteristics of your unit.

Model	A (mm)	B (mm)	C (mm)	Branch connector size (E x F mm or Ø)	Weight (kg)
VEX 240	1490	1155	860	Ø 315	260
VEX 250	1600	1205	945	Ø 400	273
VEX 260	1820	1475	1265	800 x 400	525
VEX 270	2050	1705	1525	1000 x 500	750
VEX 280	2160	2005	1900	1400 x 600	1102

SELECTION SOFTWARE

EXselectPRO offers simple, user-friendly selection of the VEX200 that matches your needs and the building configuration: Online access from our website.

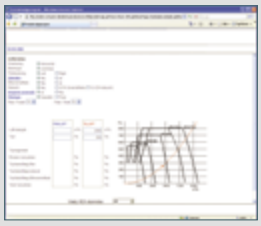

* Price based on indoor model, Exact2 automatic controls, standard impeller 1.6 mm, without coils or filters
(1) Compliant with Eco-design Regulation 1253/2014
(2) Involvement in the Eurovent Certita Certification programme for air handling units (AHU); certified data for certified models are list in the Eurovent Directory

VEX200

ACCESSORIES

- Motorised damper.
- Panel or bag filters F7 (ePM1 55%).
- Panel or bag filters M5 (Coarse 85%).
- Please contact us for other types of G4 filters and pre-filters.

To ensure good indoor air quality and energy efficiency of your unit, we advise changing your G4/M5 (Coarse 85%) filter every three months and your F7 (ePM1 55%) /F9 (ePM1 80%) filter every six months, or when the filter monitoring alarm is triggered. These intervals can vary according to the pollution level. For further information, please contact us.

AVAILABLE OPTIONS

- Outdoor version.
- Version with or without Exact2 control.
- "Split" removable version with Aldes support.
- External hot water coil.
- External cold water coil.
- External electrical heater.
- External DX direct expansion coil (condensation/evaporation).
- Web server with BMS communication protocols: Modbus RTU/RS485, BACnet MSTP or BACnetIP (LON and Modbus TCPIP possible via an additional gateway).
- High-efficiency rotary heat exchanger.
- Epoxy, sorption or hygroscopic heat exchanger.

ACCESSORIES TO COMPLY WITH CH 38

Designation	Reference
Motor SFA-S2 TOR with return spring	11055045
Autonomous Triggering Device Detector (DAD)	11906103
Fume sensor	11058417

Mandatory for the units:
- with an airflow faster than 10,000 m³/h,
- and/or a set of units handling more than 10,000 m³/h in total for a same room,
- and/or serving sleeping accommodation.

An autonomous fume triggering device must stop the fan and isolate it from the air supply by closing a damper and cutting off the power to any coils fitted.

AERAULIC CHARACTERISTICS

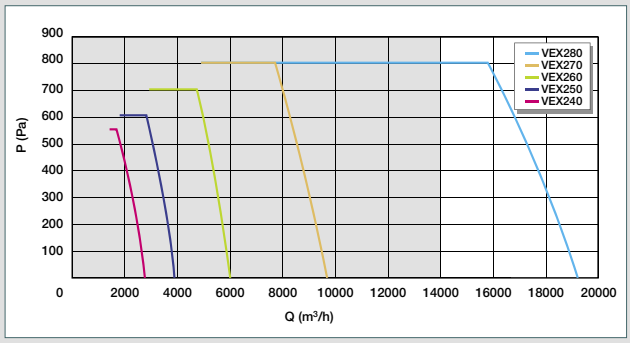

The greyed area corresponds to ErP 2018 compliance.

ELECTRICAL CHARACTERISTICS

Model	Voltage (V)
VEX240	1 x 230 V + N + PE ~ 50 Hz
VEX250	3 x 400 V + N + PE ~ 50 Hz
VEX260	3 x 400 V + N + PE ~ 50 Hz
VEX270	3 x 400 V + N + PE ~ 50 Hz
VEX280	3 x 400 V + N + PE ~ 50 Hz

Air handling units

Rotary heat exchangers

VEX700T

RANGE

Designation	Reference	Discount family
VEX720T	11069105	*07*
VEX725T	11069106	*07*
VEX740T	11069107	*07*
VEX750T	11069108	*07*
VEX760T	11069109	*07*
VEX770T	11069110	*07*
VEX780T	11069111	*07*
VEX790T	11069112	*07*

DESCRIPTION

- Eight VEX700T models up to 10,000 m³/h.
- Mono and bi-bloc units.
- Self-supporting construction made up of galvanised steel panels. Exterior paint RAL7042.
- Mineral wool insulation, 50 mm thick, density 70 kg/m³.
- Access to all components via hinged doors on the front and to the control system via a specific central hatch.
- High-efficiency rotary heat exchanger up to 86% (AARE-certified) and sorption version as option.
- EC motor with high-efficiency backward curve impeller.
- Panel filters M5 (ePM10 50%) at exhaust and F7 (ePM1 65%) at fresh air (standard).
- Filters M5 (ePM10 50%), F7 (ePM1 65%) and F9 (ePM1 80%) available.
- Pre-filters M5 (ePM10 50%) and F7 (ePM1 65%) as option.
- External electrical heaters, hot water, cold water, changeover and Dx+/-.
- Proximity switch available as accessory.
- Siemens Climatix controls:
  - Constant speed,
  - Constant airflow,
  - Constant pressure,
  - Airflow varied by CO_2/VOC sensor (signal 0-10 V),
  - Built-in clock: operating hours can be controlled with timer.
- Configuration and monitoring via:
  - Remote control,
  - Web interface,
  - BMS via ModbusTRU, Bacnet TCP/IP or MS/TP protocols.
- De-icing by reducing impeller speed.
- Free cooling as standard and Night cooling as option (with an ambient T° sensor).

FIELD OF APPLICATION

- Heat recovery ventilation for energy-saving commercial buildings, both new and being refurbished: offices, shops, hotels, etc.
- Filtration, pre-heating and cooling of supply air.

INSTALLATION

- Equipment rooms.
- Indoors.
- Vertical duct connection.
- Connection by rectangular branch connectors (circular connection using adapters).
- Choice of left or right side for ancillaries.

PRODUCT ADVANTAGES

- *Small air handling units (vertical branch connectors and bi-blocs).*
- *Aldes customised Siemens Climatix controls.*
- *Optimum air quality and thermal comfort provided by a wide choice of filtration and coils.*
- *Easy to install and activate.*

COMPLIANCE

- *Eurovent-certified enthalpy rotary heat exchanger as per rotary heat exchanger programme (AARE).*
- *CE compliance.*
- *ErP 2018-compliant*.*

RANGE

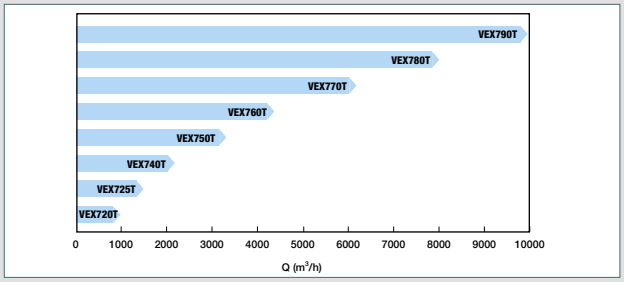

DIMENSIONS (mm) - WEIGHT (kg)**

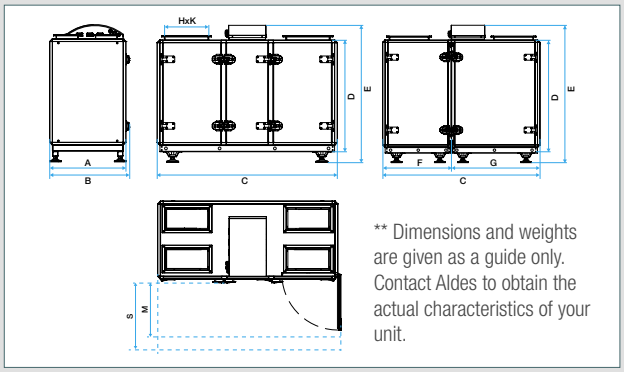

** Dimensions and weights are given as a guide only. Contact Aldes to obtain the actual characteristics of your unit.

Model	A (mm)	B (mm)	C (mm)	D (mm)	E (mm)	F (mm)	G (mm)	Branch connector size (H x K mm)	Ø std circ. branch connector (mm)	S (mm)	M (mm)	Weight (kg)
VEX720T	705	740	1630	1010	1245	-	-	400x200	250	700	600	250
VEX725T	705	740	1630	1010	1245	-	-	400x200	250	700	600	250
VEX740T	805	840	1630	1110	1345	-	-	400x250	315	800	600	280
VEX750T	955	1010	1580	1145	1380	690	890	400x350	355	950	870	340
VEX760T	1055	1110	1580	1245	1480	690	890	400x400	400	1050	870	370
VEX770T	1185	1240	1580	1245	1480	690	890	400x450	450	1200	870	410
VEX780T	1405	1460	1930	1405	1680	860	1070	550x500	560	1300	1050	485
VEX790T	1405	1460	1930	1405	1680	860	1070	550x500	560	1300	1050	500

ELECTRICAL CHARACTERISTICS

Choice of electrical cables to power the heat recovery unit - 400 V 3-phase + neutral + earth.

Model	Power (kW)	Current (A)	Fuse (A)
VEX720T	1	2	3x3
VEX725T	1	2	3x3
VEX740T	1.5	3	3x4
VEX750T	2.4	4.7	3x6
VEX760T	3.5	7	3x10
VEX770T	5.8	11.5	3x16
VEX780T	7	13.9	3x16
VEX790T	11	21.4	3x25

* Compliant with Eco-design Regulation 1253/2014

VEX700T

Contact Aldes for the detailed data.

AERAULIC CHARACTERISTICS

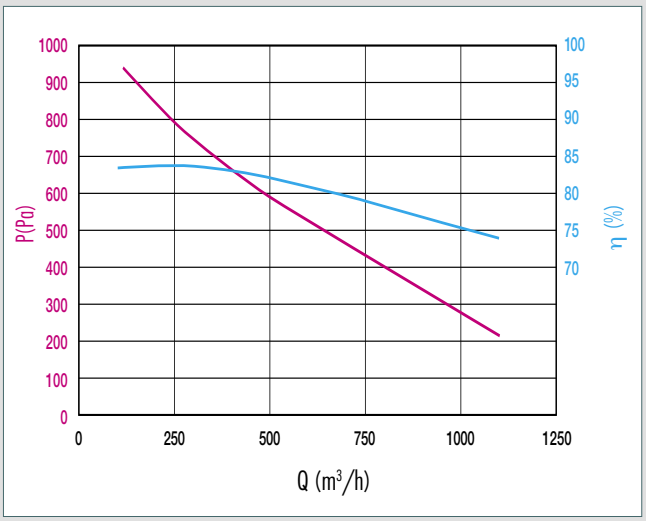

VEX720T

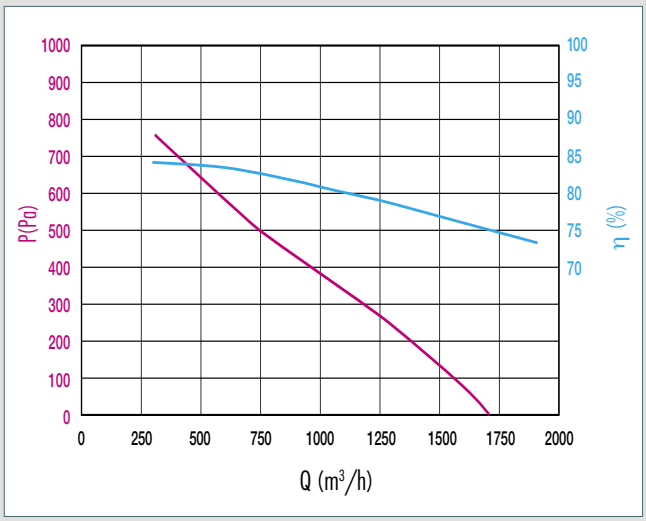

VEX725T

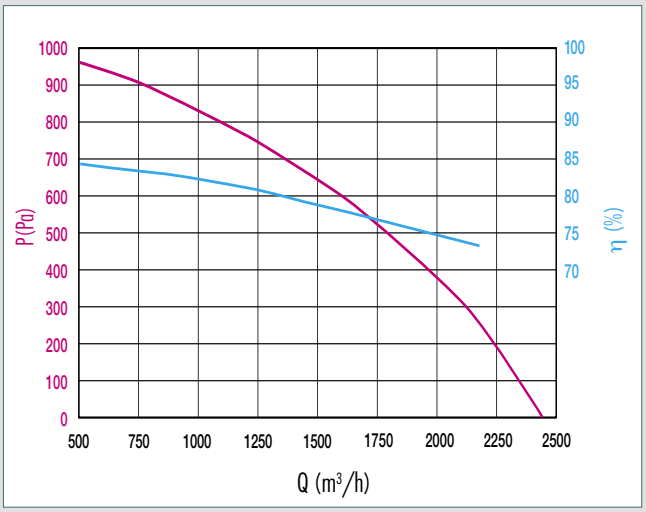

VEX740T

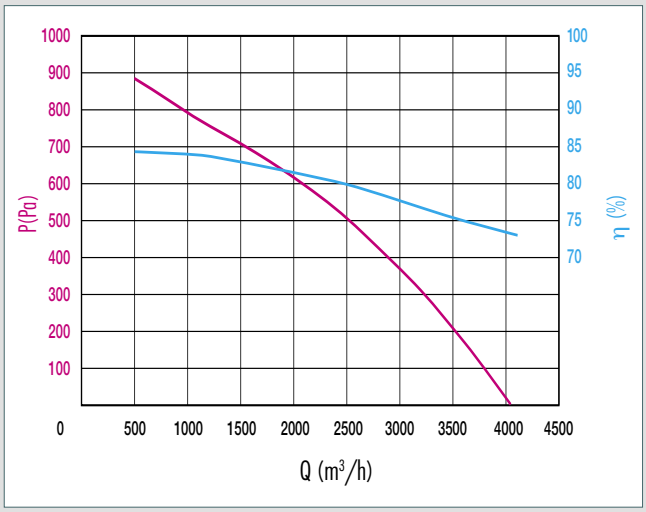

VEX750T

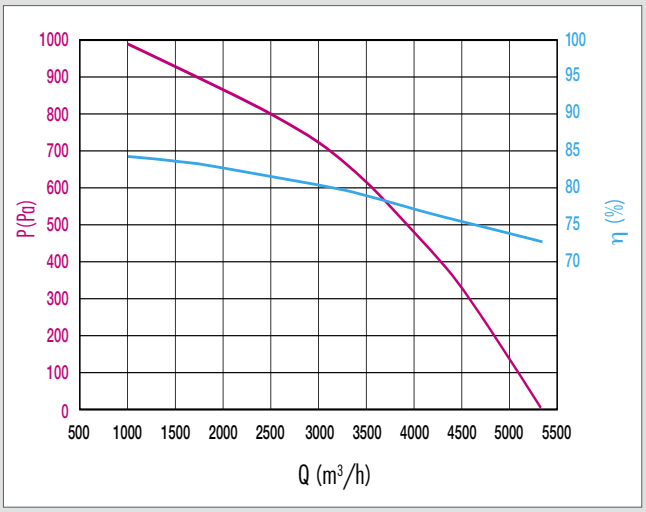

VEX760T

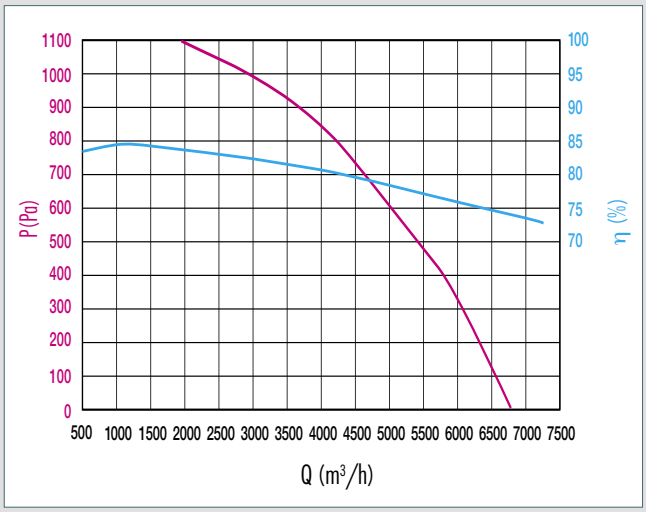

VEX770T

Air handling units

Rotary heat exchangers

VEX700T

Contact Aldes for the detailed data.

AERAULIC CHARACTERISTICS

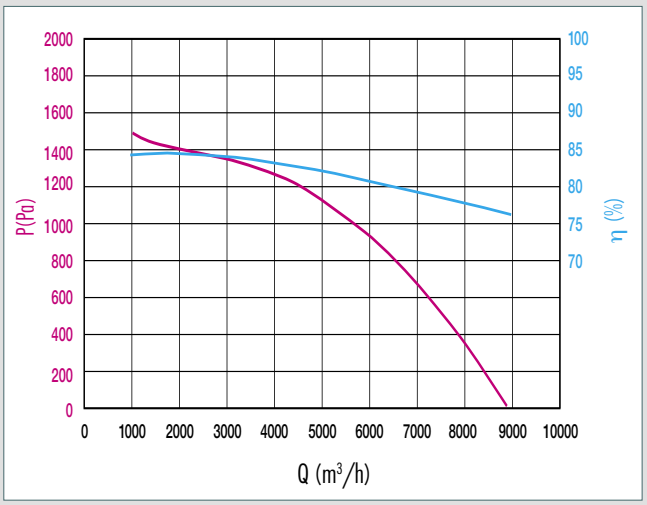

VEX780T

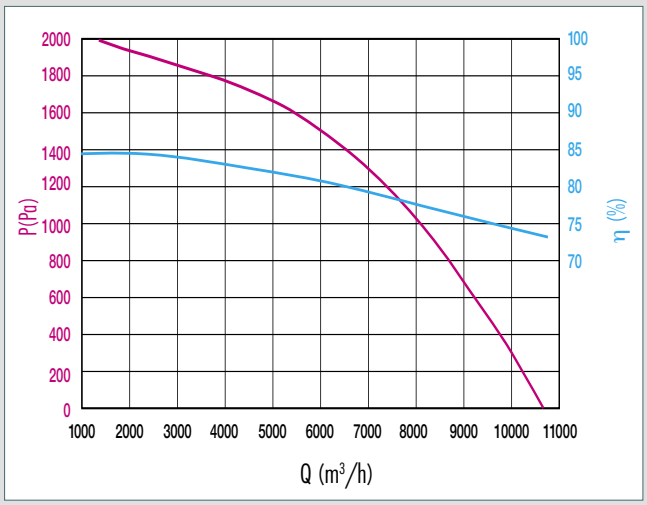

VEX790T

- Aeraulic curves drawn up as per standard NF EN ISO 5801.
- P (Pa) = static pressure.
- P (W) = power consumption.

VEX700T

ACCESSORIES

		VEX720T	VEX725T	VEX740T	VEX750T	VEX760T	VEX770T	VEX780T	VEX790T
Control									
Pressure sensor	Reference	11069103							
Sens CO2 sensor (atmosphere)	Reference	11017090							
Duct CO2 sensor	Reference	11100142							
Duct humidity sensor	Reference	11069113							
VOC sensor (atmosphere)	Reference	11069115							
Impeller speed controller	Reference	11069102							
Silencer									
L600	Reference	11069124		11069128	11069132	11069136	11069140	11069144	
L1000	Reference	11069125		11069129	11069133	11069137	11069141	11069145	
L1500	Reference	11069126		11069130	11069134	11069138	11069142	11069146	
L2000	Reference	11069127		11069131	11069135	11069139	11069143	11069147	
Filtration									
Filter M5 (ePM10 50%) Kit	Reference	11100994		11100995	11100996	11100997	11100998	11100999	
Filter F7 (ePM1 65%) Kit	Reference	11101000		11101001	11101002	11101003	11101004	11101005	
Filter F9 (ePM1 80%) Kit	Reference	11101006		11101007	11101008	11101009	11101010	11101011	
Other									
Proximity cut-off switch	Reference	11057606							11057610
Motorised fresh air + exhaust air damper (inseparable)	Reference	11069116	11069117	11069118	11069119	11069120	11069121	11069122	11069123
2nd filter pressure switch	Reference	11069114							

To ensure good indoor air quality and energy efficiency of your unit, we advise changing your G4/M5 (ePM10 50%) filter every three months and your F7 (ePM1 65%)/F9 (ePM1 80%) filter every six months, or when the filter monitoring alarm is triggered. These intervals can vary according to the pollution level. For further information, please contact us.

Air handling units

Modular units

VEX4000

RANGE

Designation	References
VEX4010	11058017
VEX4020	11058018
VEX4030	11058019
VEX4040	11058020
VEX4050	11058025
VEX4060	11058026
VEX4070	11058027
VEX4080	11058028
VEX4090	11058029
VEX4100	11058030

DESCRIPTION

- Ten models up to 30,000 m³/h.
- Modular air handling units.
- AHU certified 16.01.020.
- Construction in aluminium profiles, double-skin panels.
- Exterior finish in Aluzinc AZ185: corrosion class C4. Please consult us for other finishes.
- Mineral wool insulation, 50 mm thick (Class A1 as per DIN4012) 65 kg/m³.
- EN1886 values: D2, L1/L1, T2, TB3 (TB2 available shortly) F9.
- Very low consumption EC motor with backward curve impeller with optimised SFP thanks to centrifuge fans with direct-drive backward curve impeller.
- Easy access and servicing: components mounted on sliders, lit inspection ports (optional), doors on adjustable, lift-off hinges with lockable handles.
- High-efficiency rotary heat exchanger (Eurovent AARE) with choice of four types of efficiency. Optional purge section to maintain the indoor air quality.
- Four types of heat exchanger:
  - Standard aluminium condensation model,
  - Hygroscopic,
  - Sorption: ideal for hot, humid climates,
  - Epoxy: ideal for corrosive atmospheres (i.e. marine).
- Cross-current heat exchanger (ErP 2018 compliant) in standard aluminium or epoxy. Corrosion-resistant stainless steel condensate collection tray and built-in adjustable by-pass.
- Choice of filters to ensure air quality: bag filters M5 (ePM10 65%), F7 (ePM1 65%), F9 (ePM1 65%) or active carbon F7C (contact us for other types of filter and pre-filter).
- Built-in switch.
- EXcon 100% Plug & Play controls:
  - Constant airflow,
  - Constant pressure,
  - Airflow varied using CO_2/VOC sensor (0-10V signal),
  - Regulated pressure: optimum pressure control used to adapt pressure setpoint according to airflow measured, ensuring energy efficiency,
  - Temperature control,
  - Built-in clock: operating hours can be controlled with timer.
- Configuration and monitoring via remote touch-screen control.
- BMS communication protocols:
  - Built-in web server TCP/IP RJ45,
  - ModbusRTU RS485,
  - BACnet TCP/IP,
  - LON (option).
- Version without controls also available.

FIELD OF APPLICATION

- Heat recovery ventilation for energy-efficient commercial buildings of all types: offices, schools, shops, etc.
- Filtration, pre-heating and cooling of supply air.

PRODUCT ADVANTAGES

- *Energy performance.*
- *Low noise level.*
- *Quality and reliability.*
- *Easy servicing and installation.*

COMPLIANCE

- *Eurovent Certification (AHU)(2).*
- *CE compliance.*
- *Construction as per German health standard VDI6022.*
- *German RLT certification.*
- *ErP (1).*

RANGE

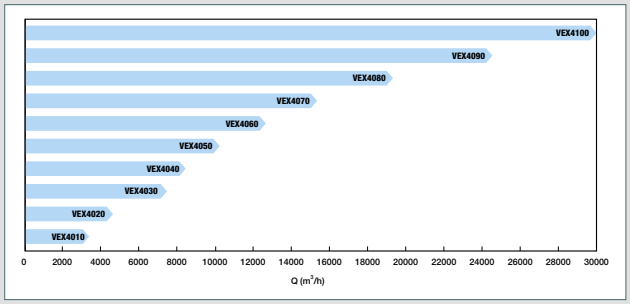

The capacities for each model are indications as per EcoDesign ErP 2018. Consult the EXselectPRO software for the details of each unit.

DIMENSIONS (mm) - WEIGHT (kg)

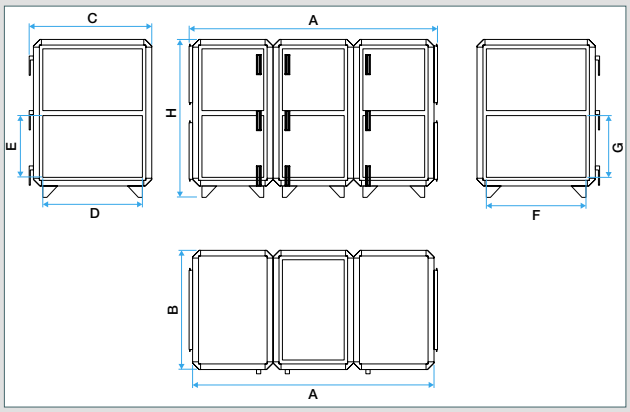

Example of a basic VEX4000 without coils, with standard rotary heat exchanger. Dimensions and weights are given as a guide only. Make your selection in the EXSelect PRO software program to obtain the actual characteristics of your unit.

Model	A (mm)	B (mm)	H (mm)	D x E (mm)	Weight (kg)
VEX4010	2144	1055	1409	700 x 500	604
VEX4020	2144	1275	1409	900 x 500	678
VEX4030	2254	1549	1599	1200 x 600	859
VEX4040	2254	1630	1699	1300 x 600	957
VEX4050	2254	1755	1844	1400 x 700	1030
VEX4060	2544	1930	2169	1600 x 800	1244
VEX4070	2724	2115	2169	1800 x 800	1399
VEX4080	2724	2325	2444	2000 x 900	1557
VEX4090	2724	2625	2694	2200 x 1000	1782
VEX4100	2724	2895	2974	2400 x 1200	2055

SELECTION SOFTWARE

EXselectPRO offers simple, user-friendly selection of the VEX4000 that matches your needs and the building configuration:
Free download on web.

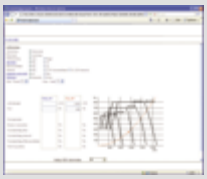

(1) Compliant with Eco-design Regulation 1253/2014
(2) Involvement in the Eurovent Certita Certification programme for air handling units (AHU); certified data for certified models are list in the Eurovent Directory

VEX4000

INSTALLATION

- Equipment rooms/flat roofs.
- Indoors/outdoors.
- In-line duct connection or choice of having two vertical branch connectors.
- Connection by vertical rectangular branch connectors.
- Choice of left or right side for ancillaries.

ELECTRICAL CHARACTERISTICS

All VEX4000 units are 3 x 400 V + N + PE ~ 50 Hz.

ACCESSORIES

- Bag filters M5 (ePM10 65%) (two bag lengths).
- Panel pre-filters M5 (ePM10 65%) and F7 (ePM1 65%).
- Bag filters (ePM1 65%) (two bag lengths).
- Bag filters F9 (ePM1 65%) (two bag lengths).
- Please contact us for active carbon filters F7C and other types of filter/pre-filter.

To ensure good indoor air quality and energy efficiency of your unit, we advise changing your G4/M5 (ePM10 65%) filter every three months and your F7 (ePM1 65%) /F9 (ePM1 65%) filter every six months, or when the filter monitoring alarm is triggered. These intervals can vary according to the pollution level. For further information, please contact us.

AVAILABLE OPTIONS

- Versions with or without EXcon controls.
- Delivery possible (depending on model) assembled on base frame or legs for easier installation or in separate modules for ease of site access.
- Outdoor version assembled and mounted on base frame. Aluzinc panels as required. Factory-mounted cowl, rain hood with bird protection screen.
- Inspection ports with lighting.
- Hot water coil.
- Cold water coil.
- Changeover coil (+/-).
- Electrical heater with TRIAC controls.
- Direct expansion cold coil (DX-).
- Built-in cooling thermodynamic unit.
- Recycling box fan.
- High-efficiency rotary heat exchanger.
- Epoxy, sorption or hygroscopic rotary heat exchanger.
- Motorised dampers.

ACCESSORIES TO COMPLY WITH CH 38

Designation	Reference
Motor SFA-S2 TOR with return spring	11055045
Autonomous Triggering Device Detector (DAD)	11906103
Fume sensor	11058417

Mandatory for the units:

- with an airflow faster than 10,000 m^3/h,
- and/or a set of units handling more than 10,000 m^3/h in total for a same room,
- and/or serving sleeping accommodation.

An autonomous fume triggering device must stop the fan and isolate it from the air supply by closing a damper and cutting off the power to any coils fitted.

Air handling units

Modular units

VEX5000

PRODUCT ADVANTAGES

- *Modular design: Exhaust/air supply or heat recovery ventilation.*
- *Broad airflow range.*
- *Withstands extreme temperatures.*

COMPLIANCE

- *Eurovent Certification (AHU)(2).*
- *CE compliance.*
- *ErP (1).*

DESCRIPTION

- Eight models up to 50,000 m³/h.
- Modular air handling units, Exhaust/air supply and heat recovery ventilation.
- AHU-certified 16.01.020.
- Construction in aluminium profiles, double-skin panels.
- Exterior finish in Aluzinc AZ185: corrosion class C4.
- Mineral wool insulation, 50 mm thick, density 70 kg/m³.
- EN1886 values: D2, L1/L2, T3, TB3, F9 (ePM1 80%).
- AC motors, fans with backward curve impeller or axial ZerAX.
- Easy access and servicing: components mounted on sliders, lit inspection ports (optional), doors on adjustable, lift-off hinges with lockable handles.
- High-efficiency rotary heat exchanger (Eurovent AARE) with choice of efficiency. Can be delivered in sections (depending on size).
- Built-in purge section to maintain the indoor air quality.
- Three types of rotary heat exchanger:
  - Standard aluminium condensation model,
  - Hygroscopic,
  - Epoxy: ideal for corrosive atmospheres (i.e. marine).
- Cross-current heat exchanger (ErP 2018 compliant depending on model) in standard aluminium or epoxy. Corrosion-resistant stainless steel condensate collection tray and built-in adjustable by-pass depending on model.
- Run-around coil heat exchanger (twin coil).
- Choice of filters to ensure air quality: panel or bag filters G4 or M5 (Coarse 85%) and bag filters F7 (ePM1 55%). Other types upon request.
- Built-in switch depending on model.
- EXcon 100% Plug & Play controls:
  - Constant airflow,
  - Constant pressure,
  - Airflow varied using CO_2/VOC sensor (0-10 V signal),
  - Regulated pressure:
    Optimum pressure control used to adapt pressure setpoint according to airflow measured, ensuring energy efficiency,
  - Temperature control,
  - Built-in clock: operating hours can be controlled with timer.
- Configuration and monitoring via remote touch-screen control.
- BMS communication protocols:
  - Built-in web server TCP/IP RJ45,
  - ModbusRTU RS485,
  - BACnet TCP/IP,
  - LON (option).
- Version without controls also available.

FIELD OF APPLICATION

- Exhaust/air supply or heat recovery ventilation for energy-efficient commercial buildings of all types: offices, schools, shops, etc.
- Filtration, pre-heating and cooling of supply air.

INSTALLATION

- Equipment rooms/flat roofs.
- Indoors/outdoors.
- In-line duct connection or choice of having two vertical branch connectors.
- Connection by rectangular branch connectors.
- Choice of left or right side for ancillaries.

RANGE

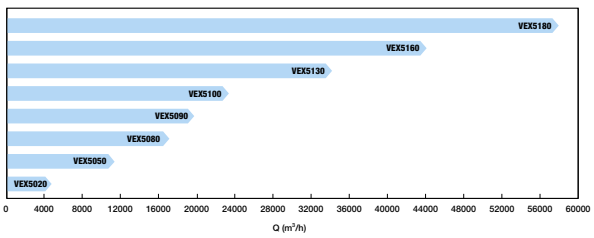

The capacities for each model are indications as per EcoDesign ErP 2018. Consult the EXselectPRO software for the details of each unit.

DIMENSIONS (mm) - WEIGHT (kg)

Dimensions can vary due to the modular design: make your selection in the EXSelect PRO software program to obtain the actual characteristics of your unit.

ACCESSORIES

- Panel filters G4 or pre-filter.
- Panel or bag filters M5 (Coarse 85%).
- Bag filters F7 (ePM1 55%).
- Others type of filter upon request.

To ensure good indoor air quality and energy efficiency of your unit, we advise changing your G4/M5 (Coarse 85%) filter every three months and your F7 (ePM1 55%) /F9 (ePM1 80%) filter every six months, or when the filter monitoring alarm is triggered. These intervals can vary according to the pollution level. For further information, please contact us.

AVAILABLE OPTIONS

- Version with or without Excon control.
- Delivery possible assembled on base frame or legs for easier installation or in separate modules for ease of site access.
- Outdoor version assembled and mounted on base frame. Factory-mounted cowl, rain hood with bird protection screen.
- Inspection ports with lighting.
- Hot water coil.
- Cold water coil.
- Electrical heater with TRIAC controls.
- Direct expansion cold coil (DX-).
- Recycling box fan.
- High-efficiency rotary heat exchanger.
- Epoxy or hygroscopic rotary heat exchanger.
- Crossed or run-around/twin coil heat exchanger.
- Motorised dampers.

SELECTION SOFTWARE

Available shortly in EXselectPRO, it offers simple, user-friendly selection of the VEX5000 that matches your needs and the building configuration. Free download on web.

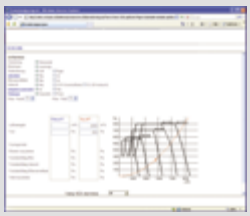

(1) Compliant with Eco-design Regulation 1253/2014
(2) Involvement in the Eurovent Certita Certification programme for air handling units (AHU); certified data for certified models are list in the Eurovent Directory

Air handling units

Fresh air units

COMPO

PRODUCT ADVANTAGES

- *Compact, modular handling units.*
- *Airflow up to 6,500 m³/h with filter (under 200 Pa).*
- *Low-consumption motor.*

RANGE

Designation	Reference
COMPO P1	11034000
COMPO P2	11034001
COMPO U0	11034002
COMPO U2	11034003
COMPO U3	11034004
COMPO U4	11034005
COMPO M4	11034006
COMPO M8	11034007

DESCRIPTION

- Eight models of air handling box fans for customisation up to 6,500 m³/h with filter (under 200 Pa) using the Selector DFE selection software program.
- Self-supporting construction with double-skin panels.
- Anodised aluminium finish, pre-painted RAL 9002.
- 30 mm mineral wool insulation (class A1).
- Low-consumption motor.
- Several control modes available:
  - Constant airflow,
  - Constant pressure,
  - Signal 0-10 V.
- Choice of filter to guarantee air quality: pleated panel filter G4 and F7.
- Communication option with BMS in RTU Modbus (requires SAT ModBus option).
- Configuration and control via radio-controlled remote control or touch-screen control (additional accessory).
- Built-in clock optional.

FIELD OF APPLICATION

- Exhaust/air supply ventilation intended for commercial premises: offices, schools, shops, etc.

INSTALLATION

- Technical rooms/terraces.
- Indoors/outdoors.
- Choice of left or right side for ancillaries.

ACCESSORIES

- Damper.
- Awning.
- Bladed grille.
- Flexible connection sleeve.
- Two-way box fans (can be motorised).

AVAILABLE OPTIONS

- Hot water coil 2 or 4 rows.
- Cold water coil 4 rows or dx.
- Electrical heater.
- Filter G4, F7 or filter box.

DIMENSIONS (mm) - WEIGHT (kg)*

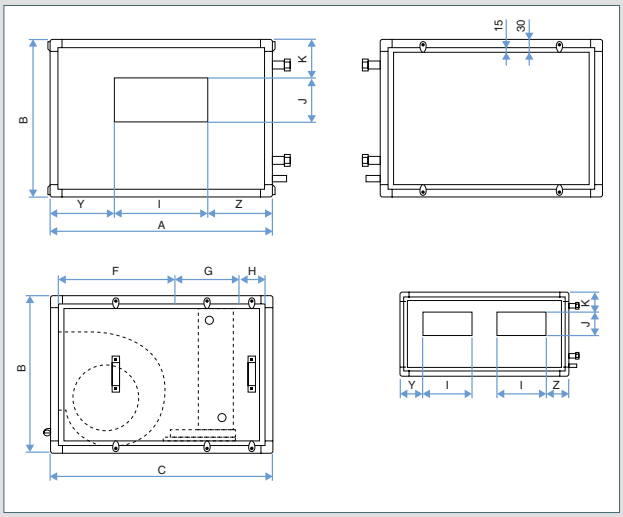

Model	A (mm)	B (mm)	C (mm)	Weight (kg)
COMPO P1	890	340	890	66
COMPO P2	890	430	890	80
COMPO U0	430	430	430	46
COMPO U2	530	530	530	57
COMPO U3	630	630	630	71
COMPO U4	890	890	890	111
COMPO M4	890	630	630	90
COMPO M8	1430	630	630	140

*Dimensions and weights are given as a guide only, as per a configuration with cold water coil, G4 filter and fan.
Make your selection in DFE Selector Suite to obtain the actual characteristics of your unit.

Air handling units

Circular coils

Uncontrolled circular electrical heater

PRODUCT ADVANTAGES

- *Pre-heating supply air.*
- *Simple to use.*
- *Homogeneous heating over the entire air passage.*
- *Manual and automatic temperature limit control.*

RANGE

Designation	Reference	Discount family
SINGLE-PHASE		
BCA Ø 125 - 0.5 kW - 1C	11090750	***07***
BCA Ø 125 - 1 kW - 1C	11090751	***07***
BCA Ø 160 - 0.5 kW - 1C	11090752	***07***
BCA Ø 160 - 1 kW - 2C	11090753	***07***
BCA Ø 160 - 1.5 kW - 1C	11090754	***07***
BCA Ø 200 - 1 kW - 1C	11090755	***07***
BCA Ø 200 - 2 kW - 1C	11090756	***07***
BCA Ø 200 - 3 kW - 1C	11090757	***07***
BCA Ø 250 - 1 kW - 1C	11090758	***07***
BCA Ø 250 - 2 kW - 1C	11090759	***07***
BCA Ø 250 - 3 kW - 1C	11090760	***07***
BCA Ø 250 - 4.5 kW - 2C	11090761	***07***
BCA Ø 315 - 1 kW - 1C	11090762	***07***
BCA Ø 315 - 2 kW - 1C	11090763	***07***
BCA Ø 315 - 4 kW - 2C	11090764	***07***
BCA Ø 315 - 6 kW - 2C	11090765	***07***
BCA Ø 355 - 4 kW - 2C	11090767	***07***
BCA Ø 355 - 6 kW - 2C	11090768	***07***
BCA Ø 400 - 3 kW - 1C	11090770	***07***
BCA Ø 400 - 6 kW - 2C	11090771	***07***
BCA Ø 450 - 5 kW - 2C	11090772	***07***
BCA Ø 450 - 9 kW - 3C	11090773	***07***
BCA Ø 500 - 12 kW - 3C	11090775	***07***
BCA Ø 630 - 18 kW - 3C	11090777	***07***
3-PHASE		
BCA Ø 500 - 18 kW - 6C	11090780	***07***
BCA Ø 500 - 30 kW - 6C	11090781	***07***
BCA Ø 500 - 36 kW - 6C	11090782	***07***
BCA Ø 630 - 18 kW - 3C	11090783	***07***
BCA Ø 630 - 30 kW - 6C	11090784	***07***
BCA Ø 630 - 36 kW - 6C	11090785	***07***

xC: x indicates the number of circuits.

DESCRIPTION

- Galvanised steel shell with seals.
- Stainless steel circuit AISI 321 L.
- Single-phase 230 V or 3-phase 400 V power supply.
- Available with 1, 2 or 3 shielded circuits (1C, 2C or 3C).
- IP 40 box.
- Automatic and manual temperature limit control (60°C/120°C up to Ø 250, 79°C/113°C beyond.

FIELD OF APPLICATION

- Aeraulic heating for commercial or industrial buildings.
- Circular connection to standard ducts.

DIMENSIONS (mm) - WEIGHT (kg)

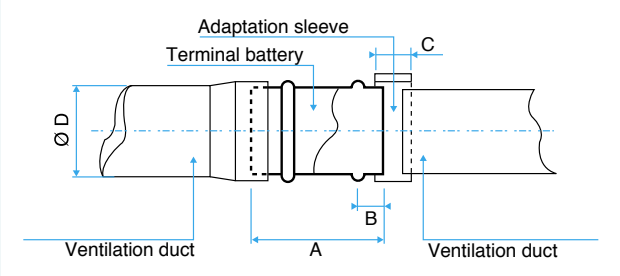

Ø D (mm)	A (mm)	B (mm)	C (mm)	Weight (kg)
125	300	50	120	3 - 4
150	300	50	120	3.5 - 5
200	300	50	120	4 - 5.5
250	300	50	120	4.5 - 6.5
315	300	50	120	5.5 - 7.5
355	300	50	120	6.5 - 8
400	300	80	250	7 - 8.5
450	300	80	250	7.5 - 9
500	350	80	250	8 - 10.5
630	350	80	250	9.5 - 12

AERAULIC CHARACTERISTICS

Air speed in duct (m/s)	DP pressure drop (Pa)
2	2
4	8
6	18
8	32

SELECTION CURVES

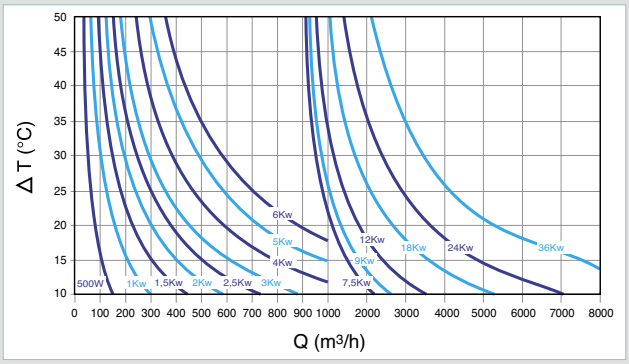

DT = temperature difference between air supply and exhaust air,
Q = airflow.

Controlled circular electrical heater

PRODUCT ADVANTAGES

- *Precise control of air supply temperature.*
- *Simple to use.*
- *Independent.*
- *Manual and automatic temperature limit control.*
- *Low temperature sensor and room thermostat.*

RANGE

Designation	Reference	Discount family
ACCESSORIES		
Duct sensor +25°C/+90°C	11090900	*07*
Duct sensor -10°C/+35°C	11090902	*07*
Room thermostat	11090903	*07*
Weekly programming thermostat 230 V	11090904	*07*
Airflow control kit (20-300 Pa)	11090901	*07*
SINGLE-PHASE		
BCA R Ø 125 - 0.5 KW	11090800	*07*
BCA R Ø 125 - 1 kW	11090801	*07*
BCA R Ø 160 - 0.75 kW	11090802	*07*
BCA R Ø 160 - 1.5 kW	11090803	*07*
BCA R Ø 200 - 1.5 kW	11090804	*07*
BCA R Ø 200 - 3 kW	11090805	*07*
BCA R Ø 250 - 2.5 kW	11090806	*07*
BCA R Ø 250 - 4.5 kW	11090807	*07*
BCA R Ø 315 - 3 kW	11090808	*07*
BCA R Ø 315 - 6 kW	11090809	*07*
BCA R Ø 355 - 7.5 kW	11090810	*07*
BCA R Ø 400 - 7.5 kW	11090811	*07*
3-PHASE		
BCA R Ø 160 - 4.5 kW	11090820	*07*
BCA R Ø 200 - 6 kW	11090821	*07*
BCA R Ø 250 - 4.5 kW	11090822	*07*
BCA R Ø 250 - 9 kW	11090823	*07*
BCA R Ø 315 - 6 kW	11090824	*07*
BCA R Ø 315 - 12 kW	11090825	*07*
BCA R Ø 355 - 6 kW	11090826	*07*
BCA R Ø 355 - 12 kW	11090827	*07*
BCA R Ø 400 - 7.5 kW	11090828	*07*
BCA R Ø 400 - 15 kW	11090829	*07*
BCA R Ø 450 - 9 kW	11090830	*07*
BCA R Ø 450 - 18 kW	11090831	*07*
BCA R Ø 500 - 9 kW	11090832	*07*
BCA R Ø 500 - 18 kW	11090833	*07*
BCA R Ø 560 - 12 kW	11090834	*07*
BCA R Ø 560 - 24 kW	11090835	*07*
BCA R Ø 630 - 12 kW	11090836	*07*
BCA R Ø 630 - 24 kW	11090837	*07*

DESCRIPTION

- Galvanised steel shell with seals. IP 40 control box. Controlled by potentiometer in box.
- Automatic and manual temperature limit control (60°C/120°C up to Ø 250, 79°C/113°C beyond.
- Four inputs: pressure switch for airflow control, duct sensor, room thermostat and external control.

FIELD OF APPLICATION

- Controlled heating of supply air in CMEV ductwork.

DIMENSIONS (mm) - WEIGHT (kg)

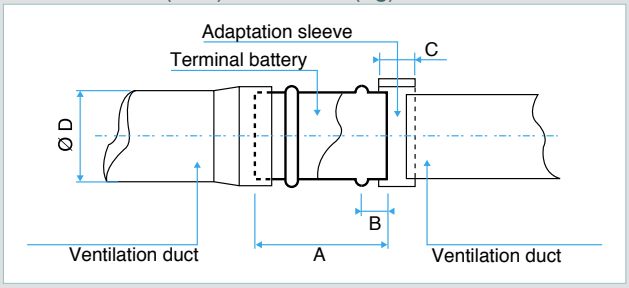

Ø D (mm)	A (mm)	B (mm)	C (mm)	Weight (kg)
125	500	50	120	3 - 4
160	500	50	120	3.5 - 5
200	500	50	120	4 - 5.5
250	500	50	120	4.5 - 6.5
315	500	50	120	5.5 - 7.5
355	500	50	120	6.5 - 8
400	500	80	250	7 - 8.5
450	500	80	250	7.5 - 9
500	500	80	250	8 - 10.5
560	500	80	250	9 - 11.5
630	500	80	250	9.5 - 12

ELECTRICAL CHARACTERISTICS

M = single-phase, T = 3-phase, I = current

BCA R	M 0.5 kw	M 0.75 kw	M 1 kw	M 1.5 kw	M 2.5 kw	M 3 kw	M 4.5 kw
I (A)	2.2	3.3	4.4	6.6	10.1	13.2	19.8
BCA R	M 6 kw	M 7.5 kw	4.5 kw	5 kw	6 kw	7.5 kw	9 kw
I (A)	26.4	33	6.5	7.2	8.7	10.8	13
BCA R	12 kw	15 kw	18 kw	24 kw	36 kw		
I (A)	17.4	21.6	26	34.8	52.2		

SELECTION CURVES

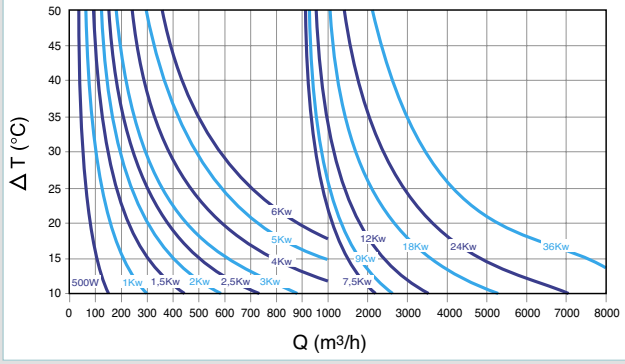

DT = temperature difference between air supply and exhaust air, Q = airflow.

MONO circular electrical heater with AHU-controlled relay

PRODUCT ADVANTAGES

- *Pre-heating supply air.*
- *Simple to use.*
- *Homogeneous heating over the entire air passage.*
- *Manual and automatic temperature limit control.*

RANGE

Designation	Reference
BCA MONO Ø 200 2.2 kW + RELAY	11090791
BCA MONO Ø 250 2.0 kW + RELAY	11090792
BCA MONO Ø 250 4.5 kW + RELAY	11090793
BCA MONO Ø 315 4.0 kW + RELAY	11090794
BCA MONO Ø 315 6.0 kW + RELAY	11090795
BCA MONO Ø 355 4.0 kW + RELAY	11090796
BCA MONO Ø 355 6.0 kW + RELAY	11090797
BCA MONO Ø 400 6.0 kW + RELAY	11090798
Sat BA kit	11058443
Three sensor kit	11058091

DESCRIPTION

- Galvanised steel shell with seals.
- Stainless steel circuit AISI 321 L.
- Single-phase 230 V or 3-phase 400 V power supply.
- Available with 1, 2 or 3 shielded circuits (1C, 2C or 3C).
- IP 40 box.
- Automatic and manual temperature limit control (60°C/120°C up to Ø 250, 79°C/113°C beyond.

FIELD OF APPLICATION

- Circular pre-heating electrical heater to be connected to control of heat recovery units.
- PLAN for SAT BA kit to be combine with DFE, DFE TOP and DFE COMPACT controls.
- Aeraulic heating for commercial or industrial buildings.
- Circular connection to standard ducts.

DIMENSIONS (mm) - WEIGHT (kg)

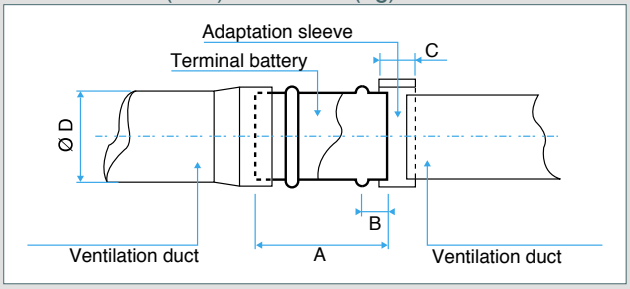

Ø D (mm)	A (mm)	B (mm)	C (mm)	Weight (kg)
200	300	50	120	4 - 5.5
250	300	50	120	4.5 - 6.5
315	300	50	120	5.5 - 7.5
355	300	50	120	6.5 - 8
400	300	80	250	7 - 8.5

AERAULIC CHARACTERISTICS

Air speed in duct (m/s)	DP pressure drop (Pa)
2	2
4	8
6	18
8	32

SELECTION CURVES

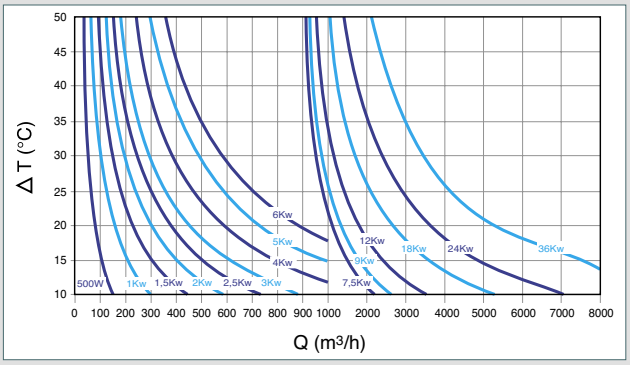

DT = temperature difference between air supply and exhaust air, Q = airflow

External coils

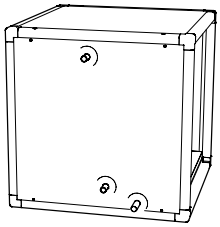

RANGE

Designation	Double-row water coil	Four-row water coil	Cold water coil	Direct expansion coil (+/-)	Cowl for coil
800	11090233	11090234	11090235	11090236	11090237
1200	11090238	11090239	11090240	11090241	11090242
2000	11090243	11090244	11090245	11090246	11090247
3000	11090248	11090249	11090250	11090251	Consult us
4000	11090253	11090254	11090255	11090256	11090257
5000/6000	11090258	11090259	11090260	11090261	11090262

DESCRIPTION

- Eighteen models of hydraulic coil (hot/cold) in box fans equipped with stainless steel condensate collection trays (cold water coils only).
- Six models of direct expansion coil with DX 4-row (evaporation/condensation) in box fans equipped with a stainless steel condensate collection trays.
- 30 mm insulation galvanised steel double-skin.
- Motorised 3-way valve kit, SAT BA and temperature sensors to be ordered as accessories.

FIELD OF APPLICATION

- Box fan coils for additional heating or cooling to a heat recovery ventilation unit.
- The coil controls the temperature of air supplied to the room.

INSTALLATION

- Outdoors (with added cowl) or indoors.
- The SAT BA accessory serves to control the water coils from the TAC5 control on DFE units.

ACCESSORIES

Designation	Reference	Discount family
Motorised 1.6 3-way valve + SAT module + sensor KIT	11090263	***07***
Motorised 2.5 3-way valve + SAT module + sensor KIT	11090264	***07***
Motorised 4.0 3-way valve + SAT module + sensor KIT	11090265	***07***
Motorised 6.3 3-way valve + SAT module + sensor KIT	11090266	***07***
Motorised 10 3-way valve + SAT module + sensor KIT	11090267	***07***
Condensate pump for coil box fan	11090268	***07***

DIMENSIONS (mm) - WEIGHT (kg)

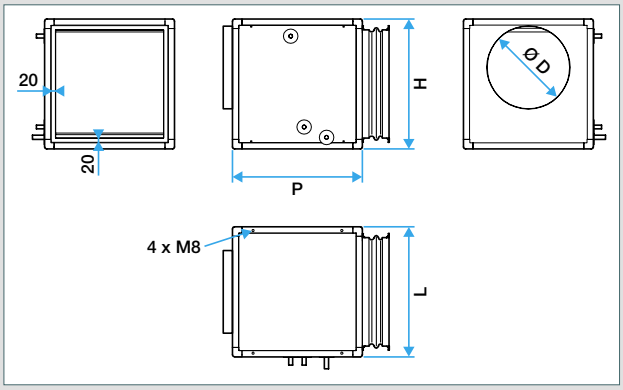

Designation	Hydraulic connector to water coil	H (mm)	D (mm)	W (mm)	Ø D (mm)
800	3/4"	578.5	678.5	578.5	315
1200	3/4"	478.5	678.5	938.5	355
2000	3/4"	678.5	678.5	678.5	400
3000	1"	678.5	678.5	938.5	450
4000	1"	678.5	678.5	1478.5	-
5000	1"	678.5	678.5	1478.5	-
6000	1"	678.5	678.5	1478.5	-

WEIGHT (kg)

Designation	Double-row water coil	Four-row water coil	Cold water coil	Direct expansion coil (+/-)
800	38	39,6	42,6	42,6
1200	48	50	54	54
2000	43,4	46,4	51,4	51,4
3000	54,6	58,6	62,6	62,6
4000	54	61	67	67
5000 / 6000	61	68	74	74

External coils

TECHNICAL DETAILS

Type of coil	Water regime (°C)	Power (kW)[2]	Temperature delta (°C) [2]	Drop in air pressure (Pa) [3]	Water flow (l/h)[3]	Drop in water pressure (kPa) [3]
800						
Four-row water	80/60	11.9/6.5	44/48	31	522	1.0
Four-row water	40/35	4.2/2.2	16/17	29	503	1.1
Four-row water	7/12	2.0/1.3	8/10	32	482	1.3
Direct expansion[1]	Dx 4°	5.2/3.1	12/14	38	124.9	3.8
1200						
Four-row water	80/60	18.3/10.0	45/50	33	804	2.4
Four-row water	40/35	6.5/3.4	16/17	31	1132	4.9
Four-row water	7/12	5.6/2.7	10/10	37	965	4.6
Direct expansion[1]	Dx 4°	8.2/4.7	13/14	41	196.9	10.3
2000						
Four-row water	80/60	27.2/15.5	40/46	65	1196	4.5
Four-row water	40/35	9.8/5.4	14/16	61	1694	9.4
Four-row water	7/12	8.1/4.5	9/10	74	1379	8.1
Direct expansion[1]	Dx 4°	10.8/6.7	10/13	80	261.6	7.6
3000						
Four-row water	80/60	41.3/23.5	41/47	64	1815	5
Four-row water	40/35	14.8/8.2	15/16	61	2569	10.5
Four-row water	7/12	12.6/7.3	9/10	75	2162	9.5
Direct expansion[1]	Dx 4°	17.5/10.2	11/13	81	422.9	15.2
4000						
Four-row water	80/60	59.3/33.2	44/49	43	2616	5.9
Four-row water	40/35	21.3/11.5	16/17	40	3690	12.4
Four-row water	7/12	19.1/10.9	10/11	50	3276	12.9
Direct expansion[1]	Dx 4°	25.3/14.8	12/14	53	611.3	11.3
5000						
Four-row water	80/60	70.4/39.9	42/47	59	3092	8.1
Four-row water	40/35	25.0/13.7	15/16	56	4341	16.7
Four-row water	7/12	22.2/13.0	9/11	70	3811	2.7
Direct expansion[1]	Dx 4°	29.8/17.3	11/13	74	719.5	15.8
6000						
Four-row water	80/60	80.6/46.3	40/46	78	3644	10.4
Four-row water	40/35	28.7/16	14/16	74	4984	22.6
Four-row water	7/12	25.2/15	9/10	92	4319	20.2
Direct expansion[1]	Dx 4°	34/19.7	11/12	98	820.7	20.8

(1) R410A/evaporation temperature 4°C
(2) Calculated at 100% and 50% of maximum flow
(3) Calculated at maximum flow

Water regime (°C)	Conditions of use
80/60	Outdoor air: -10°C and 90% RH, Indoor +22°C and 50% RH, T° air supply without coil: 19°C
40/35	
7/12	Outdoor air: 30°C and 40% RH, Indoor +22°C and 50% RH, T° air supply without coil: 23.5°C
Dx 4°	Outdoor air: 30°C and 40% RH, Indoor air: +22°C and 50% RH, T° air supply without coil: 23.5°C

Compact external coils

RANGE

Designation	Double-row water coil	Four-row water coil	Cold water coil	Direct expansion coil (+/-)
450/600	11090220	11090221	11090222	11090223
800/1000	11090224	11090225	11090226	11090227
1200	11090228	11090229	11090230	11090232
1300/1600/2000	11090228	11090229	11090231	11090232

DESCRIPTION

- Ten models of hydraulic coil (hot/cold) in box fans with circular branch connectors equipped with stainless steel condensate collection trays (cold water coils only).
- Three models of direct expansion coil DX 4-row (evaporation/condensation) in box fans with circular branch connectors and stainless steel condensate collection tray.

FIELD OF APPLICATION

- 15 mm insulation galvanised steel double-skin.
- Motorised 3-way valve kit, SAT BA and temperature sensors to be ordered as accessories.
- Box fan coils for additional heating or cooling to a heat recovery ventilation unit.
- The coil controls the temperature of air supplied to the room.

INSTALLATION

- Indoors in an equipment room or technical ceiling.
- The SAT BA accessory serves to control the water coils from the TAC5 control on DFE units.

ACCESSORIES

Designation	Reference	Discount family
Motorised 1.6 3-way valve + SAT module + sensor KIT	11090263	***07***
Motorised 2.5 3-way valve + SAT module + sensor KIT	11090264	***07***
Motorised 4.0 3-way valve + SAT module + sensor KIT	11090265	***07***
Motorised 6.3 3-way valve + SAT module + sensor KIT	11090266	***07***
Motorised 10 3-way valve + SAT module + sensor KIT	11090267	***07***
Condensate pump for coil box fan	11090268	***07***

DIMENSIONS (mm) - WEIGHT (kg)

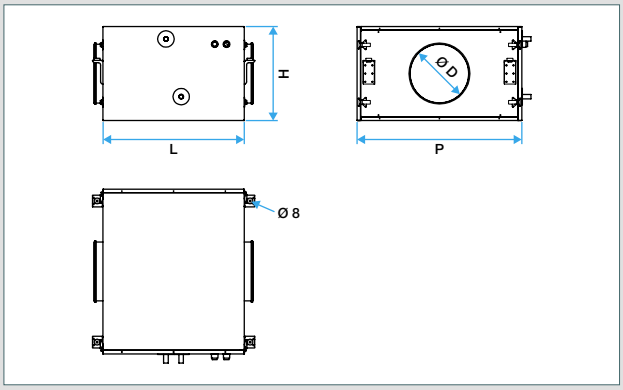

Water coil (hot/cold)

Designation	Connection Ø	P (mm)	H (mm)	L (mm)	Ø D (mm)
BAT 450/600	3/4"	320	500	500	250
BAT 800/1000	3/4"	400	700	600	250
BAT 1200/1300/1600/2000	3/4"	400	900	800	315

Compact external coils

TECHNICAL DETAILS

Type of coil	Water regime (°C)	Power (kW)(2)	Temperature delta (°C) (2)	Drop in air pressure (Pa) (3)	Water flow (l/h)(3)	Drop in water pressure (kPa) (3)
450						
Four-row water	80/60	6.2/3.5	41/46	43	274	0.8
Four-row water	40/35	2.2/1.2	15/16	40	387	1.8
Four-row water	7/12	1.4/1.0	8/10	44	239	0.9
Direct expansion(1)	Dx 4°	2.5/1.6	11/13	53	61.1	0.6
600						
Four-row water	80/60	7.8/4.4	38/44	65	341	1.2
Four-row water	40/35	2.8/1.5	14/15	61	483	2.6
Four-row water	7/12	1.6/1.1	7/9	66	273	1.2
Direct expansion(1)	Dx 4°	3.0/1.9	10/12	80	73.1	0.8
800						
Four-row water	80/60	12.5/6.8	46/50	28	547	1.9
Four-row water	40/35	4.5/2.4	1717	26	773	4.0
Four-row water	7/12	3.8/2.0	10/11	32	650	3.6
Direct expansion(1)	Dx 4°	5.3/3.2	13/15	35	127.9	3.9
1000						
Four-row water	80/60	14.8/8.2	44/49	39	651	2.6
Four-row water	40/35	5.3/2.8	16/17	36	915	5.4
Four-row water	7/12	4.5/2.3	10/10	44	770	4.9
Direct expansion(1)	Dx 4°	6.1/3.7	12/14	48	147.9	4.9
1200						
Four-row water	80/60	18.3/10.2	45/50	33	806	2.4
Four-row water	40/35	6.6/3.6	16/18	31	1139	5.0
Four-row water	7/12	5.6/2.7	10/10	37	962	4.6
Direct expansion(1)	Dx 4°	8.1/4.7	13/14	41	196.5	10.2
1300						
Four-row water	80/60	17.8/11	44/49	25	785	2.8
Four-row water	40/35	6.9/3.8	16/17	23	1209	6.7
Four-row water	7/12	7/3.9	12/13	48	1194	6.7
Direct expansion(1)	Dx 4°	8.8/5	14/15	57	213	15
1600						
Four-row water	80/60	22.9/12.8	12/48	49	1006	3.6
Four-row water	40/35	8.2/4.4	15/16	46	1416	7.4
Four-row water	7/12	8.1/4.7	9/10	79	1394	8.9
Direct expansion(1)	Dx 4°	10.1/5.7	12/13	62	243.6	16
2000						
Four-row water	80/60	27.1/15.5	40/46	68	1191	4.8
Four-row water	40/35	9.7/5.3	14/16	64	1680	10.1
Four-row water	7/12	8.1/4.7	9/10	79	1394	8.9
Direct expansion(1)	Dx 4°	1.9/6.9	11/13	86	286	22.5

(1) R410A/evaporation temperature 4°C
(2) Calculated at 100% and 50% of maximum flow
(3) Calculated at maximum flow

Water regime (°C)	Conditions of use
80/60	Outdoor air: -10°C and 90% RH, Indoor +22°C and 50% RH, T° air supply without coil: 19°C
40/35	
7/12	Outdoor air: 30°C and 40% RH, Indoor +22°C and 50% RH, T° air supply without coil: 23.5°C
Dx 4°	Outdoor air: 30°C and 40% RH, Indoor air: +22°C and 50% RH, T° air supply without coil: 23.5°C

EasyVEC® range
ATTRACTIVE AND SMART DESIGN

Here, each detail has been thought out to make installation and maintenance much easier.

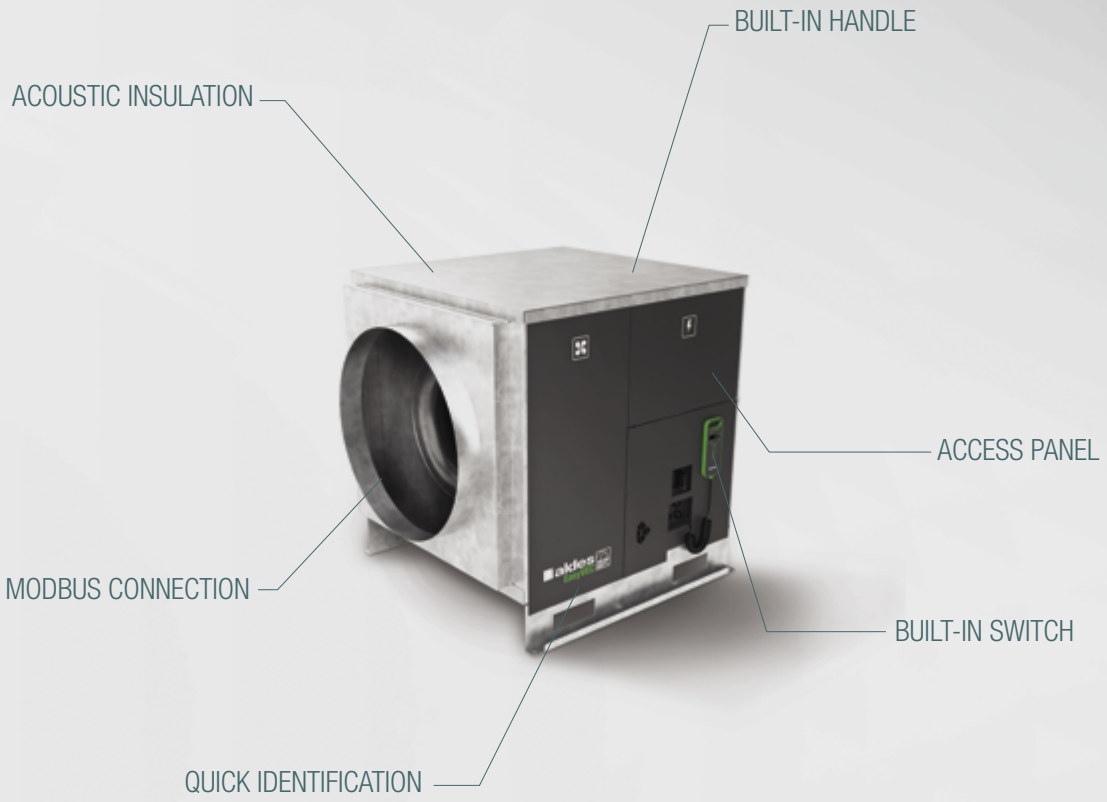

Image not contractually binding.

TWICE AS FAST TO CONFIGURE [1] :

- **Remote control available on the micro-watt and micro-watt+ ranges**
- **Configuration tutorials on Youtube for getting started easily**

EASY CHOICE BETWEEN: 4 AVAILABLE MODELS:

- **Controlled pressure[2]**
- **Constant pressure**
- **Constant airflow[2]**
- **0-10 V control**

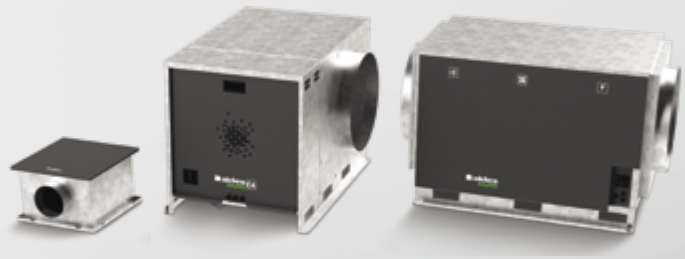

[1] Compared with products equipped with frequency regulator. Remote control as standard on micro-watt and micro-watt+ versions.
[2] Only on micro-watt+ version.

CMEV box fans

EasyVEC® commercial selection guide

EasyVEC® RANGE UP TO 3,000 M³/H			MODEL				
			300	600	1000	2000	3000
EasyVEC® MICRO-WATT+		With options	11034630	11034631	11034632	11034633	11034546
EasyVEC® MICRO-WATT		In-line	11034596	11034597	11034598	11034599	11034543
		In-line + insulation	11034612	11034613	11034614	11034615	11034544
		With options	11034580	11034581	11034582	11034583	11034545
EasyVEC® STANDARD		In-line	11034548	11034549	11034550	11034551	11034540
		In-line + insulation	11034564	11034565	11034566	11034567	11034541
		With options	11034500	11034501	11034502	11034503	11034542

EasyVEC® RANGE FROM 4,000 TO 12,000 M³/H			MODEL					
			4000	5000	6500	8000	10000	12000
EasyVEC® MICRO-WATT+		With options	11034638	11034639	11034640	11034641	11034642	11034643
EasyVEC® MICRO-WATT		With options	11034588	11034589	11034590	11034591	11034592	11034593
EasyVEC® STANDARD		With options	11034508	11034509	11034510	11034511	11034512	11034513

EasyVEC® commercial selection guide

DESIGN		EQUIPMENT			CONTROL					
Insulation	Removability	Proximity switch	Speed variation	Adjustable pressure	Constant pressure	Constant airflow	Regulated pressure	0-10 V	Modbus	AldesConnect® Pro
○		●		○	●	●	●	●	○	○
		●			●			●		
●		●			●			●		
○		●		○	●			●	○	○
		○								
●		●								
○		○	○	○						

DESIGN		EQUIPMENT			CONTROL					
Insulation	Removability	Proximity switch	Speed variation	Adjustable pressure	Constant pressure	Constant airflow	Regulated pressure	0-10 V	Modbus	AldesConnect® Pro
○	●	●		○	●	●	●	●	○	○
○	●	●		○	●			●	○	○
○	●	●	●	○						

● Built-in equipment ○ Optional equipment

CMEV box fans

EasyVEC® commercial range selection table

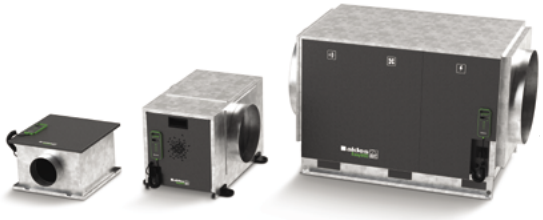

EasyVEC® Compact

EasyVEC®

THERMAL PERFORMANCE		AIRFLOWS IN M³/H	IDEAL APPLICATION: Health Education Office Shop	IDEAL APPLICATION: Sanitary commercial	IDEAL MARKET: REFURBISHMENT (RENOVATION)	IDEAL MARKET: NEW BUILDS	FUNCTION: AIR SUPPLY	FUNCTION: EXHAUST
Standard energy consumption	STANDARD	300 – 3,000	●		●		●	●
Low energy consumption	MW		●		●	●	●	●
Very low energy consumption	MW+		●			●	●	●
Standard energy consumption	STANDARD	4,000 – 12,000	●		●		●	●
Low energy consumption	MW		●		●	●	●	●
Very low energy consumption	MW+		●			●	●	●

FACTORY CONFIGURATION

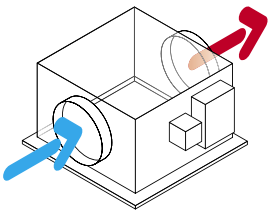

Compact model 300 to 3,000 m³/h

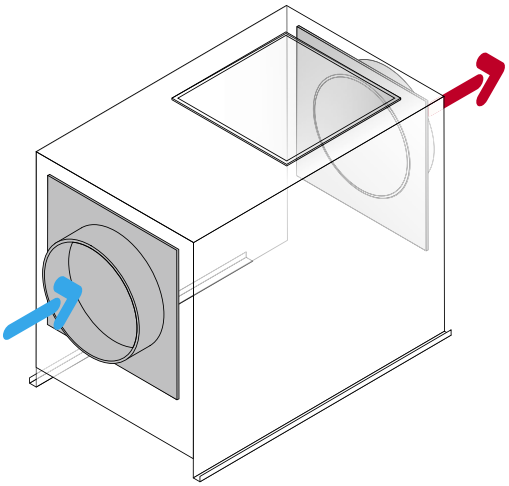

Model 4,000 to 12,000 m³/h

CHOOSE THE ACCESSORIES

Intake
Flexible air intake sleeve
Screened rain hood **(except EasyVEC® Compact)**
Discharge
Flexible discharge sleeve
Pressure switch kit
Time delay on pressure switch (if windy)
Adjustable pressure switch 20-300 Pa
Filter clogging detection kit
Acoustic accessories
Sound attenuators - OCTA with baffle (+ seal)
Sound attenuators - OCTA (+ seal)
Anti-vibration mountings
Pack of 4 elastomer mountings
Double skin insulation kit 25 mm on site **(EasyVEC® from 4,000 m³/h)**

Electrical accessories
Thermal-magnetic circuit breaker
Speed controller **(models from 4,000 m³/h)**
Speed controller **(EasyVEC® Compact 300, 600 and 1000)**
Speed controller **(EasyVEC® Compact 2000 and 3000)**
Filtering accessories except EasyVEC® Compact
G4 filters
F5 filters **(except EasyVEC® Compact)**
F7 filters
F9 filters **(except EasyVEC® Compact)**
Other accessories
Pack of four straps **(EasyVEC® Compact)**
Proximity switch **(EasyVEC® Compact)**
CO_2 sensor (0-10 V)
Electric and water coils

*Compliant with Eco-design Regulation 1253/2014 with speed controller

EasyVEC® Compact General information

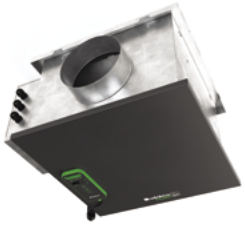

EasyVEC® Compact micro-watt and micro-watt+

EasyVEC® Compact standard

PRODUCT ADVANTAGES

- *Easy to select: Selector poWair software program.*
- *Easy to install.*
- *Easy to configure: remote control.*
- *Easy to service: single access panel, link to documentation via QR code.*
- *Very low consumption.*

COMPLIANCE

- *Technical Approval for Modulated Ventilation.*
- *ESC-eligible (details on the product sheets).*
- *ERP(1).*

DESCRIPTION

- Direct-drive backward curve impeller to optimise output and minimise size,
- Compact for mounting in suspended ceiling (462 mm max.),
- Galvanised steel box fan,
- Wide range of optional extras and accessories to meet all your needs: sound attenuators, double-skin soundproofing with 25 mm of mineral wool, G4 and F7 filters, anti-vibration feet, flexible sleeves, filter replacement indicator, pressure switch, etc.,
- Made in France.

SCOPE

- Commercial premises,
- Air exhaust/supply (via mode 0-10 V on EasyVEC® Compact micro-watt).

IMPLEMENTATION

- Horizontal/vertical (indoors only),
- Suspended ceilings/attics/equipment rooms,
- Indoors/outdoors.

ACCESSORIES

- Sound attenuators,
- Flexible intake and discharge sleeves,
- G4 and F7 filters,
- Anti-vibration devices,
- Screened rain hood.

AVAILABLE OPTIONS

- Adjustable pressure switch,
- Soundproofing,
- Modbus (except for EasyVEC® Compact standard).

DIMENSIONS (mm) - WEIGHT (kg)

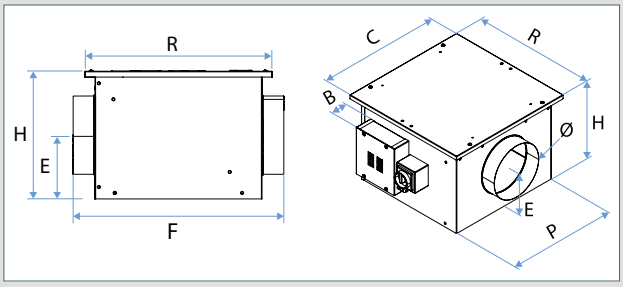

All dimensions are overall in mm.

Type	R (mm)	H (mm)	C (mm)	C+B (mm)	Ø (mm)	Weight (kg)
EasyVEC® Compact 300	432	277	432	469	160	9
EasyVEC® Compact 300 insulated	432	279	432	510	160	14
EasyVEC® Compact 600	482	327	482	519	200	12
EasyVEC® Compact 600 insulated	482	329	482	563	200	19
EasyVEC® Compact 1000	532	352	532	569	250	14
EasyVEC® Compact 1000 insulated	534	354	534	610	250	22
EasyVEC® Compact 2000	582	352	582	620	315	20
EasyVEC® Compact 2000 insulated	582	354	582	660	315	26
EasyVEC® Compact 3000	694	462	694	792	400	28
EasyVEC® Compact 3000 insulated	694	462	694	792	400	46

R = Length; H = Height; C = Width; C + B = Width with electrical box;
Ø = Branch connection diameter.

(1) Compliant with Eco-design Regulation 1253/2014.

CMEV box fans

Very low consumption

EasyVEC® Compact micro-watt+

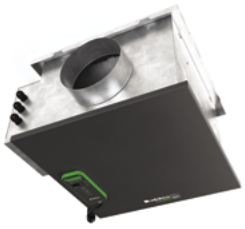

EasyVEC® Compact micro-watt+

EasyVEC® remote control

PRODUCT ADVANTAGES

- *Easy to select: Selector poWair software program.*
- *Easy to install.*
- *Easy to configure: remote control.*
- *Easy to service: single access panel, link to documentation via QR code.*
- *Very low consumption.*

COMPLIANCE

- *Technical Approval for Modulated Ventilation.*
- *ESC-eligible: BAT-TH-125.*
- *ErP[1].*

RANGE

Description	Airflow (m³/h)	Reference	Discount family
With choice of options*			
EasyVEC® Compact micro-watt+ 300 proximity switch	300	11034630	***13***
EasyVEC® Compact micro-watt+ 600 proximity switch	600	11034631	***13***
EasyVEC® Compact micro-watt+ 1000 proximity switch	1,000	11034632	***13***
EasyVEC® Compact micro-watt+ 2000 proximity switch	2,000	11034633	***13***
EasyVEC® Compact micro-watt+ 3000 proximity switch	3,000	11034546	***13***

*Price with no options. Please refer to the Accessories page for option prices.

ELECTRICAL CHARACTERISTICS

- Single-phase EC motor 230 V - 50 or 60 Hz.

Model	I max (A)	P max (W)
EasyVEC® Compact micro-watt+ 300	0.6	76
EasyVEC® Compact micro-watt+ 600	0.75	95
EasyVEC® Compact micro-watt+ 1000	1.3	164
EasyVEC® Compact micro-watt+ 2000	3.4	430
EasyVEC® Compact micro-watt+ 3000	2.2	450

DESCRIPTION

- EC motor with very low power consumption (50/60 Hz),
- Simple and intuitive remote control always within reach due to its attachment cable and magnetic holder,
- Four control modes possible: regulated pressure for lowest possible consumption or constant pressure or constant airflow or via 0-10 V external probe,
- Direct-drive backward curve impeller to optimise output and minimise size,
- Compact for mounting in suspended ceiling (462 mm max.),
- Standard proximity switch,
- Galvanised steel box fan,
- Alarm available by wiring to the electronic board,
- Wide range of optional extras and accessories to meet all your needs: double-skin soundproofing with 25 mm of mineral wool, G4 and F7 filters, filter replacement indicator, Modbus connection, pressure switch, etc.,
- Made in France.

SCOPE

- Commercial premises,
- Air exhaust/supply.

IMPLEMENTATION

- Horizontal/vertical (indoors only),
- Suspended ceilings/attics/equipment rooms/terrace,
- Indoors/outdoors.

(1) Compliant with Eco-design Regulation 1253/2014.

CMEV box fans

Very low consumption

EasyVEC® Compact micro-watt+

AERAULIC CHARACTERISTICS

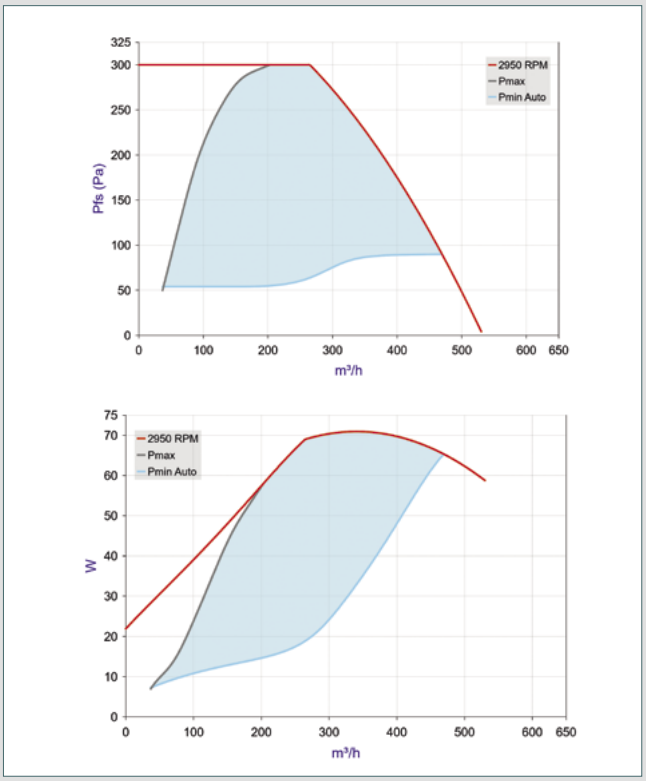

EasyVEC® Compact micro-watt+ 300

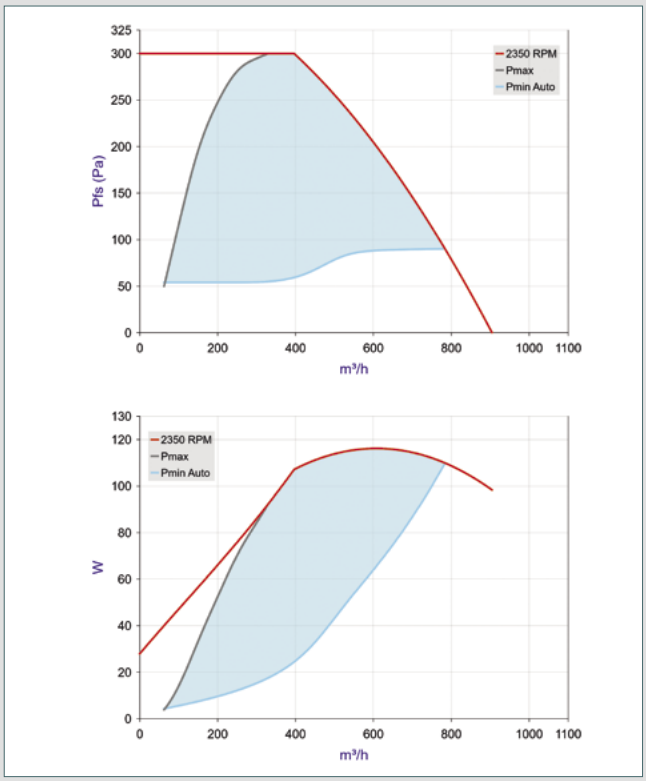

EasyVEC® Compact micro-watt+ 600

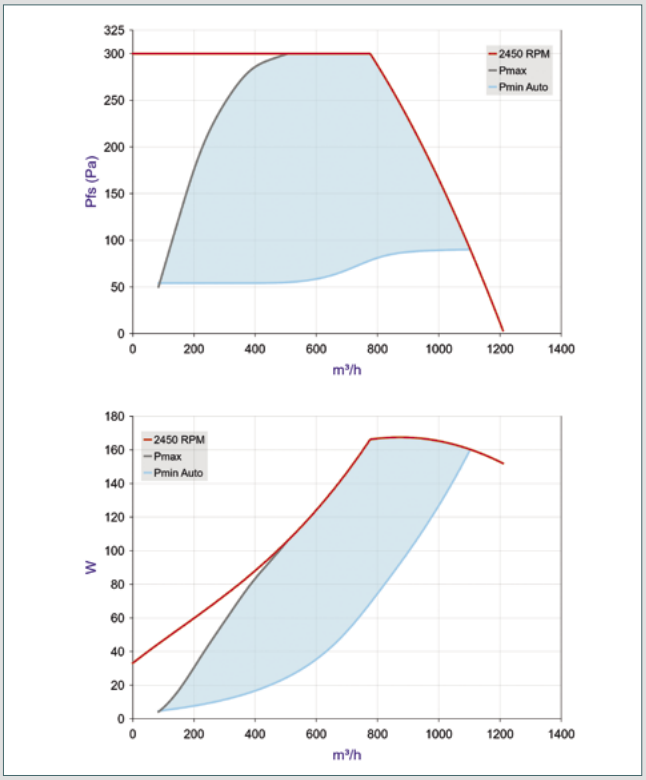

EasyVEC® Compact micro-watt+ 1000

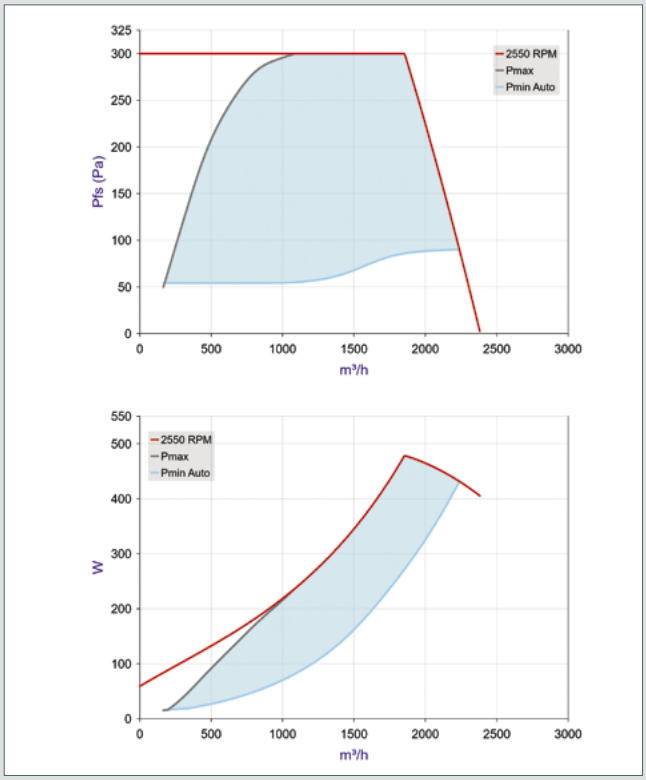

EasyVEC® Compact micro-watt+ 2000

- Aeraulic curves drawn up as per standard NF EN ISO 5801.
- P (Pa) = static pressure.
- P (W) = power consumption.

CMEV box fans

Very low consumption

EasyVEC® Compact micro-watt+

AERAULIC CHARACTERISTICS

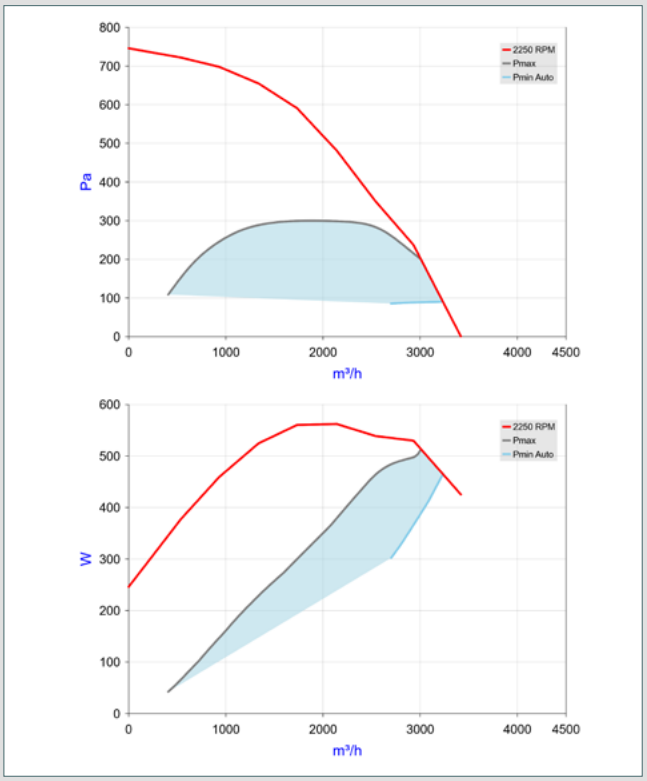

EasyVEC® Compact micro-watt+ 3000

- Aeraulic curves drawn up as per standard NF EN ISO 5801.
- P (Pa) = static pressure.
- P (W) = power consumption.

CMEV box fans

Low consumption

EasyVEC® Compact micro-watt

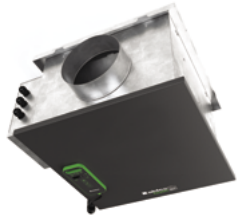

EasyVEC® micro-watt

Remote control

PRODUCT ADVANTAGES

- *Easy to select: Selector poWair software program.*
- *Easy to install.*
- *Easy to configure: remote control.*
- *Easy to service: single access panel, link to documentation via QR code.*
- *Very low consumption.*

COMPLIANCE

- *Technical Approval for Modulated Ventilation.*
- *ESC-eligible: BAT-TH-125.*
- *ErP[1].*

RANGE

Description	Airflow (m^3/h)	Reference	Discount family
NOT INSULATED			
EasyVEC® Compact micro-watt 300 proximity switch	300	11034596	***13***
EasyVEC® Compact micro-watt 600 proximity switch	600	11034597	***13***
EasyVEC® Compact micro-watt 1000 proximity switch	1000	11034598	***13***
EasyVEC® Compact micro-watt 2000 proximity switch	2000	11034599	***13***
EasyVEC® Compact micro-watt 3000 proximity switch	3000	11034543	***13***
INSULATED			
EasyVEC® Compact micro-watt 300 proximity switch, INSULATED	300	11034612	***13***
EasyVEC® Compact micro-watt 600 proximity switch, INSULATED	600	11034613	***13***
EasyVEC® Compact micro-watt 1000 proximity switch, INSULATED	1000	11034614	***13***
EasyVEC® Compact micro-watt 2000 proximity switch, INSULATED	2000	11034615	***13***
EasyVEC® Compact micro-watt 3000 proximity switch, INSULATED	3000	11034544	***13***
With choice of options*			
EasyVEC® Compact micro-watt 300 proximity switch	300	11034580	***13***
EasyVEC® Compact micro-watt 600 proximity switch	600	11034581	***13***
EasyVEC® Compact micro-watt 1000 proximity switch	1000	11034582	***13***
EasyVEC® Compact micro-watt 2000 proximity switch	2000	11034583	***13***
EasyVEC® Compact micro-watt 3000 proximity switch	3000	11034545	***13***

*Price with no options. Please refer to the Accessories page for option prices.

DESCRIPTION

- EC motor with very low power consumption (50/60 Hz),
- Simple and intuitive remote control always within reach due to its attachment cable and magnetic holder,
- 2 control modes possible: constant pressure to minimise consumption or via 0-10 V external probe,
- Direct-drive backward curve impeller to optimise output and minimise size,
- Compact for mounting in suspended ceiling (462 mm max.),
- Standard proximity switch,
- Galvanised steel box fan,
- Alarm available by wiring to the electronic board,
- Wide range of optional extras and accessories to meet all your needs: double-skin soundproofing with 25 mm of mineral wool, G4 and F7 filters, filter replacement indicator, Modbus connection, pressure switch, etc.,
- Made in France.

SCOPE

- Commercial premises,
- Air exhaust/supply (0-10 V only).

IMPLEMENTATION

- Horizontal/vertical (indoors only),
- Suspended ceilings/attics/equipment rooms/terrace,
- Indoors/outdoors.

(1) Compliant with Eco-design Regulation 1253/2014 with speed controller.

ELECTRICAL CHARACTERISTICS

- Single-phase EC motor 230 V - 50 or 60 Hz.

Model	I max (A)	P max (W)
EasyVEC® Compact micro-watt 300	0.6	76
EasyVEC® Compact micro-watt 600	0.75	95
EasyVEC® Compact micro-watt 1000	1.3	164
EasyVEC® Compact micro-watt 2000	3.4	430
EasyVEC® Compact micro-watt 3000	2.2	450

CMEV box fans

Low consumption

EasyVEC® Compact micro-watt

AERAULIC CHARACTERISTICS

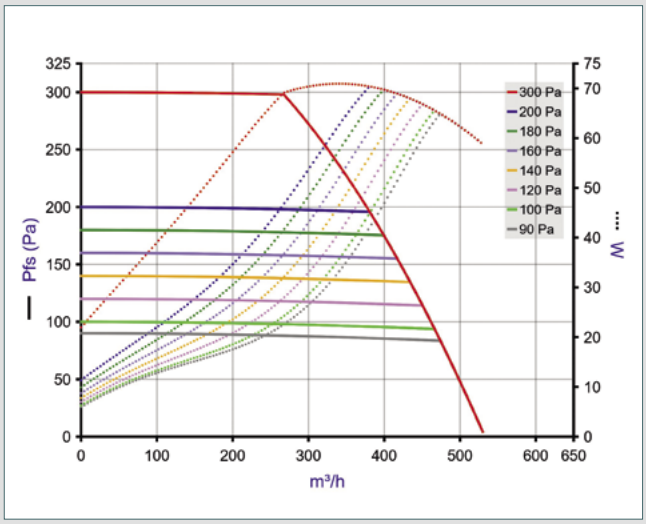

EasyVEC® Compact micro-watt 300

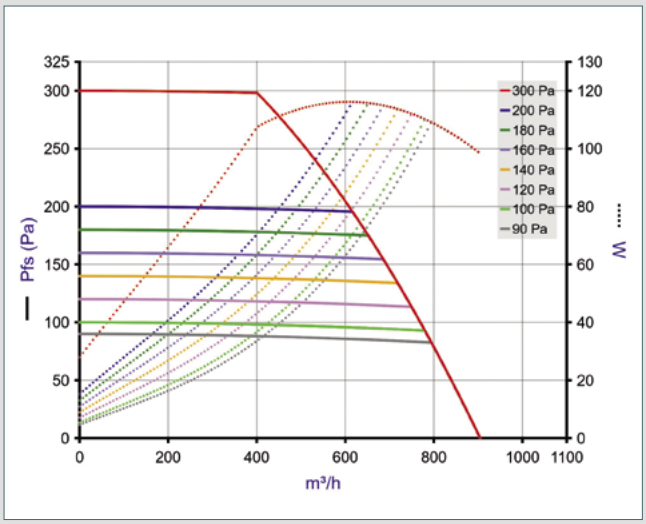

EasyVEC® Compact micro-watt 600

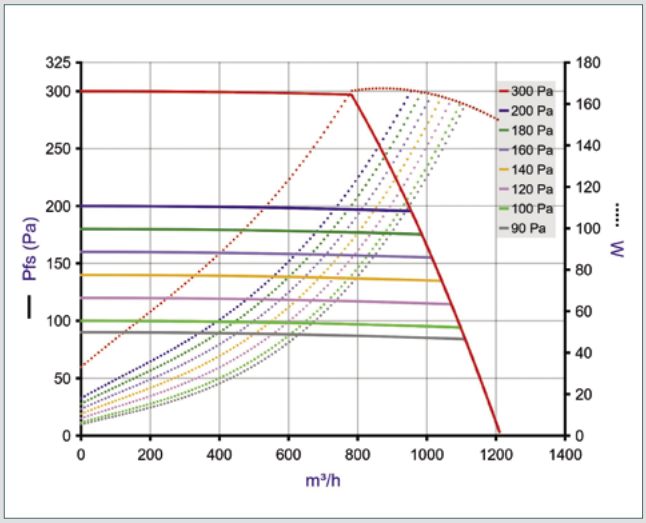

EasyVEC® Compact micro-watt 1000

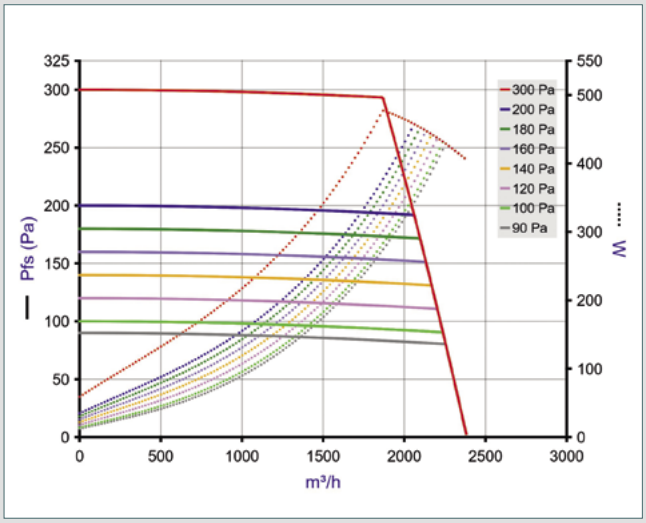

EasyVEC® Compact micro-watt 2000

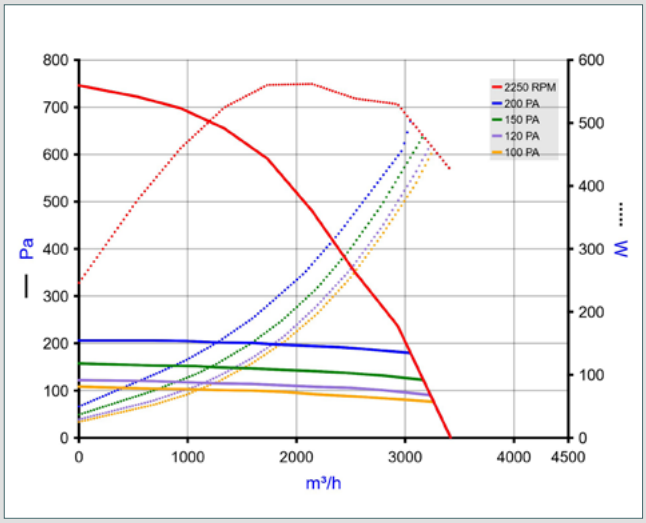

EasyVEC® Compact micro-watt 3000

- Aeraulic curves drawn up as per standard NF EN ISO 5801.
- P (Pa) = static pressure.
- P (W) = power consumption.

CMEV box fans

Standard

EasyVEC® Compact standard

EasyVEC® Compact standard

PRODUCT ADVANTAGES

- *Easy to select: Selector poWair software program.*
- *Easy to install.*
- *Easy to service: single access panel, link to documentation via QR code.*

COMPLIANCE

- *Technical Approval for Modulated Ventilation.*
- *ECS-eligible: BAT-TH-125, BAT-TH-112 (if speed controller).*
- *ErP(1).*

RANGE

Description	Airflow (m^3/h)	Reference	Discount family
NOT INSULATED			
EasyVEC® Compact 300	300	11034548	***13***
EasyVEC® Compact 600	600	11034549	***13***
EasyVEC® Compact 1000	1,000	11034550	***13***
EasyVEC® Compact 2000	2,000	11034551	***13***
EasyVEC® Compact 3000	3,000	11034540	***13***
INSULATED			
EasyVEC® Compact 300 proximity switch, INSULATED	300	11034564	***13***
EasyVEC® Compact 600 proximity switch, INSULATED	600	11034565	***13***
EasyVEC® Compact 1000 proximity switch, INSULATED	1,000	11034566	***13***
EasyVEC® Compact 2000 proximity switch, INSULATED	2,000	11034567	***13***
EasyVEC® Compact 3000 proximity switch, INSULATED	3,000	11034541	***13***
With choice of options*			
EasyVEC® Compact 300	300	11034500	***13***
EasyVEC® Compact 600	600	11034501	***13***
EasyVEC® Compact 1000	1,000	11034502	***13***
EasyVEC® Compact 2000	2,000	11034503	***13***
EasyVEC® Compact 3000	3,000	11034542	***13***

*Price with no options. Please refer to the Accessories page for option prices.

DESCRIPTION

- Direct-drive backward curve impeller to optimise output and minimise size,
- Compact for mounting in suspended ceiling (462 mm max.),
- AC motor (50/60 Hz) and EC motor (for Compact 2000 and 3000),
- Galvanised steel box fan,
- Wide range of optional extras and accessories to meet all your needs: proximity switch (compact models), double-skin soundproofing with 25 mm of mineral wool, G4 and F7 filters, filter replacement indicator, pressure switch, Epoxy protection, etc.,
- Made in France.

SCOPE

- Commercial premises,
- Air exhaust/supply.

IMPLEMENTATION

- Horizontal/vertical (indoors only),
- Suspended ceilings/attics/equipment rooms/terrace,
- Indoors/outdoors.

ACCESSORIES

Description	Reference	Discount family
Voltage controller for EasyVEC® Compact 300, 600 and 1000	11086572	***07***
Speed controller for EasyVEC® Compact 2000 and 3000	11024468	***13***

A speed controller above has to be added or chosen as an option to achieve ErP compliance.

ELECTRICAL CHARACTERISTICS

- Single-phase AC motor 230 V - 50 Hz and/or 60 Hz.

Model	I max (A)	P max (W)
EasyVEC® Compact 300	0.25	58
EasyVEC® Compact 600	0.8	184
EasyVEC® Compact 1000	1.5	345
EasyVEC® Compact 2000	3.4	782
EasyVEC® Compact 3000	2.94	618

(1) Compliant with Eco-design Regulation 1253/2014 with speed controller.

CMEV box fans

Standard

EasyVEC® Compact standard

The curves shown correspond to units with speed controllers to meet ErP requirements

AERAULIC CHARACTERISTICS

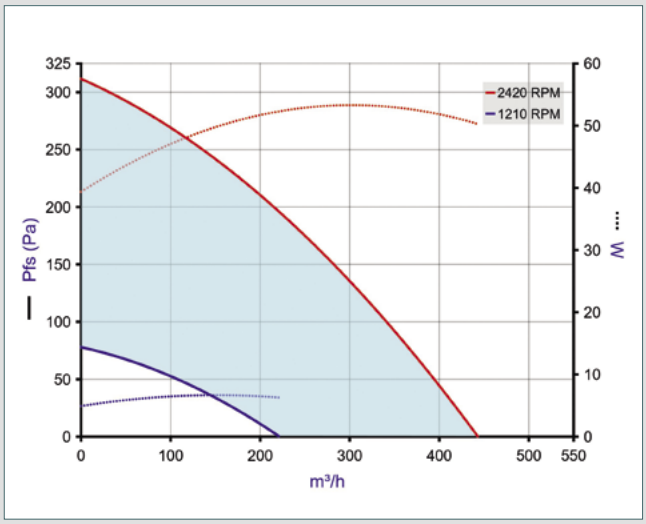

EasyVEC® Compact 300

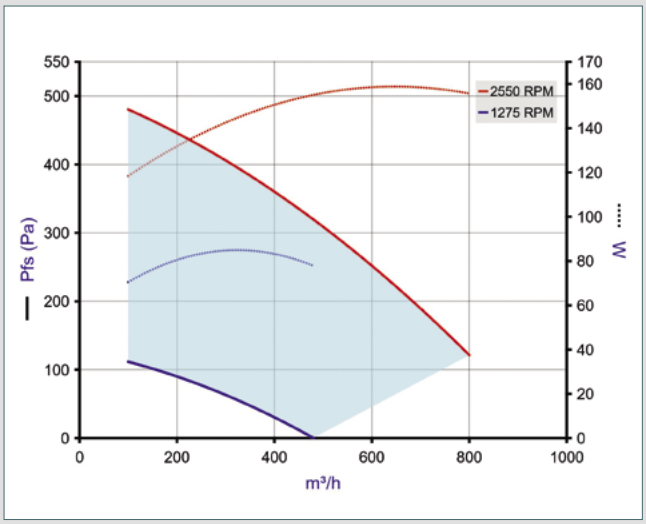

EasyVEC® Compact 600

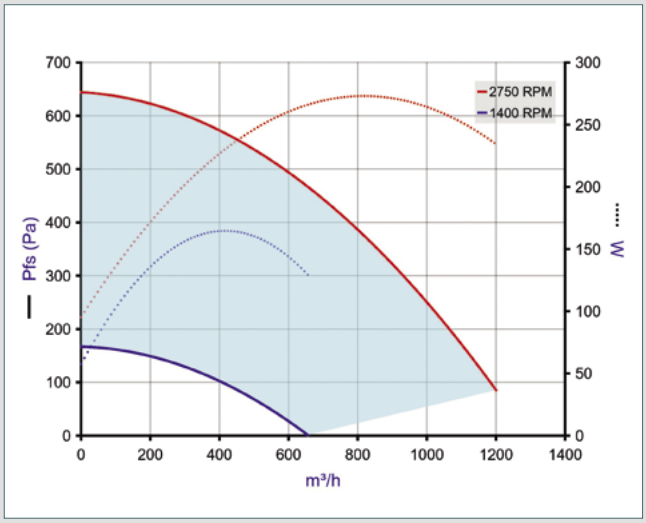

EasyVEC® Compact 1000

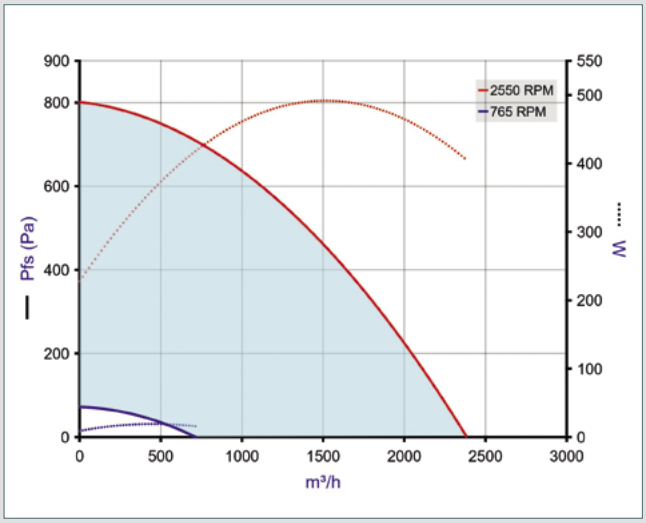

EasyVEC® Compact 2000

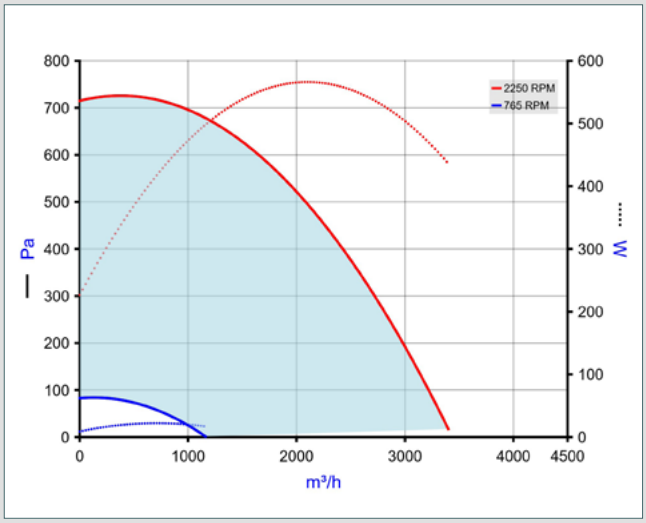

EasyVEC® Compact 3000

- Aeraulic curves drawn up as per standard NF EN ISO 5801.
- P (Pa) = static pressure.
- P (W) = power consumption.

EasyVEC® Compact accessories

ACCESSORIES - BOX FANS CROSS-REFERENCING

Models	Branch connection Ø
300	160 mm
600	200 mm
1000	250 mm
2000	315 mm
3000	400 mm

SYSTEM ACCESSORIES

Description	Reference	Discount family
Flexible air intake sleeve		
MS Pro M0 V2 Ø 160 mm	11094295	***22***
MS Pro M0 V2 Ø 200 mm	11094296	***22***
MS Pro M0 V2 Ø 250 mm	11094297	***22***
MS Pro M0 V2 Ø 315 mm	11094298	***22***
MS Pro M0 V2 Ø 400 mm	11094300	***22***
Flexible discharge sleeve		
REF MS kit. M0 Ø 160 mm	11025063	***13***
REF MS kit. M0 Ø 200 mm	11025064	***13***
REF MS kit. M0 Ø 250 mm	11025065	***13***
REF MS kit. M0 Ø 315 mm	11025066	***13***
REF MS kit. M0 Ø 400 mm	11025067	***13***
Screened rain hood		
Female screened rain hood + grille Ø 160 mm	11056101	***06***
Female screened rain hood + grille Ø 200 mm	11056102	***06***
Female screened rain hood + grille Ø 250 mm	11056373	***06***
Female screened rain hood + grille Ø 315 mm	11058205	***06***
Female screened rain hood + grille Ø 400 mm	11056100	***06***
Sound attenuators - OCTA with baffle		
OCTA with baffle 250 + seal	11094990	***22***
OCTA with baffle 315 + seal	11094991	***22***
OCTA with baffle 400 + seal	11094993	***22***
Sound attenuators - OCTA		
OCTA 160 sealed	11094633	***22***
OCTA 200 sealed	11094634	***22***
OCTA 250 sealed	11094635	***22***
OCTA 315 sealed	11094636	***22***
OCTA 400 sealed	11094638	***22***
Anti-vibration mountings		
Anti-vibration mountings (pack of 4): Shore 45/4 kg per mounting	11034385	***13***
Pack of 4 elastomer mountings	11094562	***13***
EasyVEC® Compact insulated filter boxes		
EasyVEC® Compact 300 filter boxes	11034470	***13***
EasyVEC® Compact 600 filter boxes	11034471	***13***
EasyVEC® Compact 1000 filter boxes	11034472	***13***
EasyVEC® Compact 2000 filter boxes	11034473	***13***
EasyVEC® Compact 3000 filter boxes	11034528	***13***
Filters ISO coarse 60% (G4)		
EasyVEC® Compact 300 filter ISO Coarse 60% (G4)	11034401	***13***
EasyVEC® Compact 600 filter ISO Coarse 60% (G4)	11034402	***13***
EasyVEC® Compact 1000 filter ISO Coarse 60% (G4)	11034403	***13***
EasyVEC® Compact 2000 filter ISO Coarse 60% (G4)	11034404	***13***
EasyVEC® Compact 3000 filter ISO Coarse 60% (G4)	11069066	***13***
Filter ISO ePM1 50-75% (F7)		
EasyVEC® Compact 300 filter ISO ePM1 50-75% (F7)	11034417	***13***
EasyVEC® Compact 600 filter ISO ePM1 50-75% (F7)	11034418	***13***
EasyVEC® Compact 1000 filter ISO ePM1 50-75% (F7)	11034419	***13***
EasyVEC® Compact 2000 filter ISO ePM1 50-75% (F7)	11034420	***13***
EasyVEC® Compact 3000 filter ISO ePM1 50-75% (F7)	11100427	***13***
Other accessories		
0-10 V CO2 sensor	11017090	***13***
EasyVEC® Compact fastening kit	11034437	***13***
EasyVEC® Compact hanging straps	11034433	***13***
EasyVEC® filter clogging detection kit	11056000	***13***
EasyVEC® micro-watt constant pressure air supply kit	11056001	***13***

ELECTRICAL ACCESSORIES

Description	Reference	Discount family
Circuit breaker 1.0 to 1.6 A	11056184	***07***
Circuit breaker 1.6 to 2.5 A	11057052	***07***
Circuit breaker 2.5 to 4 A	11057053	***07***
Circuit breaker 4 to 6.3 A	11057054	***07***

FILTER BOX SIZE

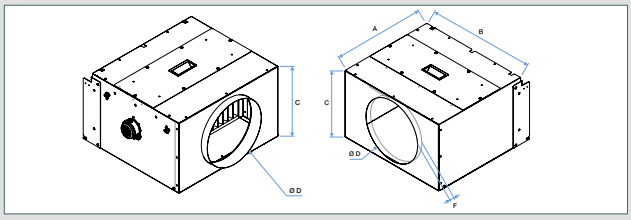

(mm)	A	B	C	Ø D	F
EasyVEC® Compact 300	506	427	281	160	29
EasyVEC® Compact 600	506	427	329	200	29
EasyVEC® Compact 1000	506	527	356	250	29
EasyVEC® Compact 2000	506	527	356	315	29
EasyVEC® Compact 3000	506	689	464	400	30

EASYVEC® COMPACT BOX FAN WITH FILTER BOX FOR AIR SUPPLY

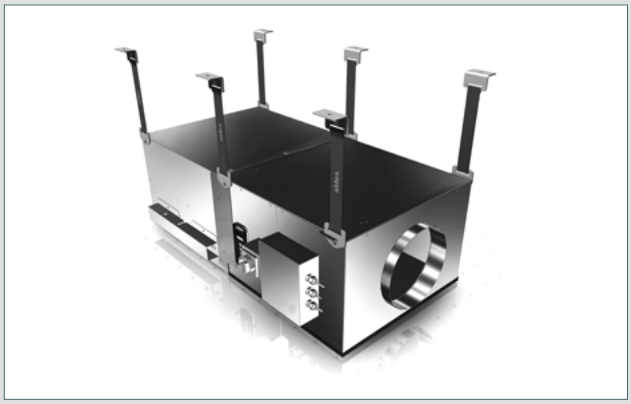

Description	Code
ADJUSTABLE PRESSURE SWITCH	ADJUSTABLE
MODBUS (except Standard models)	MODBUS
INSULATION 300 to 3000 Standard	ISOLA
SWITCH (on standard models only)	INTER2
SPEED CONTROL (on standard models only)	VARI3

CMEV box fans

EasyVEC® Commercial

EasyVEC® General information

EasyVEC® Airflow ≥ 4,000 m³/h
long casing with filter

EasyVEC® Airflow ≥ 4,000 m³/h
short casing with filter

PRODUCT ADVANTAGES

- *Easy to select: Selector poWair software program.*
- *Easy to install: modular branch connections on site.*
- *Easy to configure: remote control.*
- *Easy to service: single access panel, link to documentation via QR code.*

DESCRIPTION

- Direct-drive backward curve impeller to optimise output and minimise size,
- Standard proximity switch,
- Galvanised steel box fan,
- Models from 4,000 m³/h: can be fully dismantled for insertion in small spaces,
- Wide range of optional extras and accessories to meet all your needs: double-skin soundproofing with 25 mm of mineral wool, G4, M5, F7 and F9 filters, filter replacement indicator, pressure switch, Epoxy protection, etc.,
- Made in France.

SCOPE

- Commercial premises,
- Air exhaust/supply.

IMPLEMENTATION

- Horizontal,
- Attics/equipment rooms/flat roof,
- Indoors/outdoors.

ACCESSORIES

- Adjustable pressure switch,
- G4, M5, F7 and F9 filters,
- Anti-vibration devices included insulating feet,
- Flexible sleeves and connection sleeve kit,
- Rain hood.

AVAILABLE OPTIONS

- Dual-wall insulation 25 mm,
- Adjustable pressure switch,
- Models ≥ 4,000 m³/h: extended box fan with 2 filter rails,
- Three-phase option on Standard model.

DIMENSIONS (mm) - WEIGHT (kg)

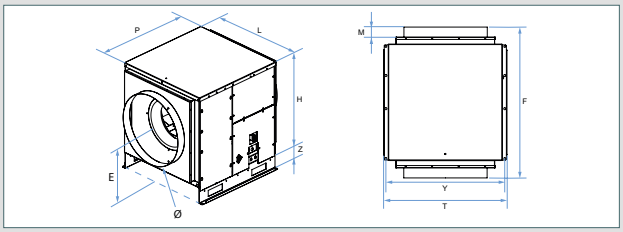

All dimensions are overall in mm.

Model	P (mm)	L (mm)	H (mm)	Ø (mm)	E (mm)	F (mm)	M (mm)	Y (mm)	T (mm)	Z (mm)	Filters option	Axone option
4000	700	690	780	500	450	910	60	720	740	115	F and P + 360	L + 195
4000 insulated	700	735	802.5	500	450	910	60	720	740	115	F and P + 360	L + 195
5000 6500 8000	765	790	875	630	500	975	60	815	835	115	F and P + 435	L + 195
5000 6500 8000 insulated	765	835	897.5	630	500	975	60	815	835	115	F and P + 435	L + 195
10000 12000	945	910	1,020	710	575	1,155	60	940	960	115	F and P + 350	L + 195
10000 12000 insulated	945	955	1,042.5	710	575	1,155	60	940	960	115	F and P + 350	L + 195

P = Depth; L = Width; H = Height; Ø = Branch connection diameter; D = Offset; E = Floor branch axis; F = Height of legs; M = Branch height; O = Setback; Y = Distance between legs; T = Footprint' Z = Height of legs.

CMEV box fans

Very low consumption

EasyVEC® micro-watt+

EasyVEC® Airflow ≥ 4,000 m³/h
long casing with filter

EasyVEC® Airflow ≥ 4,000 m³/h
short casing with filter

PRODUCT ADVANTAGES

- *Easy to select: Selector poWair software program.*
- *Easy to install: modular branch connections on site.*
- *Easy to configure: remote control on micro-watt and micro-watt+ models.*
- *Easy to service: single access panel, link to documentation via QR code.*

COMPLIANCE

- *Technical Approval for Modulated Ventilation.*
- *ESC-eligible: BAT-TH-125.*

RANGE

Description	Airflow (m³/h)	Reference	Discount family
With choice of options*			
EasyVEC® micro-watt+ 4000 proximity switch	4,000	11034638	***13***
EasyVEC® micro-watt+ 5000 proximity switch	5,000	11034639	***13***
EasyVEC® micro-watt+ 6500 proximity switch	6,500	11034640	***13***
EasyVEC® micro-watt+ 8000 proximity switch	8,000	11034641	***13***
EasyVEC® micro-watt+ 10000 proximity switch	10,000	11034642	***13***
EasyVEC® micro-watt+ 12000 proximity switch	12,000	11034643	***13***

*Price with no options. Please refer to the Accessories page for option prices.

DESCRIPTION

- EC motor with very low power consumption (50/60 Hz),
- Simple and intuitive remote control always within reach due to its attachment cable and magnetic holder,
- Four control modes possible: regulated pressure for lowest possible consumption or constant pressure or constant airflow or via 0-10 V external probe,
- Alarm available by wiring to the electronic board,
- Modbus RS, Bacnet IP and AldesConnect® Pro option.

ELECTRICAL CHARACTERISTICS

- Single-phase EC motor up to model 12000.

Model	I max (A)	P max absorbed (W)
EasyVEC® micro-watt+ 4000	5.0	700
EasyVEC® micro-watt+ 5000	8.0	1,200
EasyVEC® micro-watt+ 6500	8.3	1,250
EasyVEC® micro-watt+ 8000	12.0	1,850
EasyVEC® micro-watt+ 10000	15.7	2,200
EasyVEC® micro-watt+ 12000	20.5	3,200

CMEV box fans

Very low consumption

EasyVEC® micro-watt+

AERAULIC CHARACTERISTICS

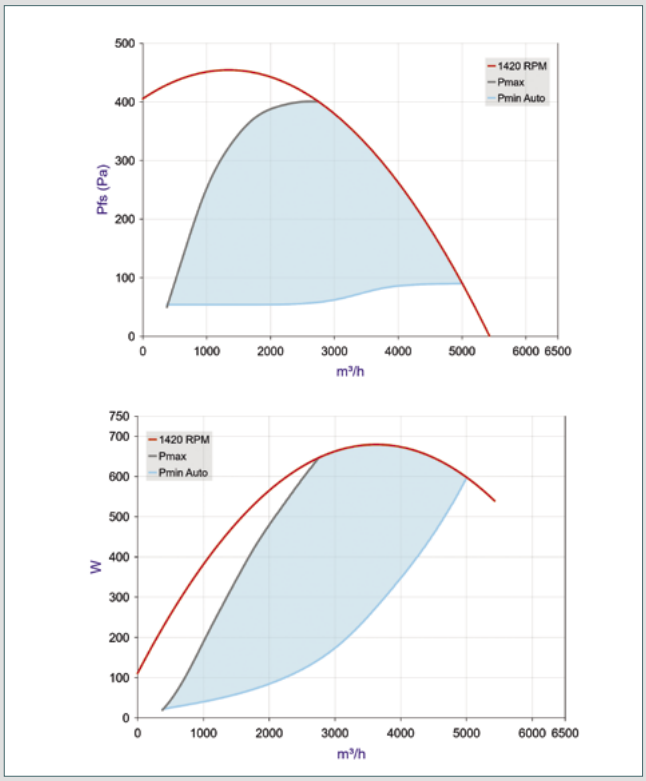

EasyVEC® micro-watt+ 4000

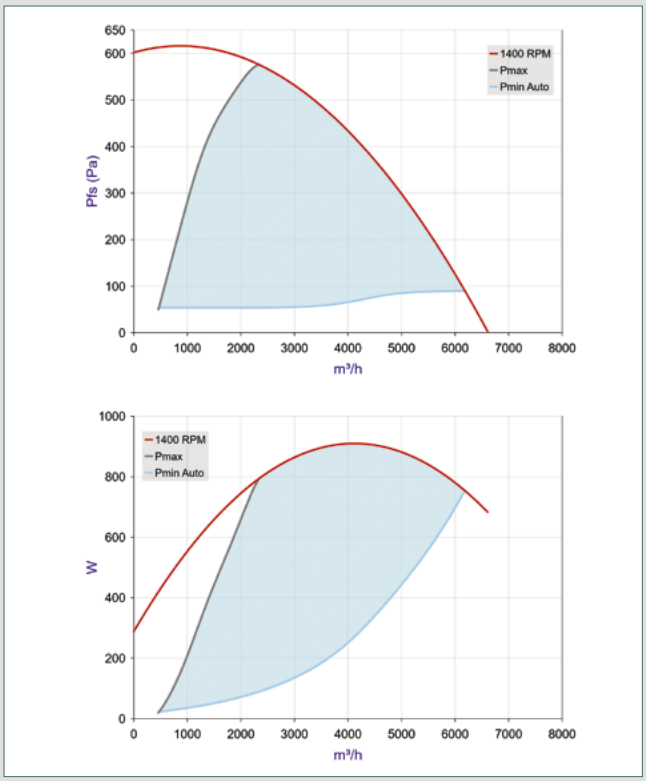

EasyVEC® micro-watt+ 5000

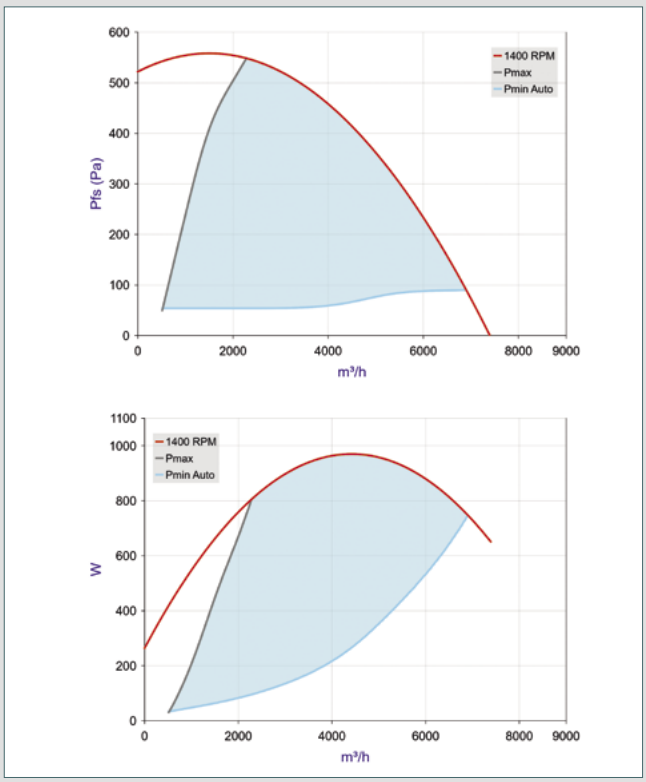

EasyVEC® micro-watt+ 6500

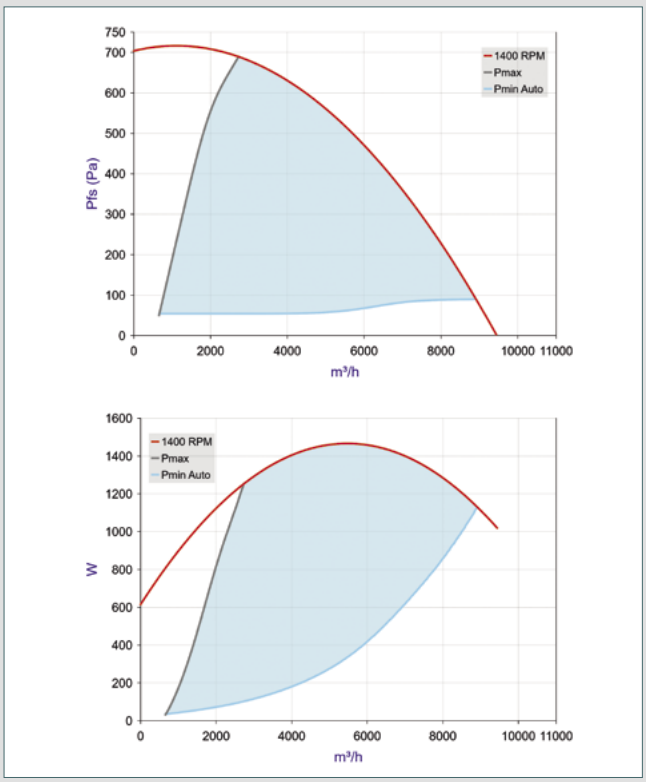

EasyVEC® micro-watt+ 8000

- Aeraulic curves drawn up as per standard NF EN ISO 5801.
- P (Pa) = static pressure.
- P (W) = power consumption.

CMEV box fans

Very low consumption

EasyVEC® micro-watt+

AERAULIC CHARACTERISTICS

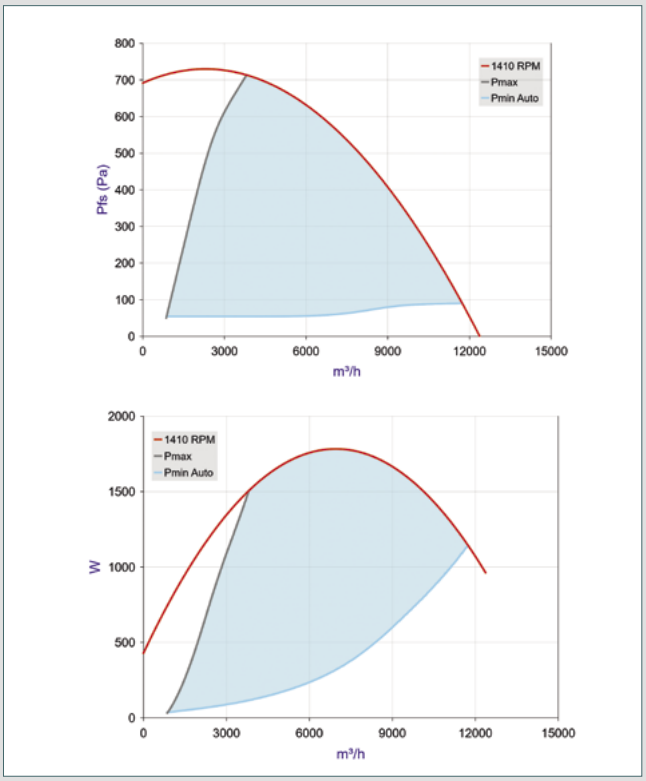

EasyVEC® micro-watt+ 10000

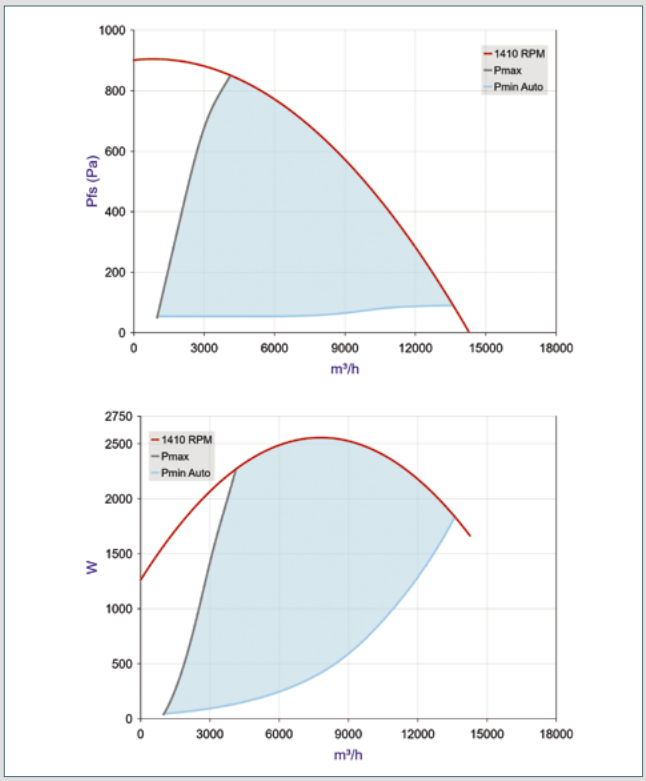

EasyVEC® micro-watt+ 12000

- Aeraulic curves drawn up as per standard NF EN ISO 5801.
- P (Pa) = static pressure.
- P (W) = power consumption.

CMEV box fans

Low consumption

EasyVEC® micro-watt

EasyVEC® Airflow ≥ 4,000 m³/h
long casing with filter

EasyVEC® Airflow ≥ 4,000 m³/h
short casing with filter

PRODUCT ADVANTAGES

- *Easy to select: Selector poWair software program.*
- *Easy to install: modular branch connections on site.*
- *Easy to configure: remote control.*
- *Easy to service: single access panel, link to documentation via QR code.*

COMPLIANCE

- *Technical Approval for Modulated Ventilation.*
- *ESC-eligible: BAT-TH-125.*

RANGE

Description	Airflow (m³/h)	Reference	Discount family
With choice of options*			
EasyVEC® micro-watt 4000 proximity switch	4,000	11034588	***13***
EasyVEC® micro-watt 5000 proximity switch	5,000	11034589	***13***
EasyVEC® micro-watt 6500 proximity switch	6,500	11034590	***13***
EasyVEC® micro-watt 8000 proximity switch	8,000	11034591	***13***
EasyVEC® micro-watt 10000 proximity switch	10,000	11034592	***13***
EasyVEC® micro-watt 12000 proximity switch	12,000	11034593	***13***

*Price with no options. Please refer to the Accessories page for option prices.

DESCRIPTION

- EC motor with very low power consumption (50/60 Hz),
- Simple and intuitive remote control always within reach due to its attachment cable and magnetic holder,
- 2 control modes possible: constant pressure to minimise consumption or via 0-10 V external probe,
- Alarm available by wiring to the electronic board,
- Modbus RS, Bacnet IP and AldesConnect® Pro option.

ELECTRICAL CHARACTERISTICS

- Single-phase EC motor up to model 12000.

Model	I max (A)	P max absorbed (W)
EasyVEC® micro-watt 4000	5.0	700
EasyVEC® micro-watt 5000	8.0	1,200
EasyVEC® micro-watt 6500	8.3	1,250
EasyVEC® micro-watt 8000	12.0	1,850
EasyVEC® micro-watt 10000	15.7	2,200
EasyVEC® micro-watt 12000	20.5	3,200

CMEV box fans

Low consumption

EasyVEC® micro-watt

AERAULIC CHARACTERISTICS

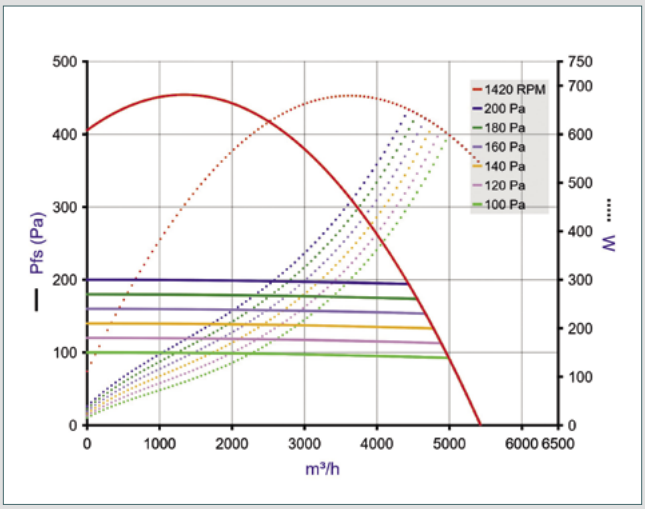

EasyVEC® micro-watt 4000

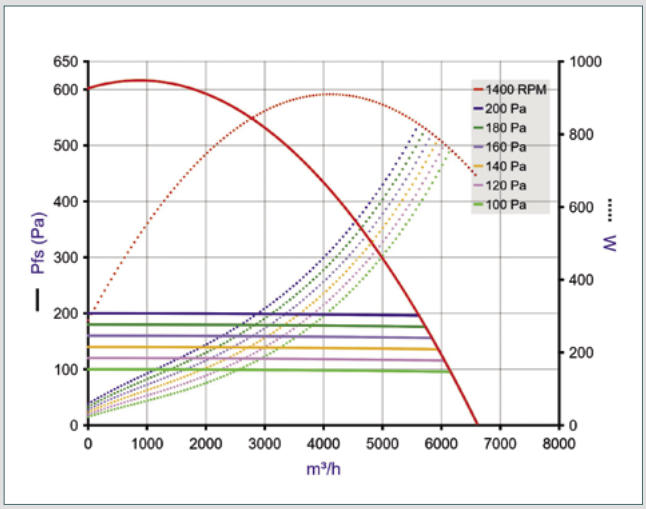

EasyVEC® micro-watt 5000

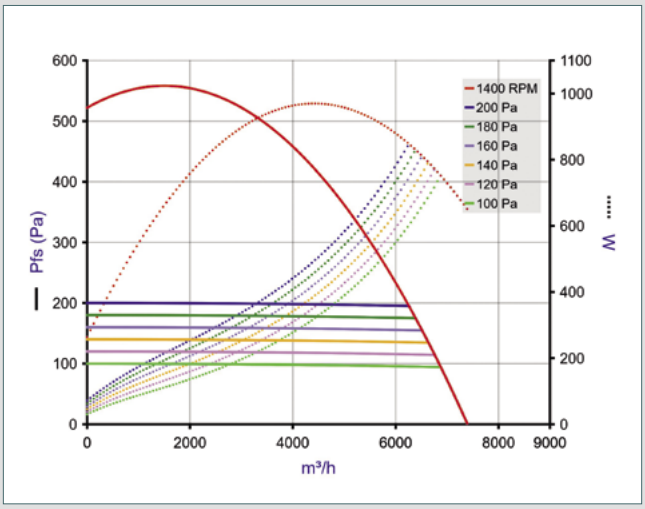

EasyVEC® micro-watt 6500

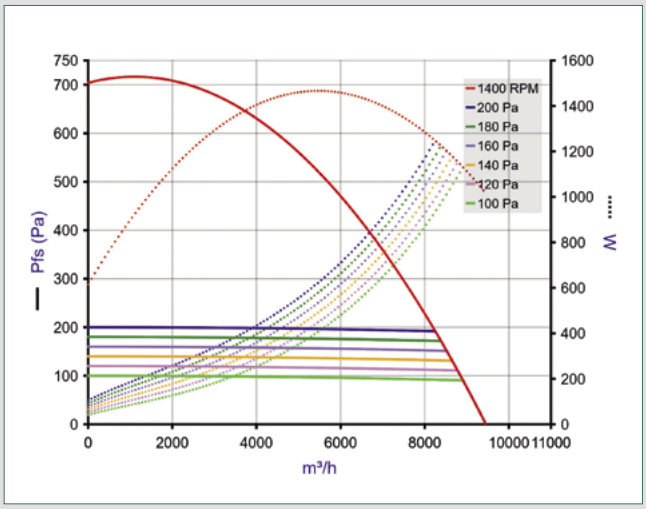

EasyVEC® micro-watt 8000

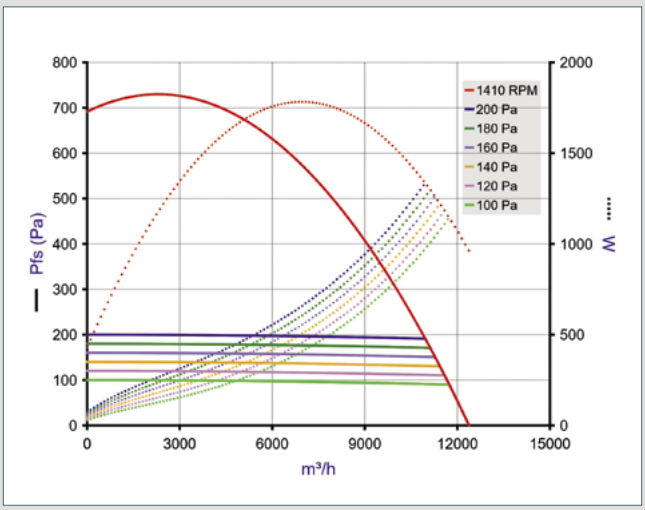

EasyVEC® micro-watt 10000

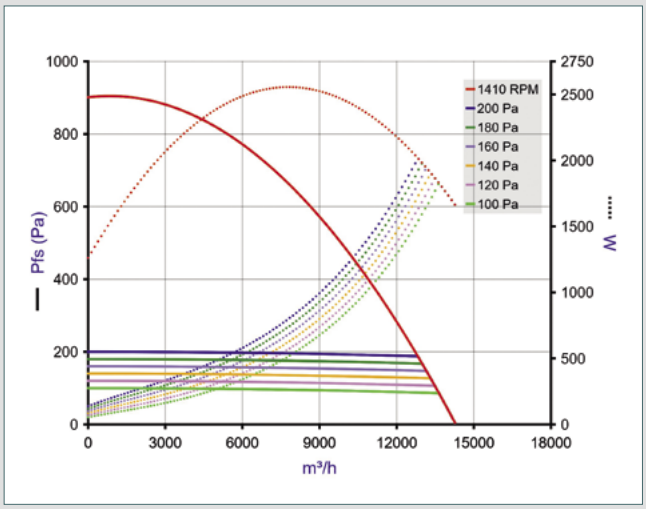

EasyVEC® micro-watt 12000

- Aeraulic curves drawn up as per standard NF EN ISO 5801.
- P (Pa) = static pressure.
- P (W) = power consumption.

CMEV box fans

Standard

EasyVEC® standard

EasyVEC® Airflow ≥ 4,000 m³/h
long casing with filter

EasyVEC® Airflow ≥ 4,000 m³/h
short casing with filter

PRODUCT ADVANTAGES

- *Easy to select: Selector poWair software program.*
- *Easy to install: modular branch connections on site.*
- *Easy to service: single access panel, link to documentation via QR code.*

COMPLIANCE

- *Technical Approval for Modulated Ventilation.*
- *ESC-eligible: BAT-TH-125 and BAT-TH-112 (if speed controller).*
- *ErP[1].*

RANGE

Description	Airflow (m³/h)	Reference	Discount family
With choice of options*			
EasyVEC® Standard 4000 proximity switch	4,000	11034508	***13***
EasyVEC® Standard 5000 proximity switch	5,000	11034509	***13***
EasyVEC® Standard 6500 proximity switch	6,500	11034510	***13***
EasyVEC® Standard 8000 proximity switch	8,000	11034511	***13***
EasyVEC® Standard 10000 proximity switch	10,000	11034512	***13***
EasyVEC® Standard 12000 proximity switch	12,000	11034513	***13***

*Price with no options. Please refer to the Accessories page for option prices.

DESCRIPTION

- Speed control optional to adjust to power as needed,
- AC motor,
- Option for use in air supply and smoke and heat exhaust.

ELECTRICAL CHARACTERISTICS

- AC motor.

Model without speed controller (three-phase power supply 380 V)

Model	Max. absorbed current (A)	Max. power (W)
EasyVEC® standard 4000	1.27	550
EasyVEC® standard 5000	1.72	945
EasyVEC® standard 6500	2.4	1,100
EasyVEC® standard 8000	3.26	1,200
EasyVEC® standard 10000	4.64	2,200
EasyVEC® standard 12000	6.17	3,000

Model with single-phase speed controller (single-phase power supply)

Model	Max. absorbed current (A)	Max. power (W)
EasyVEC® standard 4000	5.2	720
EasyVEC® standard 5000	7.1	110
EasyVEC® standard 6500	8.2	1,255
EasyVEC® standard 8000	11	1,750
EasyVEC® standard 10000	13.2	2,050
EasyVEC® standard 12000	21.8	3,200

(1) Compliant with Eco-design Regulation 1253/2014.

EasyVEC® standard

THE CURVES FOR MODELS > 4,000 M³/H CORRESPOND TO BOX FANS WITH SPEED CONTROLLER TO MEET ErP REQUIREMENTS

AERAULIC CHARACTERISTICS

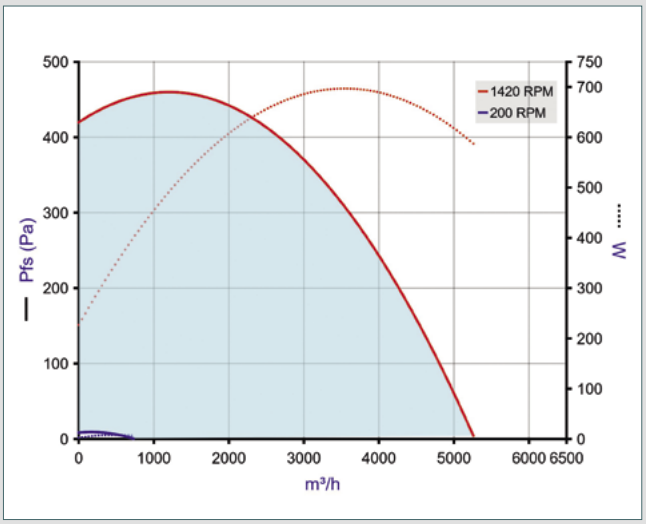

EasyVEC® standard 4000

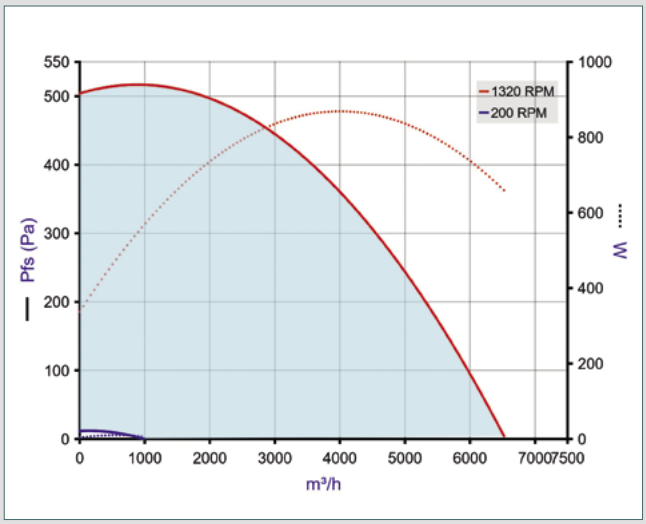

EasyVEC® standard 5000

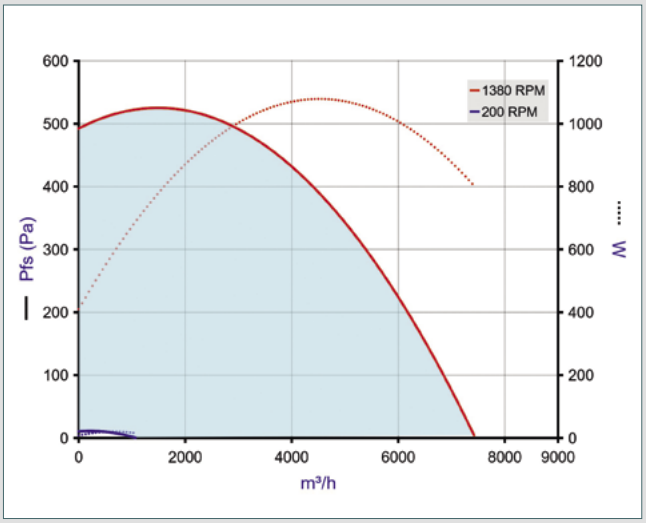

EasyVEC® standard 6500

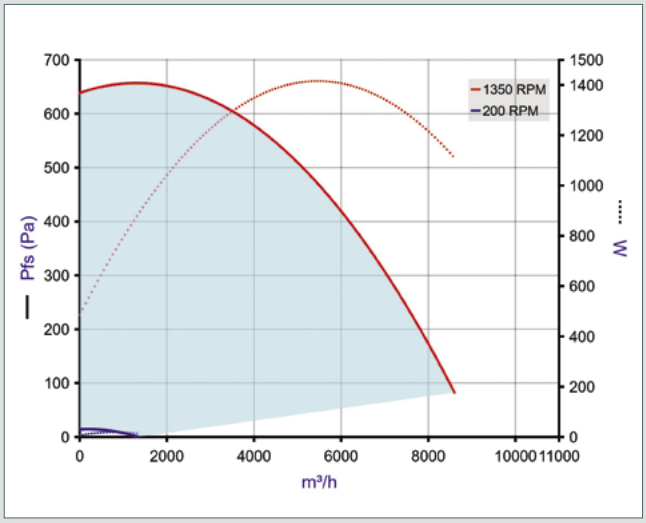

EasyVEC® standard 8000

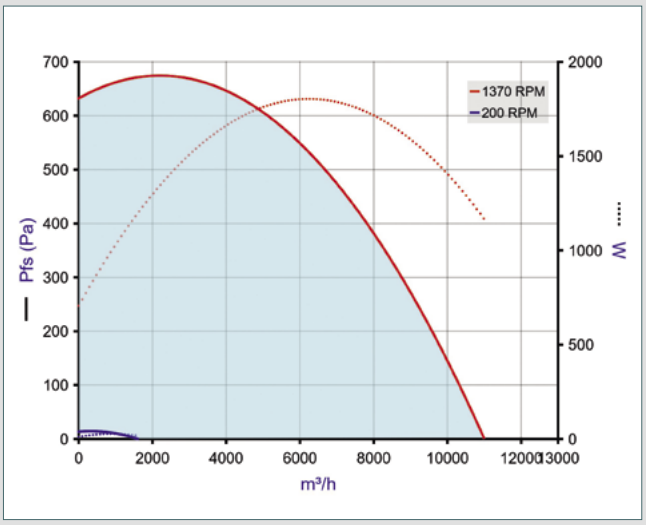

EasyVEC® standard 10000

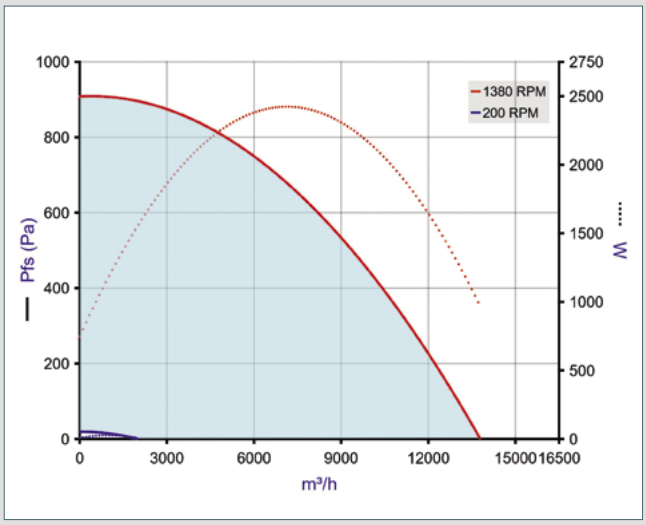

EasyVEC® standard 12000

- Aeraulic curves drawn up as per standard NF EN ISO 5801.
- P (Pa) = static pressure.
- P (W) = power consumption.

CMEV box fans

EasyVEC® Commercial

EasyVEC® accessories

ACCESSORIES - BOX FANS CROSS-REFERENCING

Models	Branch connection Ø
4000	500 mm
5000	630 mm
6500	630 mm
8000	630 mm
10000	710 mm
12000	710 mm

ELECTRICAL ACCESSORIES

Description	Reference	Discount family
Circuit breaker 1.0 to 1.6 A	11056184	*07*
Circuit breaker 1.6 to 2.5 A	11057052	*07*
Circuit breaker 2.5 to 4 A	11057053	*07*
Circuit breaker 4 to 6.3 A	11057054	*07*
Circuit breaker 6.3 to 10 A	11057055	*07*
Circuit breaker 11 to 16 A	11057056	*07*
Circuit breaker 20 to 25 A	11057057	*07*
Air supply - Smoke and heat exhaust		
AXONE 1 SPEED/DES-3-PH. 4.7 A+IPDP 20-300 PA	11090646	*08*
AXONE 1 SPEED/DES-3-PH. 16.7 A+IPDP 20-300 PA	11090647	*08*

SYSTEM ACCESSORIES

Description	Reference	Discount family
Flexible air intake sleeve*		
MS Pro M0 Ø 500 mm	11094301	*12*
MS Pro M0 Ø 630 mm	11094662	*13*
MS Pro M0 Ø 710 mm	11094663	*13*
Flexible discharge sleeve		
REF MS kit. M0 Ø 500 mm	11025068	*13*
REF MS kit. M0 Ø 630 mm	11025077	*13*
REF MS kit. M0 Ø 710 mm	11025080	*13*
Flexible discharge sleeve kit + branch connection		
MS REF.M0 kit + EasyVEC branch connection T6 Ø 500 mm	11025070	*13*
MS REF.M0 kit + EasyVEC branch connection T7 Ø 630 mm	11025071	*13*
MS REF.M0 kit + EasyVEC branch connection T8 Ø 710 mm	11025079	*13*
Screened rain hood		
Female screened rain hood + grille Ø 500 mm	11056374	*06*
Female screened rain hood + grille Ø 630 mm	11056375	*06*
Female screened rain hood + grille Ø 710 mm	11056410	*09*
Pressure switch kit		
Pressure switch timer (recommended in case of wind gusts)	11025012	*07*
Adjustable pressure switch 20-300 Pa	11056440	*07*
EasyVEC® filter clogging detection kit	11056000	*13*
Sound attenuators - OCTA with baffle		
OCTA with baffle 500 + seal	11094995	*22*
OCTA with baffle 630 + seal	11094997	*22*
Sound attenuators - OCTA		
OCTA 500 sealed	11094640	*22*
OCTA 630 sealed	11094641	*22*
OCTA 710 sealed	11094647	*22*
Anti-vibration mountings		
Anti-vibration mountings (pack of 4): Shore 45/4 kg per mounting	11034385	*06*
Pack of 4 elastomer mountings	11094562	*22*

Description	Reference	Discount family
Double-skin insulation 25 mm kit on site		
EasyVEC® 4000 insulation kit	11034490	*13*
EasyVEC® 5000/6500/8000 insulation kit	11034491	*13*
EasyVEC® 10000/12000 insulation kit	11034492	*13*
EasyVEC® 4000 insulation kit for casing with filters	11034524	*13*
EasyVEC® 5000/6500/8000 insulation kit for casing with filters	11034525	*13*
EasyVEC® 10000/12000 insulation kit for casing with filters	11034526	*13*
Filters ISO coarse 60% (G4)		
EasyVEC® 4000 filter ISO Coarse 60% (G4)	11034409	*13*
EasyVEC® 5000/6500/8000 filter ISO Coarse 60% (G4)	11034410	*13*
EasyVEC® 10000/12000 filter ISO Coarse 60% (G4)	11034411	*13*
Filter ISO ePM10 50% (M5)		
EasyVEC® 4000 filter ISO ePM10 50% (M5)	11034412	*13*
EasyVEC® 5000/6500/8000 filter ISO ePM10 50% (M5)	11034413	*13*
EasyVEC® 10000/12000 filter ISO ePM10 50% (M5)	11034414	*13*
Filter ISO ePM1 50-75% (F7)		
EasyVEC® 4000 filter ISO ePM1 50-75% (F7)	11034415	*13*
EasyVEC® 5000/6500/8000 filter ISO ePM1 50-75% (F7)	11034416	*13*
EasyVEC® 10000/12000 filter ISO ePM1 50-75% (F7)	11034425	*13*
Filter ISO ePM1 85% (F9)		
EasyVEC® 4000 filter ISO ePM1 85% (F9)	11034426	*13*
EasyVEC® 5000/6500/8000 filter ISO ePM1 85% (F9)	11034427	*13*
EasyVEC® 10000/12000 filter ISO ePM1 85% (F9)	11034428	*13*
Other accessories		
CO_2 sensor 0-10 V	11017090	*12*

* From January 2021

EasyVEC® accessories

SYSTEM ACCESSORIES

Description	Reference	Discount family
Constant pressure air supply kit	11056001	***13***

OPTIONS

Description	Code
ADJUSTABLE PRESSURE SWITCH	adjustable
INSULATION 4000/5000	ISOLA
INSULATION 6500 to 12000	ISOLA
Speed controller	
Speed controller 4000 to 5000 standard	VARI5
Speed controller 6500 to 8000 standard	VARI5
Speed controller 10000 to 12000 standard	VARI5
Left access panel	
Left access panel 4000 to 12000	FACCES3
Extended box fan with 2 filter rails	
Extended casing with 2 filter rails 4000 to 12000	RAILS
BMS connection	
Bacnet IP	BACNET
Modbus RS 485	MODBUS
AldesConnect® Pro	CONNECT
Filter clogging kit	
Filter clogging kit 4000 to 12000	INDIC
Circular branch connection	
Circular branch connection 4000	CIRC
Circular branch connection 5000 to 8000	CIRC
Circular branch connection 10000 to 12000	CIRC
Smoke and heat exhaust (specific proximity switch included)	
Adjustable pressure switch	DP
All-in-one speed (safety box + proximity switch + negative pressure switch)	TT_EN_UN

Other fans

Horizontal discharge roof fans

TAHA micro-watt

PRODUCT ADVANTAGES

- *Airflow from 650 to 16,000 m³/h.*
- *Constant pressure control kit (optional).*
- *Sleek design.*
- *Wide range of mounting accessories.*
- *ErP compliant with speed controller or control kit.*

RANGE

Designation	Reference	Discount family
SINGLE-PHASE		
TAHA microwatt M 220	11024125	***13***
TAHA microwatt M 280	11024127	***13***
TAHA microwatt M 450	11024130	***13***
THREE-PHASE		
TAHA microwatt T 500	11024131	***13***
TAHA microwatt T 560	11024132	***13***
TAHA microwatt T 630	11024133	***13***

DESCRIPTION

- 6 sizes, from 600 to 16,000 m³/h.
- Horizontal jet.
- Low-consumption EC motor.
- Temperature control built into the motor.
- Direct 0-10 V control possible via speed controller.
- Regulation kit by constant pressure as option with two possible values (day/night).
- Aluminium casing to ensure good resistance to corrosion.
- Bird protection screen.
- Backward curve centrifuge impeller.

FIELD OF APPLICATION

- Exhaust roof fan for CMEV in collective housing and commercial premises.

INSTALLATION

- Horizontal.
- Flat or sloped roof with masonry stack base or accessory.

ACCESSORIES

Designation	Reference	Discount family
Pressure tube kit (2 m)	11024466	***13***
Constant pressure control kit	11024467	***13***
Speed controller (0-10 V for EC motor)	11024468	***13***

Designation	Reference	Discount family
Constant pressure control kit	11024467	***13***

- Controls TAVA/TAHA micro-watt roof fans at constant pressure (power supply 220 V and output 0-10 V to be wired at EC motor control inlet).
- Two possible pressure settings: daytime and night time with dry contact switching.
- Pressure values adjustable to between 10 and 990 Pa.
- 230V - 50/60 Hz power supply.
- IP55 protection rating.

(see p.110)

DIMENSIONS (mm) – WEIGHT (kg)

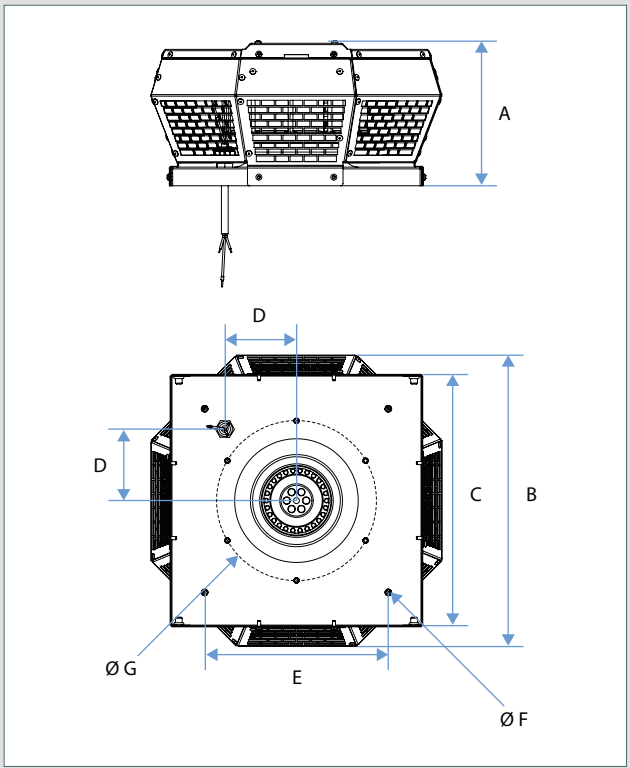

Type TAHA micro-watt	A (mm)	B (mm)	C (mm)	D (mm)	E (mm)	F (mm)	G (mm)	Weight (kg)
220	190	388	337	95	245	4 x Ø9	Ø213 6xM6	5.1
280	249	541	437	135	330	4 x Ø9	Ø286 M6x15 (6x)	8
450	418	860	670	222.5	535	4 x Ø11	Ø438 M6x15 (6x)	21.5
500	418	860	670	222.5	535	4 x Ø11	Ø438 M6x15 (6x)	37
560	521	1165	931	300	750	4 x Ø11	Ø605 M8x15	51
630	521.3	1165	931	307	750	4 x Ø11	Ø604 M8x20 (8x)	67

ELECTRICAL CHARACTERISTICS

- Asynchronous motor IP 54 (except TAHA micro-watt 280 - IP 33).

Type TAHA micro-watt	Number of poles	Max. power cons. SINGLE-PHASE 230 V (kW)	Max power cons. THREE-PHASE 400 V (kW)	Max cons. I SINGLE-PHASE 230 V (A)	Max cons. I THREE-PHASE 400 V (A)
TAHA 220 micro-watt	-	0.120		1.0	
TAHA 280 micro-watt	-	0.283		2.0	
TAHA 450 micro-watt	-	0.511		2.4	
TAHA 500 micro-watt	-		1.328		2.1
TAHA 560 micro-watt	-		2.334		3.6
TAHA 630 micro-watt	-		2.757		4.2

* Compliant with Eco-design Regulation 1253/2014

TAHA micro-watt

AERAULIC AND ACOUSTIC CHARACTERISTICS

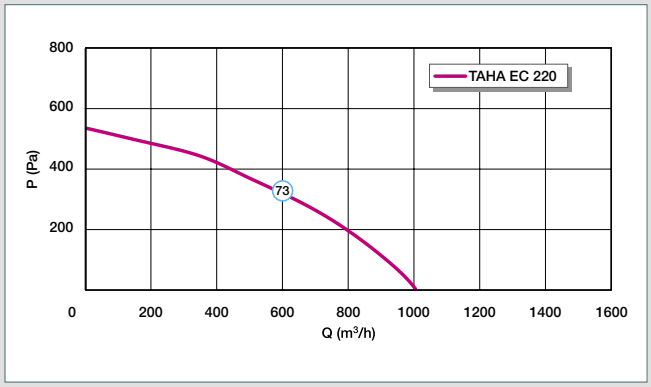

TAHA micro-watt 220

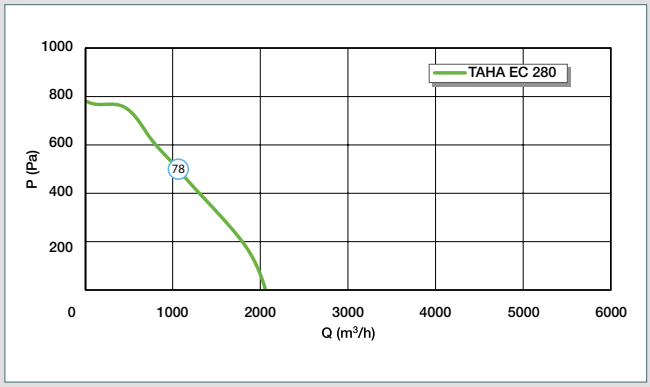

TAHA micro-watt 280

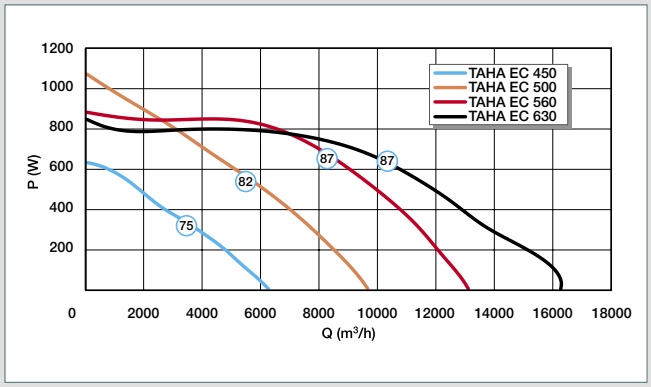

TAHA micro-watt 450, 500, 560, 630

- Aeraulic curves established as per standard NF EN ISO 5801.
- ○ sound pressure level in dB (A), measured at 4 m from the fan.
- P (Pa) = static pressure.

Other fans

Vertical discharge roof fans

TAVA micro-watt

PRODUCT ADVANTAGES

- *Airflow from 600 to 14,000 m³/h.*
- *Constant pressure control kit (optional).*
- *Sleek design.*
- *Wide range of mounting accessories.*
- *ErP compliant with speed controller or control kit.*

RANGE

Designation	Reference	Discount family
SINGLE-PHASE		
TAVA 190 M micro-watt	11024134	***13***
TAVA 220 M micro-watt	11024135	***13***
TAVA 250 M micro-watt	11024136	***13***
TAVA 280 M micro-watt	11024137	***13***
TAVA 355 M micro-watt	11024138	***13***
TAVA 400 M micro-watt	11024139	***13***
TAVA 450 M micro-watt	11024140	***13***
THREE-PHASE		
TAVA 500 T micro-watt	11024141	***13***
TAVA 560 T micro-watt	11024142	***13***
TAVA 630 T micro-watt	11024143	***13***

DESCRIPTION

- 10 sizes, from 600 to 14,000 m³/h.
- Vertical jet.
- Low-consumption EC motor.
- Temperature control built into the motor.
- Single-phase or three-phase power supply depending on size.
- Direct 0-10 V control possible via speed controller.
- Regulation kit by constant pressure as option with two possible values (day/night).
- Lockable proximity switch as standard.
- Aluminium casing to ensure good resistance to corrosion.
- Bird protection screen.
- Backward curve centrifuge impeller.

FIELD OF APPLICATION

- Exhaust roof fan for CMEV in collective housing and commercial premises.

INSTALLATION

- Vertical exhaust jet.
- Flat or sloped roof with masonry stack base or accessory.

ACCESSORIES

Designation	Reference	Discount family
Pressure tube kit (2 m)	11024466	***13***
Speed controller (0-10 V for EC motor)	11024468	***13***

Designation	Reference	Discount family
Constant pressure control kit	11024467	***13***

- Controls TAVA/TAHA micro-watt roof fans at constant pressure (power supply 220 V and output 0-10 V to be wired at EC motor control inlet).
- Two possible pressure settings: daytime and night time with dry contact switching.
- Pressure values adjustable to between 10 and 990 Pa.
- 230V - 50/60 Hz power supply.
- IP55 protection rating.

(see p.110)

DIMENSIONS (mm) – WEIGHT (kg)

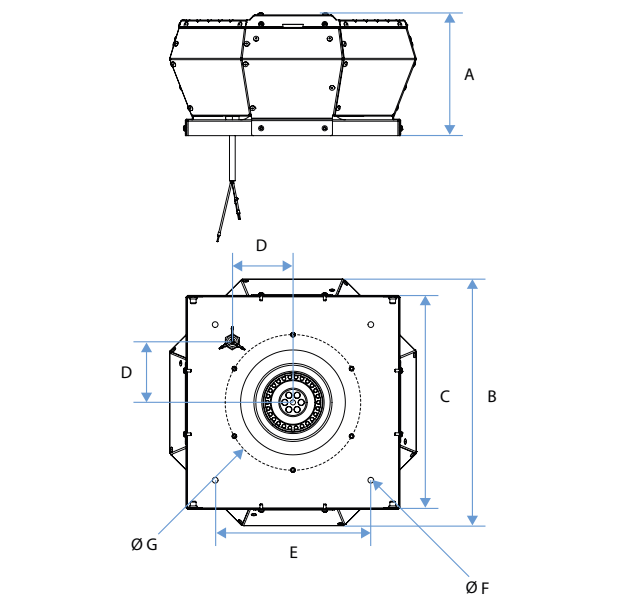

TAVA micro-watt	A (mm)	B (mm)	C (mm)	D (mm)	E (mm)	F (mm)	G (mm)	Weight (kg)
190	190	388	337	95	245	4 x Ø9	Ø213 6xM6	4.7
220	190	388	337	95	245	4 x Ø9	Ø213 6xM6	5.1
250	190	541	337	95	245	4 x Ø9	Ø286 M6x15 (6x)	6.5
280	249	541	437	135	330	4 x Ø9	Ø286 M6x15 (6x)	8
355	333	745	598	192.5	450	4 x Ø11	Ø438 M6x15 (6x)	15.4
400	333	745	598	192.5	450	4 x Ø11	Ø438 M6x15 (6x)	19.4
450	418	860	670	222.5	535	4 x Ø11	Ø438 M6x15 (6x)	21.5
500	418	860	670	222.5	535	4 x Ø11	Ø438 M6x15 (6x)	37
560	521	1165	931	300	750	4 x Ø11	Ø605 M8x15	51
630	521.3	1165	931	307	750	4 x Ø11	Ø604 M8x20 (8x)	67

ELECTRICAL CHARACTERISTICS

- Asynchronous motor IP 54 (except TAVA micro-watt 250 and 280 - IP 33).

TAVA micro-watt	Max. power cons. SINGLE-PHASE 230 V (kW)	Max power cons. THREE-PHASE 400 V (kW)	Max cons. I SINGLE-PHASE 230 V (A)	Max cons. I THREE-PHASE 400 V (A)
TAVA 190 micro-watt	0.099		0.8	
TAVA 220 micro-watt	0.113		0.9	
TAVA 250 micro-watt	0.179		1.5	
TAVA 280 micro-watt	0.268		1.9	
TAVA 355 micro-watt	0.165		1.4	
TAVA 400 micro-watt	0.503		2.3	
TAVA 450 micro-watt	0.509		2.3	
TAVA 500 micro-watt		1.331		2.1
TAVA 560 micro-watt		2.263		3.5
TAVA 630 micro-watt		2.627		4.0

*Compliant with Eco-design Regulation 1253/2014 with potentiometer or control kit

TAVA micro-watt

AERAULIC AND ACOUSTIC CHARACTERISTICS

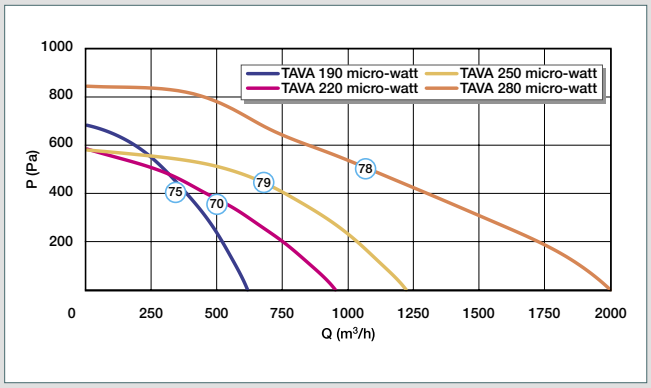

TAVA micro-watt 190, 220, 250, 280

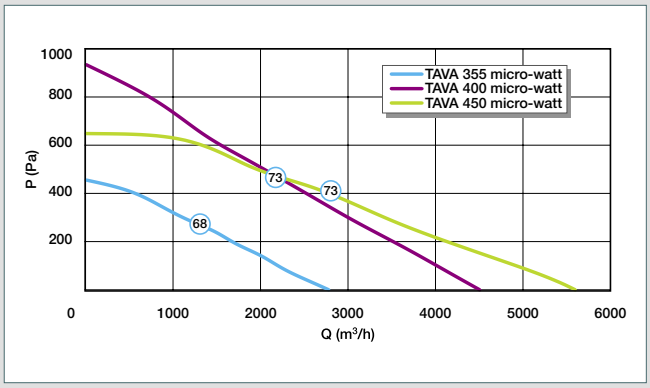

TAVA micro-watt 355, 400, 450

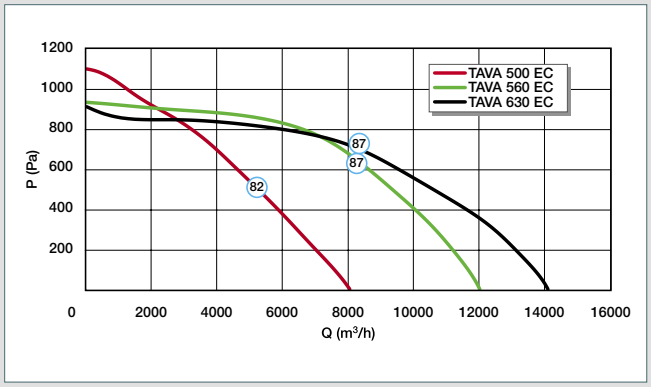

TAVA micro-watt 500, 560, 630

- Aeraulic curves established as per standard NF EN ISO 5801.
- ○ sound pressure level in dB (A), measured at 4 m from the fan.
- P (Pa) = static pressure.

Other fans

Horizontal discharge roof fans

TAHA

PRODUCT ADVANTAGES

- *Airflow from 500 to 12,000 m³/h.*
- *Sleek design.*
- *Wide range of mounting accessories.*
- *ErP compliant with speed controller.*

RANGE

Designation	Reference	Discount family
SINGLE-PHASE		
TAHA 190 M2	11024100	***13***
TAHA 220 M2	11024102	***13***
TAHA 315 M4	11024106	***13***
TAHA 355 M4	11024107	***13***
TAHA 400 M4	11024108	***13***
THREE-PHASE		
TAHA 450 T4	11024109	***13***
TAHA 500 T4	11024110	***13***
TAHA 560 T4	11024111	***13***

DESCRIPTION

- 8 sizes, from 500 to 12,000 m³/h.
- Horizontal jet.
- Aluminium casing to ensure good resistance to corrosion.
- Bird protection screen.
- Backward curve centrifuge impeller.

FIELD OF APPLICATION

- Roof-mounted exhaust fan for CMEV in collective housing and residential commercial premises.

INSTALLATION

- Horizontal exhaust jet.
- Flat or sloped roof with masonry stack base or accessory.

ACCESSORIES

Designation	Reference	Discount family
3-phase autotransformer		
3-phase 2A autotransformer	11086096	***07***
3-phase 4A autotransformer	11086097	***07***
3-phase 6A autotransformer	11086098	***07***
Thermal-magnetic circuit breaker		
Circuit breaker 1.6 - 2.5 A	11057052	***07***
Circuit breaker 2.5 - 4 A	11057053	***07***
Circuit breaker 4 - 6.3 A	11057054	***07***
Proximity switch		
One-speed single-phase proximity switch - 0.9 kW	11056196	***07***
One-speed three-phase proximity switch 7.5 kW + contacts	11057606	***07***
Single-phase voltage controller		
Single-phase voltage controller 1.5 A	11086572	***07***
Single-phase voltage controller 3.0 A	11086024	***07***

DIMENSIONS (mm) – WEIGHT (kg)

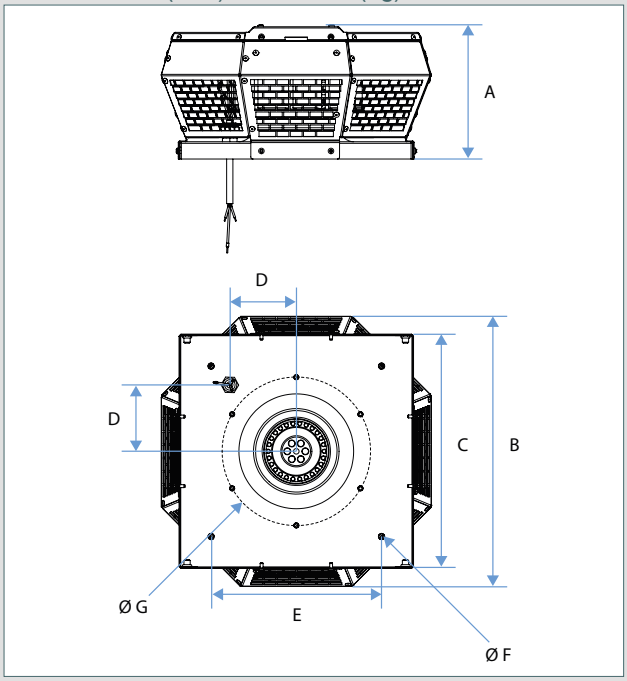

Type TAHA	A (mm)	B (mm)	C (mm)	D (mm)	E (mm)	F (mm)	G (mm)	Weight (kg)
190	190	388	337	95	245	4 x Ø9	Ø213 6xM6	4.5
220	190	388	337	95	245	4 x Ø9	Ø213 6xM6	4.9
315	249	541	437	135	330	4 x Ø9	Ø286 M6x15 (6x)	7.8
355	333	745	598	192.5	450	4 x Ø11	Ø438 M6x15 (6x)	16.5
400	333	745	598	192.5	450	4 x Ø11	Ø438 M6x15 (6x)	19.5
450	418	860	670	222.5	535	4 x Ø11	Ø438 M6x15 (6x)	29.7
500	418	860	670	222.5	535	4 x Ø11	Ø438 M6x15 (6x)	42
560	521	1165	931	300	750	4 x Ø11	Ø605 M8x15	51

ELECTRICAL CHARACTERISTICS

- Asynchronous motor IP 54 (except TAVA 355 - IP 44 and TAVA 190/220/315 - IP 33).

Type TAHA	Number of poles	Max. power cons. SINGLE-PHASE 230 V (kW)	Max power cons. THREE-PHASE 400 V (kW)	Max cons. I SINGLE-PHASE 230 V (A)	Max cons. I THREE-PHASE 400 V (A)
TAHA 190	2	0.05		0.3	
TAHA 220	2	0.110		0.6	
TAHA 315	4	0.115		0.6	
TAHA 355	4	0.255		1.3	
TAHA 400	4	0.456		2.7	
TAHA 450	4		0.690		1.5
TAHA 500	4		1.507		3.5
TAHA 560	4		1.958		4.8

* Compliant with Eco-design Regulation 1253/2014 with speed controller

TAHA

AERAULIC AND ACOUSTIC CHARACTERISTICS

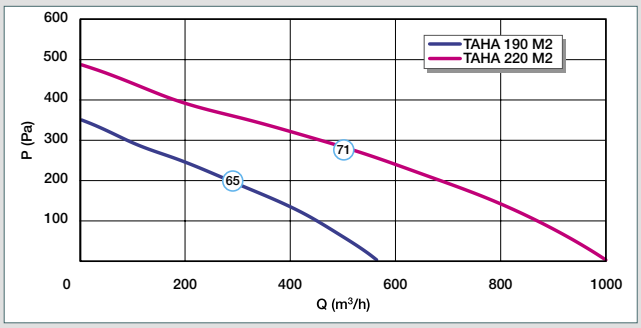

TAHA 190, 220

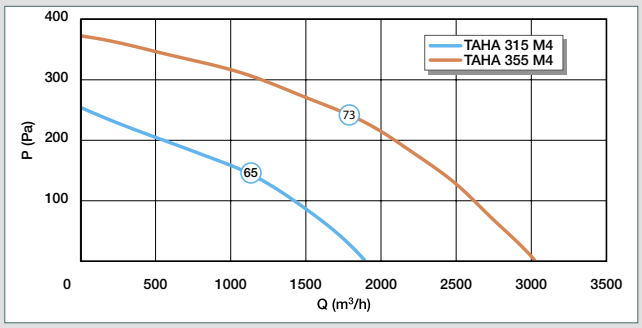

TAHA 315, 355

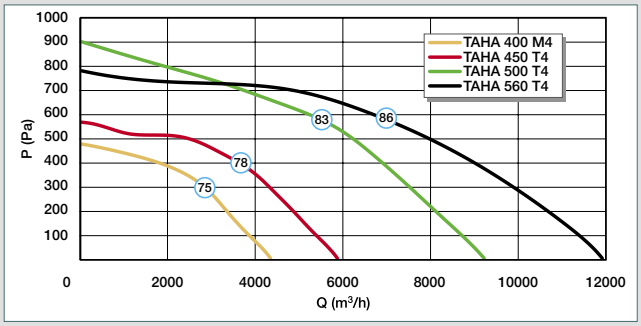

TAHA 400, 450, 500, 560

- Aeraulic curves established as per standard NF EN ISO 5801.
- ○ sound pressure level in dB (A), measured at 4 m from the fan.
- P (Pa) = static pressure.

Other fans

Vertical discharge roof fans

TAVA

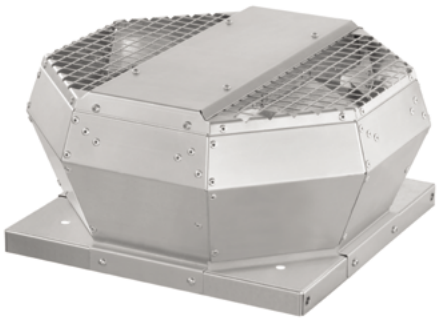

PRODUCT ADVANTAGES

- *Airflow from 500 to 11,000 m³/h.*
- *Sleek design.*
- *Wide range of mounting accessories.*
- *ErP compliant with speed controller.*

RANGE

Designation	Reference	Discount family
SINGLE-PHASE		
TAVA 190 M2	11024112	***13***
TAVA 220 M2	11024114	***13***
TAVA 250 M4	11024116	***13***
TAVA 280 M4	11024117	***13***
TAVA 315 M4	11024118	***13***
TAVA 355 M4	11024119	***13***
TAVA 400 M4	11024120	***13***
THREE-PHASE		
TAVA 450 T4	11024121	***13***
TAVA 500 T4	11024122	***13***
TAVA 560 T4	11024123	***13***

DESCRIPTION

- 10 sizes, from 500 to 11,000 m³/h.
- Vertical jet.
- Aluminium casing to ensure good resistance to corrosion.
- Bird protection screen.
- Backward curve centrifuge impeller.

FIELD OF APPLICATION

- Roof-mounted exhaust fan for CMEV in collective housing and residential commercial premises.

INSTALLATION

- Vertical exhaust jet.
- Flat or sloped roof with masonry stack base or accessory.

ACCESSORIES

Designation	Reference	Discount family
3-phase autotransformer		
3-phase 2A autotransformer	11086096	***07***
3-phase 4A autotransformer	11086097	***07***
3-phase 6A autotransformer	11086098	***07***
Thermal-magnetic circuit breaker		
Circuit breaker 1.6 - 2.5 A	11057052	***07***
Circuit breaker 2.5 - 4 A	11057053	***07***
Circuit breaker 4 - 6.3 A	11057054	***07***
Proximity switch		
One-speed single-phase proximity switch - 0.9 kW	11056196	***07***
One-speed three-phase proximity switch 7.5 kW + contacts	11057606	***07***
Single-phase voltage controller		
Single-phase voltage controller 1.5 A	11086572	***07***
Single-phase voltage controller 3.0 A	11086024	***07***

DIMENSIONS (mm) – WEIGHT (kg)

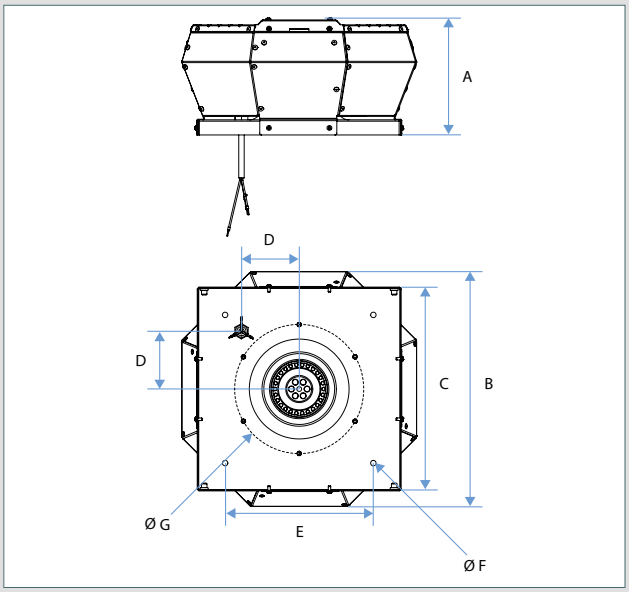

Type TAHA	A (mm)	B (mm)	C (mm)	D (mm)	E (mm)	F (mm)	G (mm)	Weight (kg)
190	190	388	337	95	245	4xØ9	Ø213 6xM6	4.5
220	190	388	337	95	245	4xØ9	Ø213 6xM6	5.0
250	190	388	337	95	245	4xØ9	Ø213 M6x15 (6x)	5.6
280	249	541	437	135	330	4xØ9	Ø286 M6x15 (6x)	8.2
315	249	541	437	135	330	4xØ9	Ø286 M6x15 (6x)	8.3
355	333	745	598	192.5	450	4xØ11	Ø438 M6x15 (6x)	16.5
400	333	745	598	192.5	450	4xØ11	Ø438 M6x15 (6x)	19.5
450	418	860	670	222.5	535	4xØ11	Ø438 M6x15 (6x)	26
500	418	860	670	222.5	535	4xØ11	Ø438 M6x15 (6x)	34
560	521	1165	931	300	750	4xØ11	Ø605 M8x15	53.5

ELECTRICAL CHARACTERISTICS

- Asynchronous motor IP 54 (except TAVA 355 - IP 44 and TAVA 190/220/315 - IP 33).

Type TAVA	Number of poles	Max. power cons. SINGLE-PHASE 230 V (kW)	Max power cons. THREE-PHASE 400 V (kW)	Max cons. I SINGLE-PHASE 230 V (A)	Max cons. I THREE-PHASE 400 V (A)
TAVA 190	2	0.05		0.3	
TAVA 220	2	0.110		0.6	
TAVA 250	4	0.052		0.3	
TAVA 280	4	0.082		0.4	
TAVA 315	4	0.114		0.6	
TAVA 355	4	0.249		1.3	
TAVA 400	4	0.452		2.6	
TAVA 450	4		0.641		1.5
TAVA 500	4		1.467		3.4
TAVA 560	4		1.911		4.8

*Compliant with Eco-design Regulation 1253/2014 with speed controller

TAVA

AERAULIC AND ACOUSTIC CHARACTERISTICS

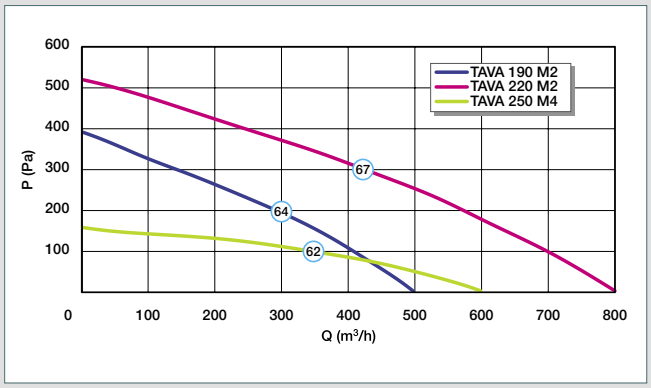

TAVA 190, 220, 250

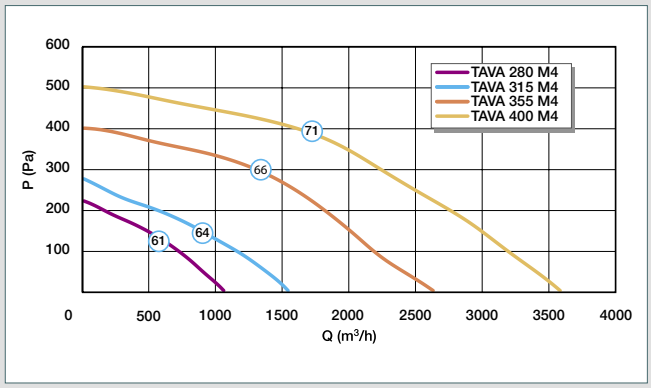

TAVA 280, 315, 355, 400

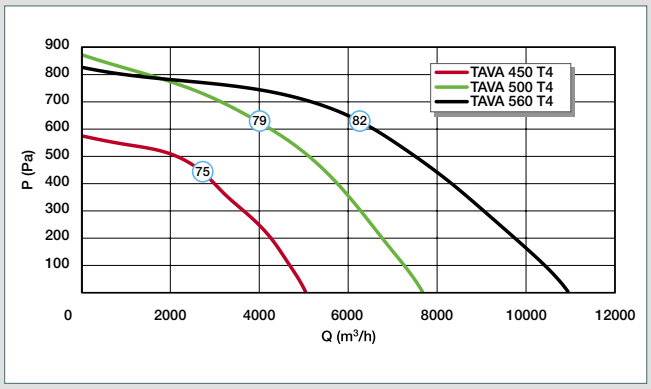

TAVA 450, 500, 560

- Aeraulic curves established as per standard NF EN ISO 5801.
- ○ sound pressure level in dB (A), measured at 4 m from the fan.
- P (Pa) = static pressure.

Compatibility of accessories

Dimensions of TAVA, TAHA, TAVA micro-watt, TAHA micro-watt	Insulated stack base	Insulated stack base with silencer	Connection flange	Flexible sleeve	Non-return damper	Rectangular/circular plate
190	11024440	11024446	11024452	11024457	11024462	11024470
220	11024440	11024446	11024452	11024457	11024462	11024470
250	11024440	11024446	11024452	11024457	11024462	11024470
280	11024441	11024447	11024453	11024458	11024463	11024471
315	11024441	11024447	11024453	11024458	11024463	11024471
355	11024442	11024448	11024454	11024459	11024464	11024472
400	11024442	11024448	11024454	11024459	11024464	11024472
450	11024443	11024449	11024454	11024459	11024464	11024473
500	11024443	11024449	11024454	11024459	11024464	11024473
560	11024444	11024450	11024455	11024460	11024465	11024474
630	11024444	11024450	11024455	11024460	11024465	11024474

This information is included in the TAHA and TAVA technical documentation that can be found on our site pro.aldes.fr. You will also find mounting possibilities.

Other fans

TAHA/TAVA roof fan accessories

Insulated flat roof stack base

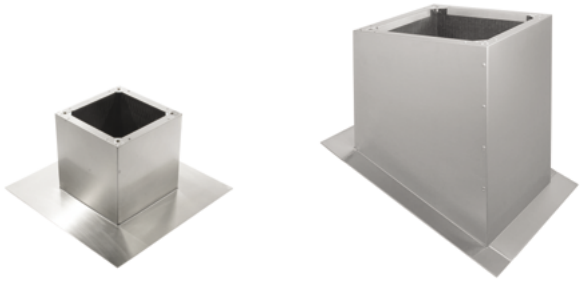

PRODUCT ADVANTAGES

- *Very corrosion-resistant.*
- *Thermal and acoustic insulation.*

RANGE

Designation	Reference	Discount family
FOR FLAT ROOF		
220	11024440	***13***
280	11024441	***13***
355	11024442	***13***
400	11024443	***13***
560	11024444	***13***
FOR SLOPING ROOF		
220	11024250	***13***
280	11024251	***13***
355	11024252	***13***
450	11024253	***13***
560	11024254	***13***

DESCRIPTION

- Aluminium casing.
- 30 mm insulation on internal walls to reduce noise and condensation.
- Sloping version available from 3° to 24° in 3° increments.

INSTALLATION

- Flat or sloping roof with no masonry stack base.

DIMENSIONS (mm) – WEIGHT (kg)

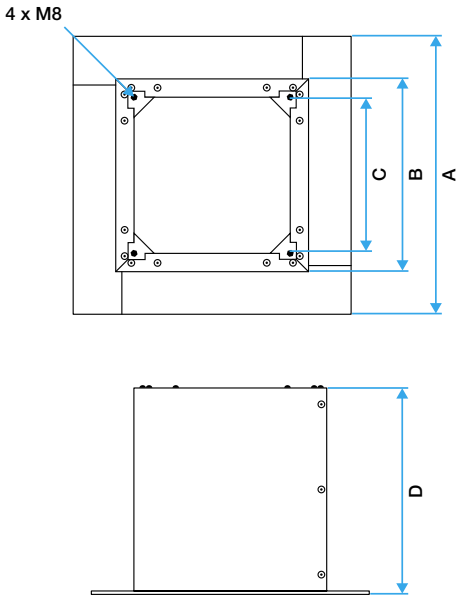

Reference	Stack base model	A	B	C	D	Weight
11024440	220	430	300	245	320	2.9
11024441	280	526	396	330	320	3.9
11024442	355	685	555	450	320	5
11024443	450	744	614	535	320	NC
11024444	560	1026	896	750	320	9

Insulated flat roof stack base with silencer

PRODUCT ADVANTAGES

- *Reduces sound pollution.*
- *Very corrosion-resistant.*

RANGE

Designation	Reference	Discount family
FOR FLAT ROOF		
220	11024446	***13***
280	11024447	***13***
355	11024448	***13***
450	11024449	***13***
560	11024450	***13***
FOR SLOPING ROOF		
220	11024255	***13***
280	11024256	***13***
355	11024257	***13***
450	11024258	***13***
560	11024259	***13***

DESCRIPTION

- Aluminium casing.
- 30 mm insulation on internal walls to reduce noise and condensation.
- Sound attenuator with baffles.
- Sloping roof version available from 3° to 24° in 3° increments.

INSTALLATION

- Flat or sloping roof with no masonry stack base.

DIMENSIONS (mm) – WEIGHT (kg)

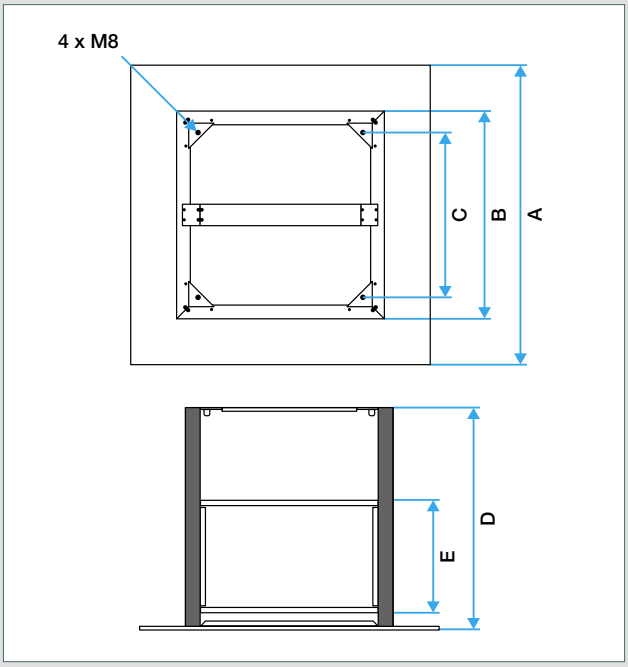

Reference	Stack base model	A	B	C	D	E	Weight
11024446	220	430	300	245	620	410	6.9
11024447	280	526	396	330	620	381	9
11024448	355	685	555	450	620	312	12.0
11024449	450	744	614	535	620	323	13.0
11024450	560	1026	896	750	620	314	19.0

Other fans

TAHA/TAVA roof fan accessories

Connection flange

PRODUCT ADVANTAGES
• Fast connection.

RANGE

Designation	Reference	Discount family
Flange 180	11024452	***13***
Flange 250	11024453	***13***
Flange 400	11024454	***13***
Flange 560	11024455	***13***

DESCRIPTION
- Connection flange between a circular duct and roof fans or circular accessories (sleeve and non-return damper).
- Galvanised steel.

INSTALLATION
- Tightened by screws on roof fans or circular accessories.

DIMENSIONS (mm) – WEIGHT (kg)

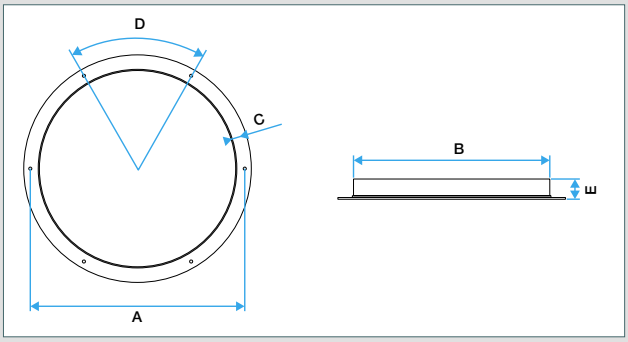

Reference	Flange model	Ø A	Ø B	C	D	E	Weight
11024452	180	213	179	6 x Ø7	6 x 60°	40	0.3
11024453	250	286	249	6 x Ø7	6 x 60°	40	0.4
11024454	400	438	399	6 x Ø7	6 x 60°	40	0.7
11024455	560	605	572	8 x Oblong 10x14	8 x 45°	30	1.9

Flexible sleeve

PRODUCT ADVANTAGES
• Less noise inside the building.

RANGE

Designation	Reference	Discount family
Flexible sleeve 180	11024457	***13***
Flexible sleeve 250	11024458	***13***
Flexible sleeve 400	11024459	***13***
Flexible sleeve 560	11024460	***13***

DESCRIPTION
- Reduces transmission of vibrations between the roof fan and the duct or other circular accessories.
- Galvanised steel with a plastic band (PES).
- Resistant up to 75°C.

INSTALLATION
- Tightened by six screws on roof fan or other circular accessories.

DIMENSIONS (mm) – WEIGHT (kg)

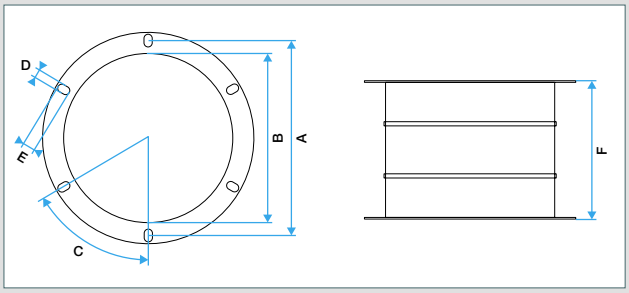

Reference	Sleeve model	A	B	C	D	E	F	Weight
11024457	180	217	183	6 x 60°	8	4	95-115	1
11024458	250	286	252	6 x 60°	10	4	95-115	1.3
11024459	400	438	402	6 x 60°	10	4	95-115	2.3
11024460	560	605	569	8 x 45°	10	4	95-115	4.5

Non-return damper

PRODUCT ADVANTAGES

- *Encourages energy savings by avoiding heating or cooling overconsumption caused by the outdoor air entering the building.*

RANGE

Designation	Reference	Discount family
Non-return damper 180	11024462	***13***
Non-return damper 250	11024463	***13***
Non-return damper 400	11024464	***13***
Non-return damper 560	11024465	***13***

DESCRIPTION

- Non-return damper.
- Galvanised steel.

INSTALLATION

- Tightened by screws directly to roof fans or other circular accessories (flange and flexible sleeve).

DIMENSIONS (mm) – WEIGHT (kg)

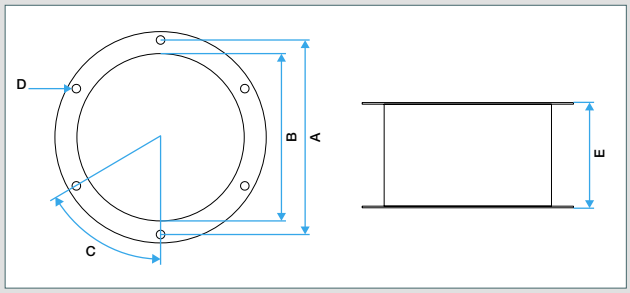

Reference	Damper model	Ø A	Ø B	C	D	E	Weight
11024462	180	217	183	6 x 60°	6 x Oblong 8x12	115	1.2
11024463	250	286	255	6 x 60°	6 x Ø10°	156	2
11024464	400	438	406	6 x 60°	6 x Ø10°	220	4.2
11024465	560	605	573	8 x 45°	8 x Ø10°	255	7.5

Connection plate

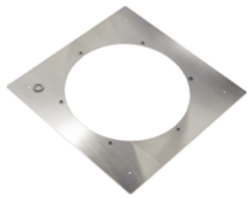

PRODUCT ADVANTAGES

- *Easy connection between the insulated stack base and circular ductwork.*

RANGE

Designation	Reference	Discount family
Connection plate 220	11024470	***13***
Connection plate 280	11024471	***13***
Connection plate 355	11024472	***13***
Connection plate 450	11024473	***13***
Connection plate 560	11024474	***13***

DESCRIPTION

- Galvanised steel plate.
- Serves to connect the square stack base and circular accessories (damper, flexible sleeve and flange).

INSTALLATION

- Tightened by screws on stack base and circular accessories.

DIMENSIONS (mm) – WEIGHT (kg)

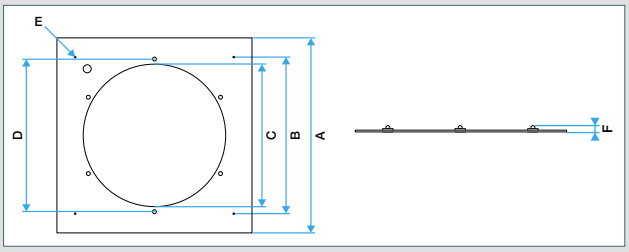

Reference	Type of plate	Ø A	Ø B	Ø C	D	E	F	Weight
11024470	220	295	220	185	Ø213 6x M6	4x Ø6.5	13	0.5
11024471	280	395	310	255	Ø286 6x M6	4x Ø6.5	13	0.8
11024472	355	438	450	407	Ø438 6x M6	4x Ø6.5	13	1.4
11024473	450	605	450	407	Ø438 6x M6	4x Ø6.5	13	2
11024474	560	605	670	575	Ø605 8x M8	4x Ø9	14	4.2

Other fans

Duct fan

VC micro-watt

VC micro-watt

PRODUCT ADVANTAGES

- *Low consumption EC motors.*
- *Constant pressure control kit (accessory).*
- *Airflow up to 1,990 m³/h.*
- *Backward curve centrifuge impeller.*

RANGE

Designation	Reference	Discount family
VC micro-watt 100	11032010	***06***
VC micro-watt 125	11032011	***06***
VC micro-watt 160	11032012	***06***
VC micro-watt 200	11032013	***06***
VC micro-watt 250	11032014	***06***
VC micro-watt 315	11032015	***06***

DESCRIPTION

- Six models, up to 1,990 m³/h with Ø 315.
- Low consumption EC motors 230 V - 50 Hz - IP 44.
- Galvanised metal body with in-line branch connectors.
- Centrifuge backward curve impeller.
- Thermal protection built into motor winding.

FIELD OF APPLICATION

- Air exhaust/supply in circular ductwork.
- For commercial and industrial buildings.

INSTALLATION

- Horizontal/vertical
- Suspended ceilings/equipment room.
- Mounting recommended with anti-vibration collars to prevent transmission of vibrations and make servicing easier.

ACCESSORIES

Designation	Reference	Discount family
Pressure tube kit (2 m)	11024466	***13***
Pressure control kit	11024467	***13***
Speed controller	11024468	***13***
Connection		
Anti-vibration collar Ø 100	11032105	***06***
Anti-vibration collar Ø 125	11032104	***06***
Anti-vibration collar Ø 160	11032101	***06***
Anti-vibration collar Ø 200	11032102	***06***
Anti-vibration collar Ø 250	11032103	***06***
Anti-vibration collar Ø 315	11032107	***06***

Designation	Reference	Discount family
Constant pressure control kit	11024467	***13***

- Controls fans for duct VC micro-watt at constant pressure.
- Two possible pressure settings: daytime and night time with dry contact switching.
- Pressure values adjustable to between 10 and 990 Pa.
- 230V - 50/60 Hz power supply.
- IP55 protection rating.

(see p.110)

DIMENSIONS (mm) – WEIGHT (kg)

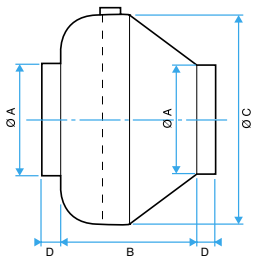

VC micro-watt

Type	A (mm)	B (mm)	C (mm)	D (mm)	Weight (kg)
100	100	188	288	30	2.8
125	125	188	288	30	2.7
160	160	170	379	30	3.0
200	200	198	379	30	3.9
250	250	195	379	30	5.0
315	315	187	402	33	6.0

AERAULIC AND ACOUSTIC CHARACTERISTICS

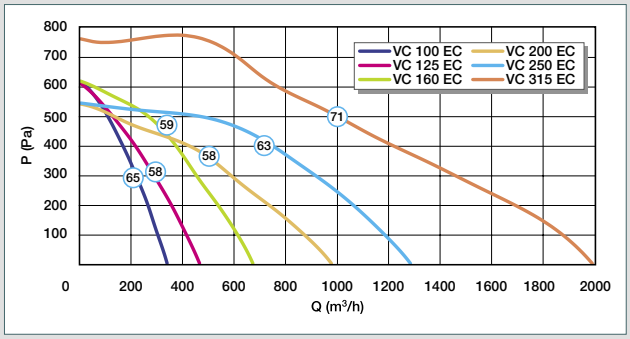

- Aeraulic curves established as per standard NF-E-51705.
- Sound power levels of fan in dB(A), air intake and discharge connected.

ELECTRICAL CHARACTERISTICS

Type	Max. power consumption (W)	Max. I. cons. (A)
100	90	0.8
125	103	0.9
160	105	0.9
200	121	1
250	183	1.6
315	270	1.9

* Complies with Eco-design Regulation 327/2011 (for models of power > 125 W) and excluded from Eco-design Regulation 1253/2014 as casing

Other fans

Duct fan

VC

VC 100 to 250

VC 315

PRODUCT ADVANTAGES

- *Airflow up to 2,360 m³/h.*
- *In-line branch connectors.*
- *Backward curve impeller.*

RANGE

Designation	Reference	Discount family
VC 100	11032005	***06***
VC 125	11032004	***06***
VC 160	11032001	***06***
VC 200 V2	11032007	***06***
VC 250 V2	11032008	***06***
VC 315 V2	11032009	***06***

DESCRIPTION

- Six models, up to 2,360 m³/h in Ø 315.
- Galvanised metal body with in-line branch connectors.
- Centrifuge impeller.
- Single-phase motor with external impeller 230 V - 50 Hz (and 60 Hz except VC 315) - IP 44.
- Thermal protection built into motor winding.

FIELD OF APPLICATION

- Air exhaust/supply in circular ductwork.
- For commercial and industrial buildings.

INSTALLATION

- Horizontal/vertical
- Suspended ceilings/equipment room.
- Mounting recommended with anti-vibration collars to prevent transmission of vibrations and make servicing easier.

ACCESSORIES

Designation	Reference	Discount family
Speed controllers		
Voltage controller 5.0 A	11086013	***07***
Single-phase electronic controller 5A	11057080	***07***
Connection		
Anti-vibration collar Ø 100	11032105	***06***
Anti-vibration collar Ø 125	11032104	***06***
Anti-vibration collar Ø 160	11032101	***06***
Anti-vibration collar Ø 200	11032102	***06***
Anti-vibration collar Ø 250	11032103	***06***
Anti-vibration collar Ø 315	11032107	***06***

DIMENSIONS (mm) – WEIGHT (kg)

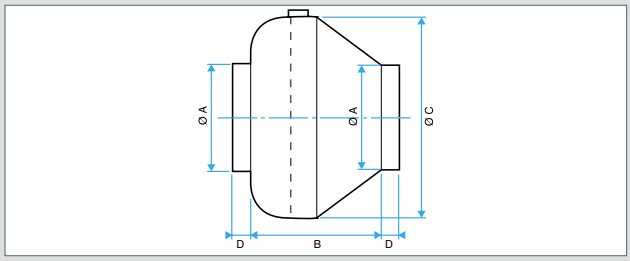

VC 100 to 250

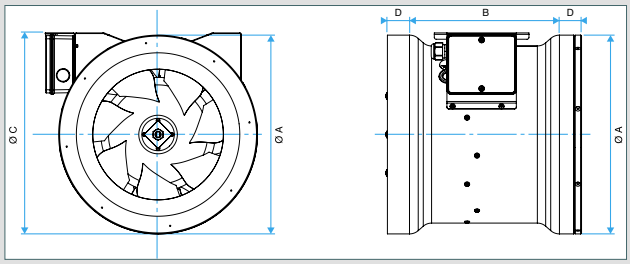

VC 315

Type	A (mm)	B (mm)	C (mm)	D (mm)	Weight (kg)
100	100	188	288	30	2.1
125	125	188	288	30	2.1
160	160	170	379	30	2.5
200	200	198	379	30	4.2
250	250	195	379	30	4.3
315	315	218	453	30	8.3

AERAULIC AND ACOUSTIC CHARACTERISTICS

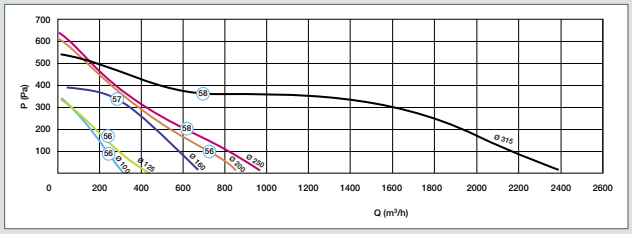

- Aeraulic curves established at 50 Hz as per standard NF-E 51.705.
- Sound power levels of fan in dB(A), air intake and discharge connected.

ELECTRICAL CHARACTERISTICS

Type	Number of Poles	Max. power consumption (W)	Max. I. cons. (A)	Capacitor (µF)
100	2	56	0.24	2
125	2	59	0.25	2
160	2	99	0.44	2
200	2	100	0.5	2.5
250	2	100	0.5	2.5
315	2	270	1.6	8

* Complies with Eco-design Regulation 327/2011 (for models of power > 125 W) and excluded from Eco-design Regulation 1253/2014 as casing

Constant pressure control kit

PRODUCT ADVANTAGES

• Reduces energy consumption.

RANGE

Designation	Reference	Discount family
Pressure tube kit (2 m)	11024466	***13***
Control kit	11024467	***13***

DESCRIPTION

- Controls fans for duct VC micro-watt at constant pressure.
- Two possible pressure settings: daytime and night time with dry contact switching.
- Pressure values adjustable to between 10 and 990 Pa.
- 230V - 50/60 Hz power supply.
- IP55 protection rating

INSTALLATION

- Direct connection to the VC micro-watt.
- Control pressure values with simple screwdriver.
- Pressure tube connection positioned in the duct.

Other fans

Axial fan

HELICA

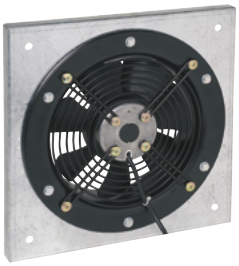

PRODUCT ADVANTAGES

- *Airflow 100 to 3,000 m³/h.*
- *Speed control possible.*
- *Simple to install.*
- *Built-in protective screen on motor side.*
- *Manufactured in France.*

RANGE

Designation	Reference	Discount family
HELICA 200 - 1500 rpm Shell V2	11032240	***08***
HELICA 200 - 2800 rpm Round shell V2	11032241	***08***
HELICA 250 - 1500 rpm Shell V2	11032242	***08***
HELICA 250 - 2800 rpm Round shell V2	11032243	***08***
HELICA 300 - 1500 rpm Shell V2	11032244	***08***
HELICA 300 - 2800 rpm Round shell V2	11032245	***08***
HELICA 350 - 1500 rpm Shell V2	11032246	***08***
HELICA 200 - 1500 rpm Square plate V2	11032250	***08***
HELICA 200 - 2800 rpm Square plate V2	11032251	***08***
HELICA 250 - 1500 rpm Square plate V2	11032252	***08***
HELICA 250 - 2800 rpm Square plate V2	11032253	***08***
HELICA 300 - 1500 rpm Square plate V2	11032254	***08***
HELICA 300 - 2800 rpm Square plate V2	11032255	***08***
HELICA 350 - 1500 rpm Square plate V2	11032256	***08***
HELICA 400 - 1500 rpm Square plate V2	11032257	***08***

DESCRIPTION

- Airflow 100 to 3,000 m³/h.
- Axial fan unit with zinc-coated impeller painted black.
- Built-in protective screen on intake side.
- Room temperature: -20 °C to +50 °C.
- IP 44 class F motor with external impeller, speed control possible.
- Single-phase power supply 230 V - 50 Hz (60 Hz possible by changing capacitor).
- Used for exhaust.

FIELD OF APPLICATION

- Ventilation of industrial, agricultural, commercial premises or housing (e.g. car park) without need for fire resistance classification, supplements the HELIONE range.

ACCESSORIES

Designation	Reference	Discount family
Voltage controller 1.5 A	11086572	***07***
HELICA 200/250/300/350 protective screen	11032222	***08***
HELICA 400 circular grille	11032223	***08***
HELICA 200/250/300 automatic flap	11032231	***08***
HELICA 350 automatic flap	11032232	***08***
HELICA 400 automatic flap	11032233	***08***

- The protective grille or automatic flap are positioned on impeller side.

DIMENSIONS (mm)

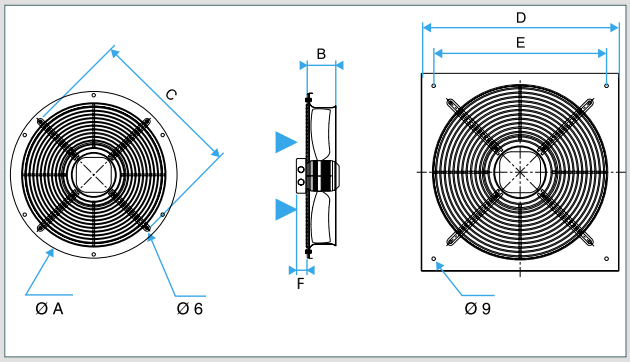

Designation	Recess Ø (mm)	A (mm)	B (mm)	C (mm)	D (mm)	E (mm)	F (mm)
HELICA 200	230	280	60	250	312	260	0
HELICA 250	280	330	65	300	370	320	0
HELICA 300	330	397	80	380	430	380	52
HELICA 350	380	460	88	442	495	435	52
HELICA 400	430	528	96	504	540	490	52

DETAILS

Designation	I max (A)	Max. cons. P (W)	Lp at 1 m dB (A)	VR weight (kg)	PC weight (kg)
HELICA 200 1500 rpm	0.16	36	50	2.4	2.8
HELICA 200 2800 rpm	0.3	67	63	2.4	2.8
HELICA 250 1500 rpm	0.17	49	55	3	3.7
HELICA 250 2800 rpm	0.55	127	71	3	3.7
HELICA 300 1500 rpm	0.41	90	61	4.5	5.2
HELICA 300 2800 rpm	0.81	180	77	4.8	5.6
HELICA 350 1500 rpm	0.8	178	63	5.8	6.6
HELICA 400 1500 rpm	1.4	312	67	9.6	10.5

AERAULIC CURVES

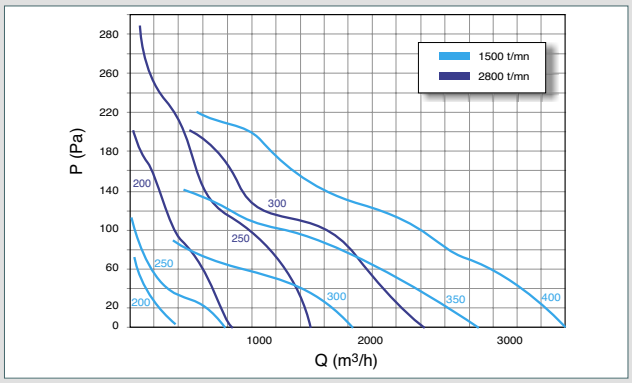

P (Pa) = static pressure, Q = airflow

* Complies with Eco-design Regulation 327/2011 (for models of power > 125 W) and excluded from Eco-design Regulation 1253/2014 as casing

Single-phase 1.5 A voltage controller

PRODUCT ADVANTAGES

- *Continuous variation.*
- *Attractive, compact box.*
- *Recessed or non-recessed mounting.*

DESCRIPTION

- Supplied in attractive IP44 box for recessed or non-recessed mounting.
- Electronic board design.
- Started by the control potentiometer.
- Built-in interference suppression (EMC).
- Built-in protective fuse.
- 230 VAC - 50/60 Hz.
- Maximum voltage controlled at minimum speed (avoids restarts at low voltage).
- Possible minimum speed control (80 V by default).

FIELD OF APPLICATION

- Voltage controller designed for single-phase 230 VAC single-speed motors with a maximum current of no more than 1.5 A, compatible with voltage variation.
- **Compatible with TAVA, TAHA, HELICA, VC and EasyVEC® Compact (except 2000).**

RANGE

Designation	W x H x D (mm)	Reference	Discount family
Voltage controller 1.5 A	82 x 82 x 65	11086572	***07***

Single-phase 3 to 10 A voltage controller

PRODUCT ADVANTAGES

- *Continuous variation.*
- *Separate ON/OFF switch.*
- *Safe start-up function - full voltage.*

DESCRIPTION

- Supplied inside IP54 box.
- Electronic board design.
- Remote ON/OFF switch (on side of box).
- Built-in interference suppression (EMC).
- Built-in protective fuse.
- 230 VAC - 50/60 Hz.
- Full voltage start-up function: on start-up, the controller applies maximum voltage for 6 to 7 seconds before returning to the voltage set by the potentiometer. This function prevents restarts at low voltage, which can damage the motor.
- Possible minimum speed control (100 V by default).

FIELD OF APPLICATION

- Voltage controller designed for single-speed 230 V single-phase motors with a maximum current of less than 3, 5 and 10 A respectively, compatible with voltage variation.
- **Compatible with VC, TAHA and TAVA.**

RANGE

Designation	W x H x D (mm)	Reference	Discount family
Voltage controller 3.0 A	83 x 140 x 88	11086024	***07***
Voltage controller 5.0 A	83 x 160 x 88	11086013	***07***
Voltage controller 10 A	115 x 195 x 95	11057067	***07***

Single-phase voltage controller

PRODUCT ADVANTAGES

- *Continuous variation.*
- *Two 0-10 V analogue inputs.*
- *Potentiometer and switch on front panel.*

DESCRIPTION

- IP 65 box.
- 230 VAC - 50/60 Hz.
- Potentiometer on front panel.
- Two 0-10 V analogue inputs.
- Adjustment of U min, U max.
- On/Off switch, power ON indicator light.
- Thermal protection.
- Faults shown by indicator light.

FIELD OF APPLICATION

- Electronic control for single-phase asynchronous motor accommodating the voltage controller.
- **Compatible with TAVA, TAHA, HELICA and VC.**

RANGE

Designation	Reference	Discount family
Single-phase electronic controller 5A	11057080	***07***
Single-phase electronic controller 11.5 A	11057081	***07***

Single-phase autotransformer

PRODUCT ADVANTAGES

- *Precise settings - 5 positions.*

DESCRIPTION

- Supplied inside IP54 box.
- Manual 5-position settings + OFF (110 - 140 - 170 - 200 - 230 V).
- Power ON indicator light.
- Built-in protective fuse.
- Additional non-adjusted 230 V output.
- 230 V AC - 50/60 Hz.

FIELD OF APPLICATION

- Controller designed for single-phase 230 V AC single-speed motors, compatible with voltage variation.
- **Compatible with TAVA, TAHA, HELICA and VC.**

RANGE

Designation	Reference	Discount family
Single-phase 1.5 A autotransformer	11086100	***07***
Single-phase 3.5 A autotransformer	11086418	***07***
Single-phase 5.0 A autotransformer	11086417	***07***
Single-phase 13 A autotransformer	11057061	***07***

Three-phase autotransformer

RANGE

Designation	Reference	Discount family
Three-phase 2A autotransformer	11086096	***07***
Three-phase 4A autotransformer	11086097	***07***
Three-phase 6A autotransformer	11086098	***07***
Three-phase 8A autotransformer	11086099	***07***
Three-phase 14A autotransformer	11057060	***07***

FIELD OF APPLICATION

• Voltage controller for single-speed asynchronous three-phase 400 V motor, compatible with voltage control.
• **Compatible with TAVA and TAHA.**

DIMENSIONS - WEIGHT

Type	W (mm)	H (mm)	D (mm)	Weight (kg)
Three-phase 2 A autotransformer	200	280	140	6.0
Three-phase 4 A autotransformer	250	300	200	14.0
Three-phase 6 A autotransformer	300	400	200	20.5
Three-phase 8 A autotransformer	300	400	200	27.7
Three-phase 14 A autotransformer	500	400	250	38.0

TECHNICAL DETAILS

• Voltage control by autotransformer.
• Three-phase 400 V, 50 Hz + neutral.
• IP55 metal box with epoxy coating.
• Front panel of box fitted with power ON indicator light and 5-position selector switch + On/Off (130 - 180 - 230 - 300 - 400 V).
• Hinged access door.
• No motor protection.

VARILONE VF: frequency inverter for professional kitchens

VARILONE VF

PRODUCT ADVANTAGES

- *Pre-set for professional kitchen use for easy wiring.*
- *Continuous and gradual airflow variation.*
- *1 remote potentiometer and high-speed emergency stop.*

RANGE

Designation	Reference	Discount family
Single/Three-phase range		
VARILONE VF 0.75 kW - Single/three-phase	11057265	***07***
VARILONE VF 1.5 kW - Single/three-phase	11057266	***07***
VARILONE VF 2.2 kW - Single/three-phase	11057267	***07***
Three-phase/Three-phase range		
VARILONE VF 0.75 kW - Three-phase/three-phase	11057270	***07***
VARILONE VF 1.5 kW - Three-phase/three-phase	11057271	***07***
VARILONE VF 2.2 kW - Three-phase/three-phase	11057272	***07***
VARILONE VF 3 kW - Three-phase/three-phase	11057273	***07***
VARILONE VF 4 kW - Three-phase/three-phase	11057274	***07***
VARILONE VF 7.5 kW - Three-phase/three-phase	11057275	***07***

DESCRIPTION

- Power ON indicator light.
- IP 20 box.
- No ON/OFF switch.
- CE and UL certification.
- Built-in class A EMC filter. Class B filter recommended for residential environments, please contact us.
- 1 status change relay if potentiometer requires 0 Hz.

Note 1: Activating the high-speed emergency stop button moves the controller to maximum smoke and heat exhaust speed in large kitchens.

Note 2: The potentiometer on the front panel is inactive, the unit can only be controlled by the remote potentiometer.

FIELD OF APPLICATION

- Frequency inverter speed controller for asynchronous three-phase motor 230/400V - 50 Hz.
- The VARILONE VF is factory-configured to be controlled by a remote RD potentiometer and a priority high-speed emergency stop button.
- Ideal for use in professional kitchens, notably to control VELONE roof fans and EXONE box fans.
- Single-speed motors only. Do not use for two-speed motors.

ACCESSORIES

- Emergency stop (closure): priority control to move the fan to high-speed mode (CPGV). IP65 box.
- Potentiometer + emergency stop button in a single IP65 box (RD + CPGV).

Designation	Reference	Discount family
RD potentiometer - IP65	11057065	***07***
RD + CPGV box	11057066	***07***
Emergency stop CPGV box	11057759	***07***

LAYOUT DIAGRAM

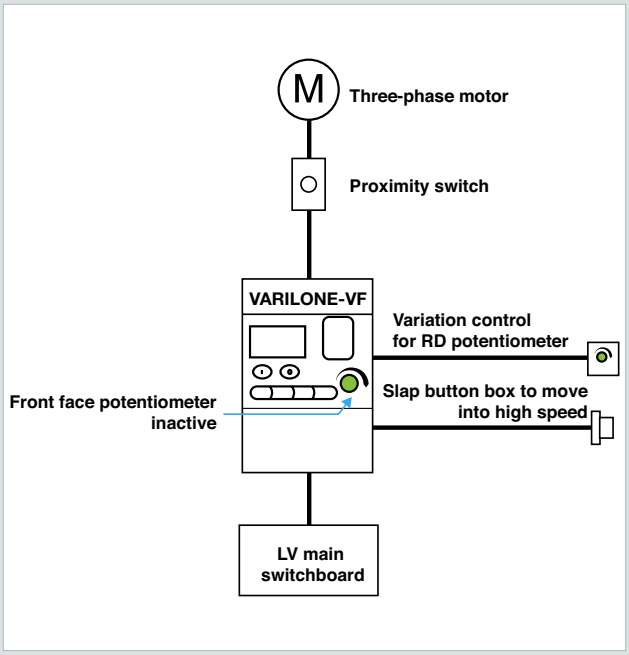

DIMENSIONS (mm)

Type of Varilone VF	Width	Height	Depth
Varilone VF 0.75 kW	110	155	136 Single/Three-phase 163 Three-phase/Three-phase
Varilone VF 1.5/2.2/3/4 kW	110	155	163
Varilone VF 7.5 kW	180	250	163

Proximity cut-off switch

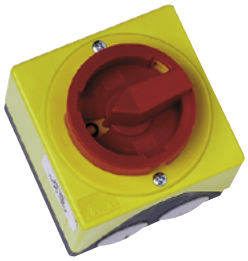

DESCRIPTION

- Features an IP64 box for surface mounting.
- Category of use: AC 23.
- Fitted with auxiliary NO and NC contacts for three-phase models only.
- Supplied with connection instructions.

FIELD OF APPLICATION

- Proximity switch with On/Off function - lockable, for category AC 23 A use (high breaking capacity).
- Compatible with all single-phase or three-phase fans (depending on maximum power consumption).

NOTE: the three-phase single-speed switch can be used to cut the power to a single-phase single-speed or two-speed motor if its power is greater than 0.9 kW.

RANGE

Designation	W x H x D (mm)	Reference	Discount family
Single-speed single-phase proximity switch - 0.9 kW	86 x 86 x 108	11056196	***07***
Single-speed three-phase proximity switch 7.5 kW + contacts	86 x 86 x 120	11057606	***07***
Single-speed three-phase proximity switch 22.5 kW + contacts	180 x 110 x 143	11057607	***07***
Single-speed three-phase proximity switch 30 kW + contacts	182 x 180 x 148	11057608	***07***
Two-speed three-phase proximity switch 7.5 kW + contacts	86 x 86 x 120	11057613	***07***
Two-speed three-phase proximity switch 22.5 kW + contacts	182 x 180 x 148	11057610	***07***
Two-speed three-phase proximity switch 30 kW + contacts	254 x 180 x 148	11057611	***07***

Time delay

DESCRIPTION

- AC 230 V 50/60 Hz.
- Screw-adjustable time delay on front panel, from 30 sec to 10 min.
- Dimensions L = 17.5 mm x H = 89 mm x D = 58 mm, weight 75 g.
- IP40 box.
- Mounted on rail.
- LED operating indicator.
- 2-position button on front panel (fan = forced operation, double circle = time delay).

FIELD OF APPLICATION

- This accessory enables the fan unit to operate for 30 seconds to 10 minutes after the mains power supply to the ventilation system is cut off.
- Strongly recommended with a heating coil.

RANGE

Designation	Reference	Discount family
Fan timer	11057083	***06***

Thermal-magnetic circuit breaker

Thermal-magnetic circuit breaker presented with locking kit

DESCRIPTION

- Circuit breaker - thermal-magnetic cut-off.
- Features an IP55 box for non-recessed mounting.
- Variable current range (thermal protection).
- Delivered with two cable glands and connection instructions.
- Accessories (delivered as kits, not assembled).

FIELD OF APPLICATION

- Thermal-magnetic protection on motor (against over-currents and grid short circuits).
- Protection against phase faults.
- Compatible with all single-phase and three-phase single-speed fans (depending on maximum current consumption).

RANGE

Designation	Reference	Discount family
Circuit breaker 0.4 - 0.6 A	11056183	***07***
Circuit breaker 0.63 - 1.0 A	11056109	***07***
Circuit breaker 1.0 - 1.6 A	11056184	***07***
Circuit breaker 1.6 - 2.5 A	11057052	***07***
Circuit breaker 2.5 - 4 A	11057053	***07***
Circuit breaker 4 - 6.3 A	11057054	***07***
Circuit breaker 6.3 - 10 A	11057055	***07***
Circuit breaker 11 - 16 A	11057056	***07***
Adapter plate for old circuit breaker/VEC	11025002	***80***

Pressure switch alarm kit

RANGE

Designation	Reference	Discount family
40-300 Pa adjustable pressure switch kit	11091001	***07***
100-1000 Pa adjustable pressure switch kit	11091002	***07***
Pressure switch time delay (recommended in case of wind gusts)	11025012	***07***
EasyVEC® 20-300 Pa adjustable pressure switch kit	11056440	***13***

DESCRIPTION

- Box to be installed inside ventilation box fan or on ductwork.
- Supplied as full kit, ready for installation. Kit comprises 2 m of crystal tubing, 2 pressure taps or cable guides, fasteners and fixed (80 Pa) or adjustable pressure switch and installation instructions.

FIELD OF APPLICATION

- This safety device can detect operational anomalies with the fan (pressure drop) and thus comply with the implementation standards.
- **Compatible with all fans, units or roof fans manufactured by ALDES.**

ASSEMBLY DIAGRAMS

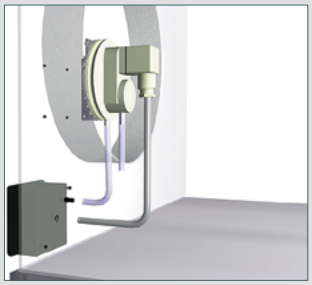

Fixed pressure switch kit

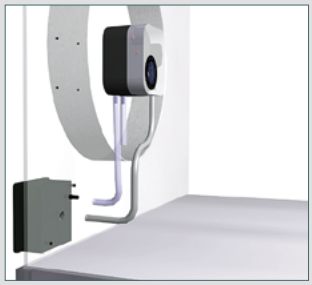

Adjustable pressure switch kit

Filter clogging detection kit

DESCRIPTION

- The kit contains 4.5 m of crystal tubing, 4 pressure taps, 1 adjustable pressure switch alarm 20-300 Pa, fasteners and installation instructions.

FIELD OF APPLICATION

- This accessory can detect a pressure drop at an adjustable value, caused by filter clogging.
- **Compatible with EasyVEC® and VIK.**

RANGE

Designation	Reference	Discount family
VIK filter clogging detection kit	11056313	***80***
EasyVEC® filter clogging kit	11056000	***13***

Notes

FIRE PROTECTION

Selection guide . . . . . p. 124
Smoke and Heat exhaust fans . . . . . p. 127
Relay boxes . . . . . p. 179
Smoke exhaust dampers and air inlets . . . . . p. 190
Selection guide . . . . . p. 186
Fire dampers and cartridges . . . . . p. 230
Selection guide . . . . . p. 245

ProtectONE® T

Smoke exhaust fans F400-120 fire rated Belt-driven

- **Easy to adjust:** Easily adjusted airflow on site with the exclusive ProtectONE® Adapt system
- **Easy to install:** Design more compact, simple and elegant
- **Easy to integrate:** Can be fully dismantled as standard.

→ Page 136

SMOKE AND HEAT EXHAUST FANS

Selection guide **p. 124**

Box fans

ProtectONE® R (Direct-coupling) **p. 127**

ProtectONE® T (Belt-driven) **p. 136**

Roof fans

VELONE range **p. 156**

Axial fans

HELIONE range **p. 172**

RELAY BOXES

Relay boxes for smoke exhaust fans

AXONE Micro II boxes range **p. 179**

AXONE Micro 1V/DES **p. 182**

AXONE Micro 1V/DES - D.PROG **p. 183**

AXONE Micro 2V/DES **p. 184**

AXONE Micro 2V/CONF **p. 185**

SMOKE EXHAUST DAMPERS AND AIR INLETS

Selection guide for smoke exhaust dampers **p. 186**

Smoke exhaust dampers & grilles

Optone damper **p. 194**

Protection grille GFA Steel **p. 201**

GFAP, GFE and GGH grilles **p. 203**

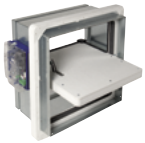

Plafone damper **p. 210**

GDF transfer damper **p. 212**

Air inlets for fresh air

Oxytone panneau (panel air inlet) **p. 214**

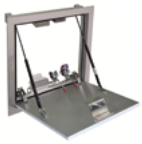

Airone **p. 216**

Oxytone lame (bladed air inlet) **p. 219**

Smoke exhaust for Multi-family housing

Smoke exhaust damper Optone H + Grille **p. 224**

Fire protection board Ordone **p. 226**

Manual trigger & Smoke detector **p. 227**

S.O.S. Velone 4.5 / 7.2 device **p. 227**

FIRE DAMPERS & CARTRIDGES

Selection guide for fire dampers **p. 245**

Fire dampers with Belimo mechanism

ISONE®2 Europe Circular **p. 233**

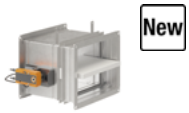

ISONE®2 Europe Rectangular **p.235**

Belimo mechanism **p. 243**

Fire dampers with Isone®2 mechanism

ISONE®2 Circular **p. 233**

ISONE®2 Rectangular **p.235**

ISONE®2 mechanism **p. 237**

High pressure fire dampers

Isone 1500 **p. 245**

Terminal cartriges and grilles

Terminal cartriges and grilles CF1/ CF2 **p. 247**

Testing equipment

ALDES CONTROL pack **p. 248**

PRINCIPLE AND OPERATION OF ALDES FIRE PROTECTION SOLUTIONS

To fight fire effectively, it is essential to combine compartmentation and smoke exhaust.

- Smoke exhaust ductwork
- Smoke exhaust fan
- Screen
- Smoke control dampers
- Fresh air
- Smoke and hot air

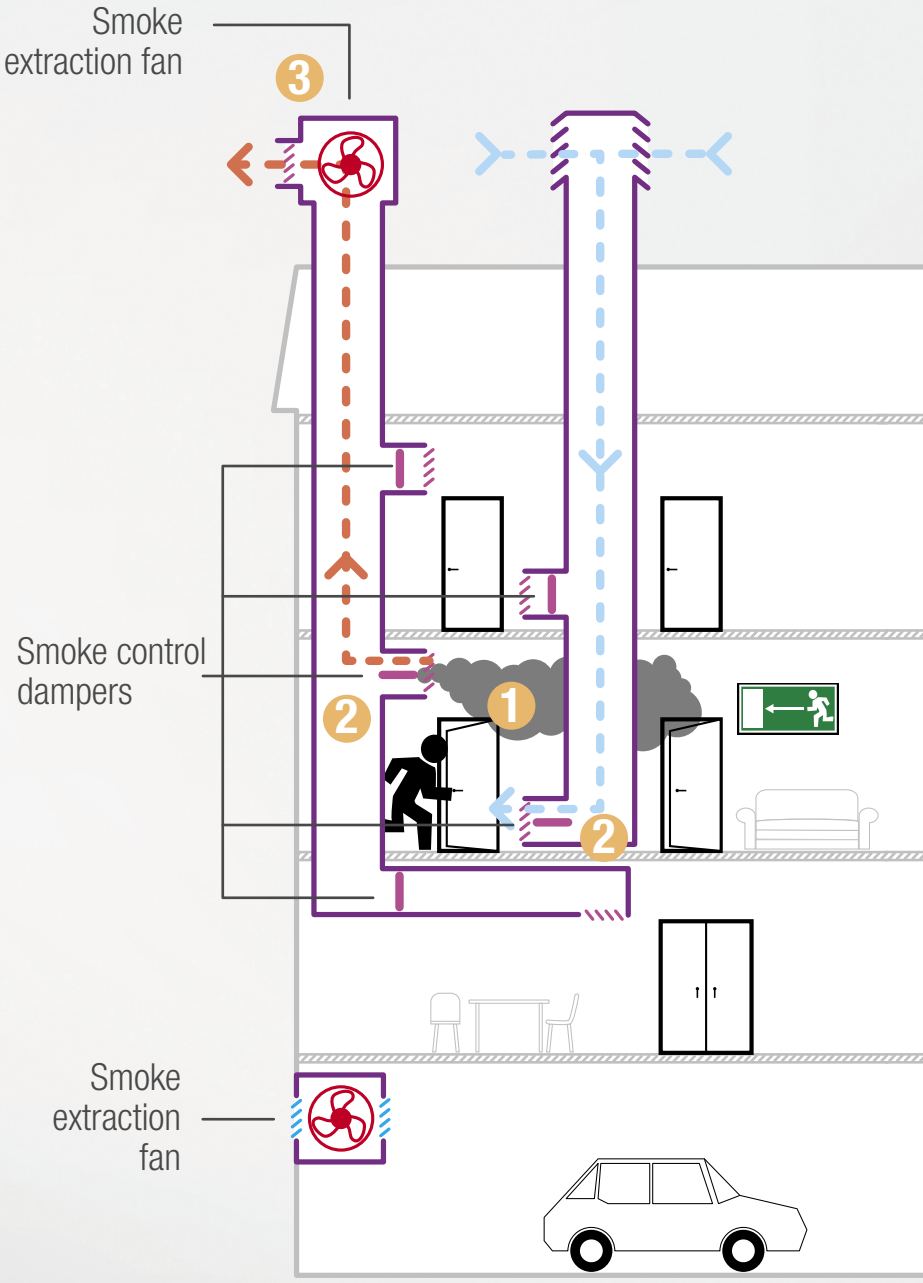

SMOKE EXHAUST

By extracting the smoke produced by the fire, the smoke exhaust system creates a band of breathable air under the smoke layer and facilitates the evacuation of people and emergency services access to the area.

Video of corridor smoke extraction test

FIRE PROTECTION IN 3 STEPS:

1. Smoke is detected.
2. Smoke control dampers are opened and fire dampers are closed.
3. Smoke extraction fan unit is activated.

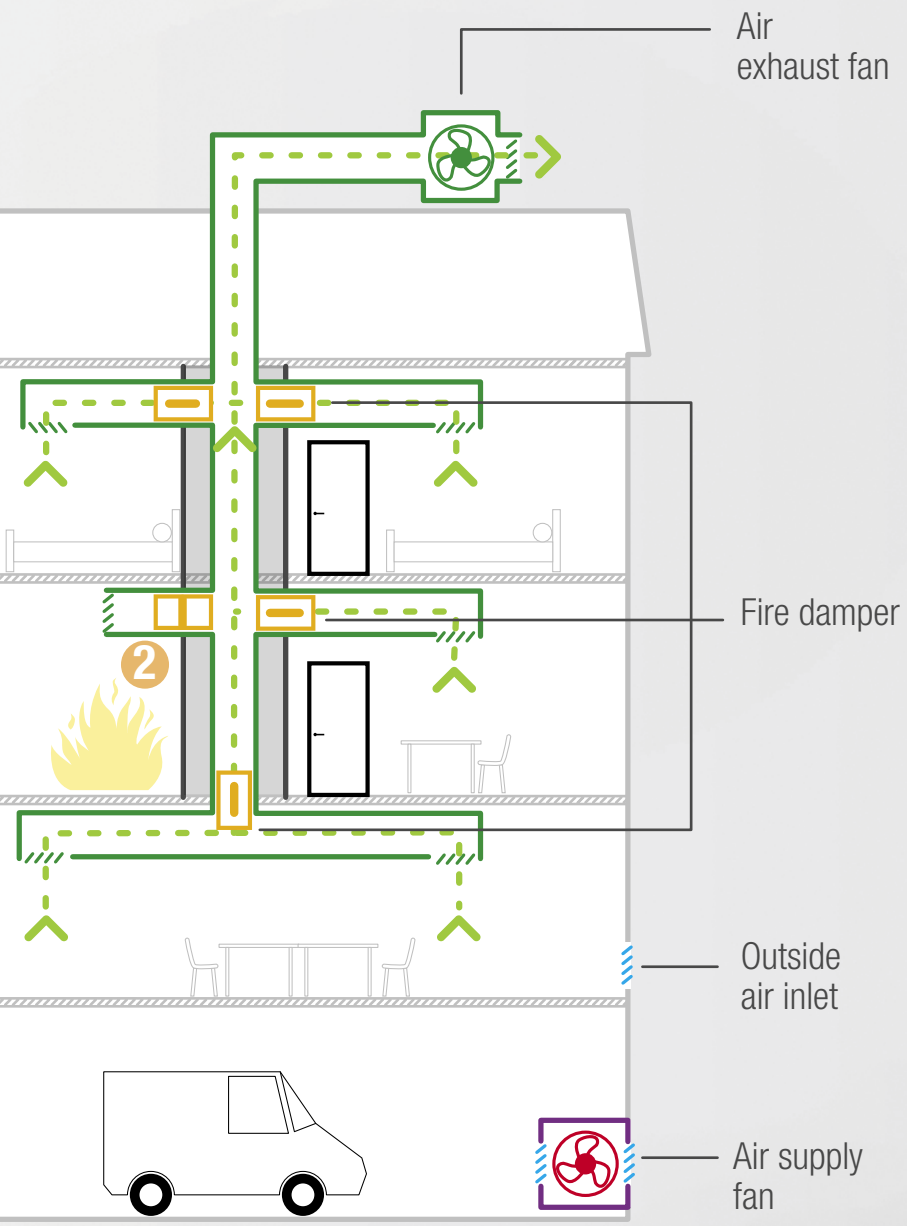

- Ventilation ductwork
- Air exhaust fan (conventional ventilation circuit)
- Ventilation grilles
- Fire damper open
- Fire damper closed

COMPARTMENTATION

Compartmentation is designed to contain fire within the area where it breaks out, prevent the spread of flames and smoke to the whole building by restoring the fire protection rating of the walls.

SELECTION GUIDE FAN UNITS

The **Aldes** range of F400-120 fan units is designed to fit all building configurations, from the most simple to the most complex. The range holds a number of certifications.

The specific nature of mechanical smoke exhaust is the use of extraction fans or even air supply fans, designed to remove and replace air at a target airflow, with consistent performance over time, whatever the weather conditions.

The choice depends on the type of system and the required performance levels.

TYPE	MODEL	AIRFLOW (m³/h)		PRESSURE (Pa)		AIR EXHAUST / AIR SUPPLY
		MIN	MAX	MIN	MAX	
Roof fan	VELONE page 48	500	27 000	60	800	
Axial fan	HELIONE page 64	1 500	290 000	100	600	/
Box fan	ProtectONE® TA page 29	1 000	40 000	100	1 300	/
	ProtectONE® TR page 38	1 000	35 000	100	2 500	/
	ProtectONE® R page 19	500	21 000	50	1 200	/
	EasyVEC® standard See EasyVEC pages	500	16 000	100	700	

Points to remember:

- the Velone roof fan is well suited to new construction and refurbishment projects due to its backward curve impeller which delivers high pressure levels with small dimensions,
- Helione fan units are perfect for car parks with their dual purposes of ventilation and smoke exhaust, delivering huge exhaust airflows. They can be installed in multiple arrangements: in ducts, through partition walls, with the shaft in a vertical or horizontal position,
- For installations in utility rooms or on flat roofs, the fan units and their range of accessories can be connected to any type of ductwork. The insulation option can reduce noise for systems that operate on a permanent basis (ProtectONE® R, ProtectONE® TR) or to protect the area where the unit is installed (ProtectONE® R, ProtectONE® TA and ProtectONE® TR),
- With the ProtectONE® Adapt device, there is no compromise between simplicity and security, it Fast and reliable on-site flow control.

TECHNOLOGY					ADDITIONAL OPTIONS					
TYPE OF DRIVE SYSTEM		TYPE OF WHEEL								
DIRECT DRIVE	BELT + PULLEY	FORWARD CURVE	BACKWARD CURVE	HELICAL	ACOUSTIC / THERMAL INSULATION	CONNECTED RELAY BOX ALL-IN-ONE	CLASS	SINGLE-PHASE MODEL	ErP 2016	BUILT-IN ADJUSTMENT MECHANISM
●			●			●	F400 - 120	●	●	
●				●			F200 - 120 F400 - 120		●	
	●	●			Acoustic / thermal	●	F400 - 120			●
	●		●		Acoustic / thermal	●	F400 - 120		●	●
●			●		Acoustic / thermal	●	F400 - 120		●	●
●			●		Acoustic	●			●	

Crédit photos : Getty Images - 2020

THE RANGE OF SMOKING CASES ProtectONE® THAT SECURES BUILDINGS

SMOKE EXHAUST FANS F400-120 RATED

ProtectONE® T

- The range of **ProtectONE® T** smoke exhaust fans is available up to 40,000 m^3/h.
- An action and reaction wheel offer is available, with a pulley-belt transmission.
- The exclusive **ProtectONE® Adapt** airflow control device is available as an option.
- With 9 different sizes, **ProtectONE® T** meets the needs of all types of buildings.

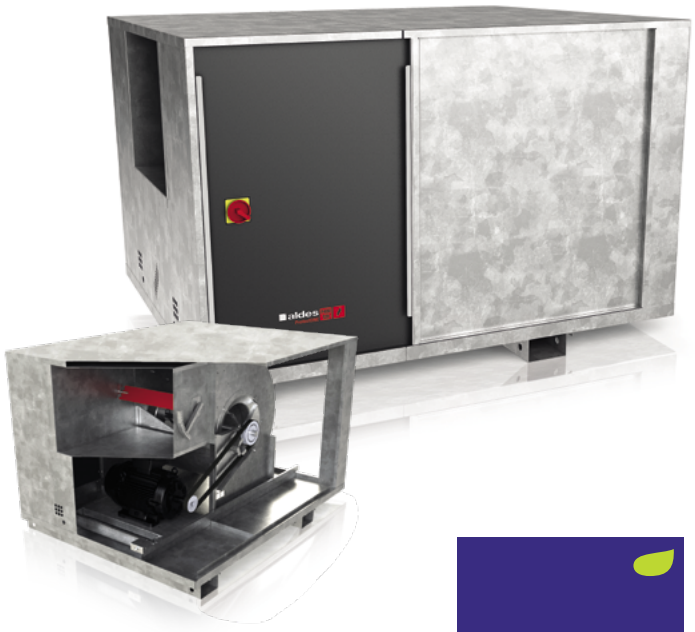

#HealthyLiving

aldes

Smoke and heat exhaust fans

ProtectONE® R F400-120 smoke and heat exhaust box fans

Presentation of ProtectONE® R range

ProtectONE model with 90° discharge

ProtectONE model with in-line discharge (EL)

PRODUCT ADVANTAGES

- *Easily adjusted airflow with the exclusive ProtectONE® Adapt mechanism.*
- *Can be fully dismantled as standard.*
- *Modular discharge connection.*
- *2 types of box units to meet all situational requirements.*
- *The backward-curve impeller produces better results through smaller variation in airflow if pressure loss values vary.*

COMPLIANCE

- *Compliant with CE marking 1812-CPR-1181.*
- *Approved for EFECTIS F400-120 as per EN12101-3.*
- *Free-wheel fan motor compliant with ErP 2018 regulations.*
- *Relay box compliant with NF S61-937-1, NF S61937-9, NF 278.*

DESCRIPTION

- Adjustment mechanism built into box.
- 10 sizes of box for airflow rates between 500 and 22,500 m3/h.
- Backward-curve centrifugal impeller with direct coupling to motor for best results.
- Class F IP54 electric motor.
- 3-phase 2 V motor available.

More ease of adjustment

Exclusive airflow adjustment mechanism built into the box: ProtectONE Adapt, can also be used when the unit is connected.

Adjustment damper:

- Mechanical airflow adjustment mechanism built into the box, exclusive to ALDES.
- Adjustment from outside the box using a standard M6 size Allen key.
- Adjustment damper locking mechanism level II as per NF S61-933 of Sept. 2011.

More ease of installation

- ProtectONE® R can be fully dismantled as standard, which is ideal for passing through a door or accessing an attic.
- Modular discharge connection: left / right / vertical on 90° model, left / right access on EL (in-line) model.

More ease of integration

- Discreet and sleek design, compact dimensions for optimum integration in any type of building, no visible motor.

FIELD OF APPLICATION

- Smoke and hot gas venting in case of fire in all commercial buildings.
- Exhaust air extraction in commercial and industrial buildings.
- Pollutant extraction in professional kitchens.

INSTALLATION

- Can be installed indoors or outdoors.
- Indoor installation: requires the thermal insulation option.
- Outdoor installation: requires a rain hood.
- Proximity switch delivered fitted and cables with position contacts.

ACCESSORIES

- Square/circular plate for adaptation of air intake.
- Rain hood with anti-bird protection on discharge outlet.
- Rectangular flexible sleeve.
- Circular flexible sleeve.
- Anti-vibration mounts.
- Backdraft damper (saves energy by preventing cold outdoor air from entering smoke exhaust ducts).

AVAILABLE OPTIONS

- All-in-One solution: saves time on cabling, operational guarantee and simplified installation on site. Always includes the relay box, switch, pressure switch.
- Variable pressure switch 20-300 Pa (1 pressure switch per smoke exhaust speed setting).
- Choice of discharge connector position: left/right/vertical on 90° model.
- Choice of discharge connector position: left/right on EL model.
- Thermal insulation compliant with CE marking as per EN 12101-3

PRESENTATION OF ACCESSORIES RANGE

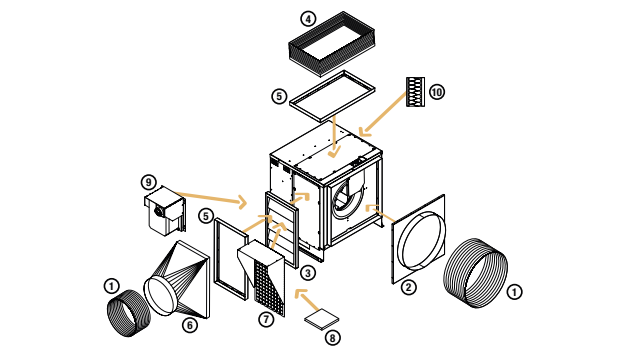

90° unit overview

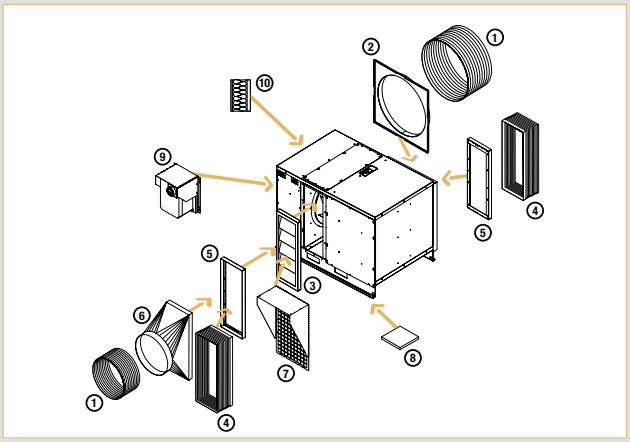

EL unit overview

1- Flexible discharge sleeve 2- Rectangular-circular adapter piece for air intake 3- Airflow adjustment damper 4- Rectangular flexible sleeve 5- Discharge flange 6- Rectangular-circular adapter piece for discharge 7- Rain hood and anti-bird protective mesh 8- Anti-vibration mount 9- Relay box 10- Insulation

Smoke and heat exhaust fans

ProtectONE® R F400-120 smoke and heat exhaust box fans

ProtectONE® R 1V (1 speed)

ProtectONE Adapt control plate

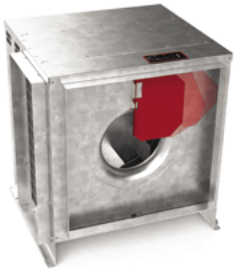

ProtectONE Adapt adjustment damper

PRODUCT ADVANTAGES

- *Easily adjusted with the exclusive ProtectONE® Adapt mechanism.*
- *Can be fully dismantled as standard.*
- *Modular discharge connection.*
- *2 types of box units to meet all situational requirements.*
- *The backward-curve impeller produces better results through smaller variation in airflow if pressure loss values vary.*

COMPLIANCE

- *Compliant with CE marking 1812-CPR-1181*
- *Approved for EFECTIS F400-120 as per EN12101-3.*
- *Compliant with ErP 2018 regulations.*
- *Relay box compliant with NF S61-937-1, NF S61937-9, NF 278.*

RANGE

Designation	Reference	Type
Standard version		
ProtectONE® R 2.0	11039260	T1
ProtectONE® R 4.0	11039261	
ProtectONE® R 5.0 2P	11039262	
ProtectONE® R 6.5	11039263	T2
ProtectONE® R 8.0	11039264	
ProtectONE® R 9.0 2P	11039265	
ProtectONE® R 10.0	11039266	T3
ProtectONE® R 12.0	11039267	
ProtectONE® R 15.0	11039268	
ProtectONE® R 21.0	11039269	
EL version (In-line)		
ProtectONE® R 2.0 EL	11039270	T1 EL
ProtectONE® R 4.0 EL	11039271	
ProtectONE® R 5.0 2P EL	11039272	
ProtectONE® R 6.5 EL	11039273	T2 EL
ProtectONE® R 8.0 EL	11039274	
ProtectONE® R9.0 2P EL	11039275	
ProtectONE® R 10.0 EL	11039276	T3 EL
ProtectONE® R 12.0 EL	11039277	
ProtectONE® R 15.0 EL	11039278	
ProtectONE® R 21.0 EL	11039279	

DESCRIPTION

- Exclusive airflow adjustment mechanism built into the box with ProtectONE® Adapt
- 10 different unit sizes for airflow from 500 to 22,500 m3/h.
- Backward-curve centrifugal impeller with direct coupling to motor for best results.
- Class F IP54 electric motor.
- 3-phase 2 V motor : see ProtectOne 2 speed pages.

EL UNIT CONNECTION CHOICES

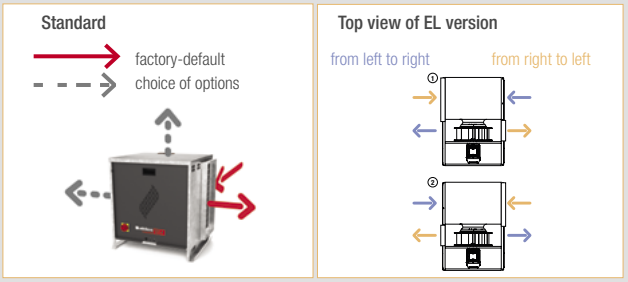

DIMENSIONS (MM)

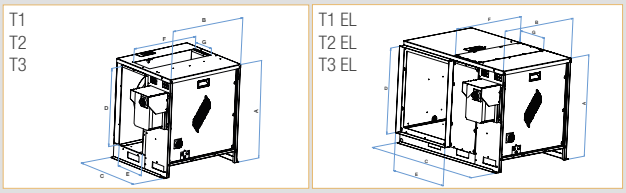

						Discharge		air intake	
Type	L	w	H	Insulation	Flange	a	b	c	d
T1	630	745	775	L+50 H+25	W+20	304	656	597	597
T2	770	835	875	L+50 H+25	W+20	341	748	696	696
T3	910	965	1020	L+50 H+25	W+20	516	911	797	797
T1 EL	1070	745	775	L+50 H+25	W+20	304	656	528	659
T2 EL	1195	835	875	L+50 H+25	W+20	341	748	548	751
T3 EL	1430	965	1020	L+50 H+25	W+20	516	911	701	911

ELECTRICAL DETAILS / WEIGHT

Type	Poles	U (V)	P (kW)	In (A) 230 V	In (A) 400 V	Id /In	Weight (Kg)
R 2.0 **R 2.0 EL**	6P	230 V / 400 V	0.37	1.82	1.05	3.9	61 75
R 4.0 **R 4.0 EL**	4P	230 V / 400 V	0.55	2.2	1.27	6	61 75
R 5.0 2P **R 5.0 2P EL**	2P	230 V / 400 V	1.5	5.44	3.14	7	66 80
R 6.5 **R 6.5 EL**	4P	230 V / 400 V	1.1	4.16	2.4	6.5	89 106
R 8.0 **R 8.0 EL**	4P	230 V / 400 V	1.5	5.65	3.26	6.3	94 111
R 9.0 2P **R 9.0 2P EL**	2P	230 V / 400 V	4	13.22	7.63	7	108 124
R 10.0 **R 10.0 EL**	4P	230 V / 400 V	2.2	8.04	4.64	7	167 190
R 12.0 **R 12.0 EL**	4P	230 V / 400 V	3	10.7	6.17	6.5	172 195
R 15.0 **R 6.5 EL**	4P	230 V / 400 V	4	14.06	8.12	6.6	183 206
R 21.0 **R 21.0 EL**	4P	230 V / 400 V	5.5	18.2	10.5	7.3	213 236

ProtectONE® R 1V (1 speed)

AIRFLOW DETAILS

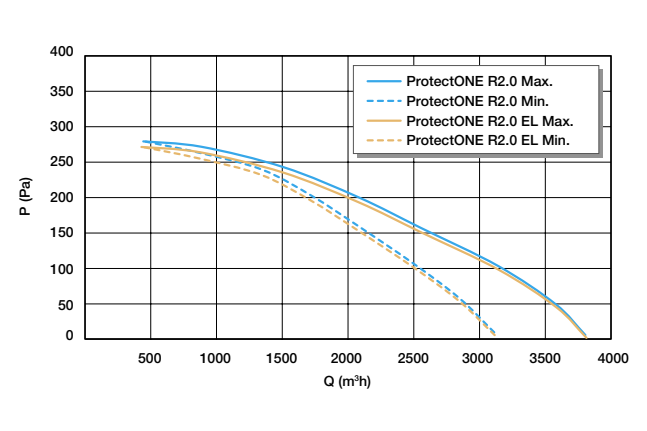

ProtectONE® R2.0

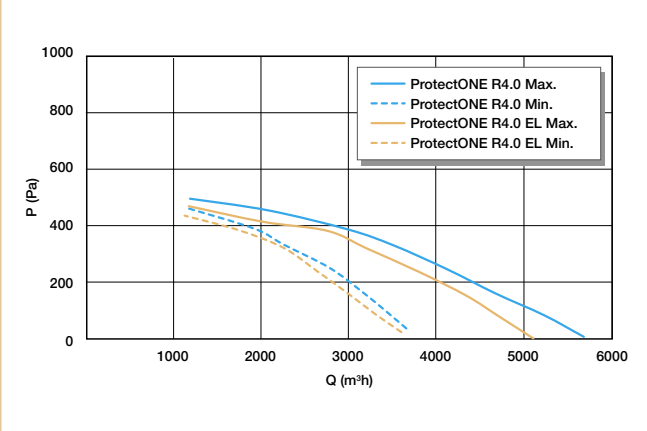

ProtectONE® R4.0

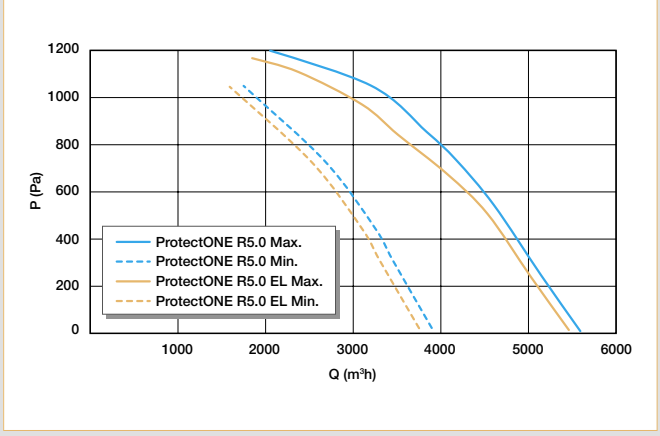

ProtectONE® R5.0

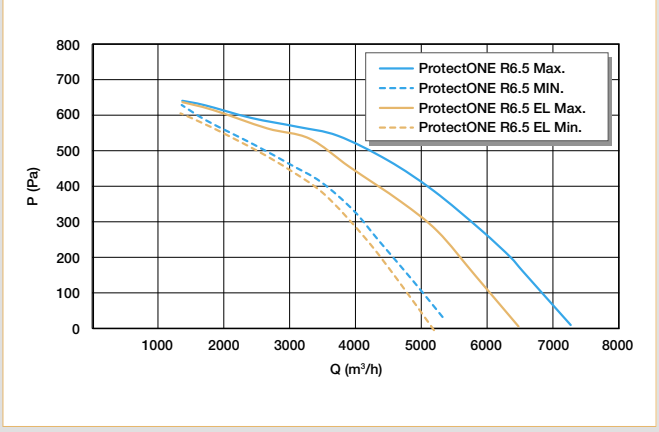

ProtectONE® R6.5

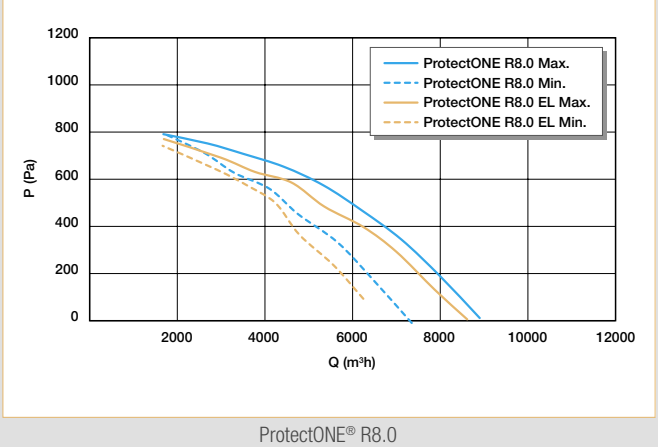

ProtectONE® R8.0

ProtectONE® R 1V (1 speed)

AIRFLOW DETAILS

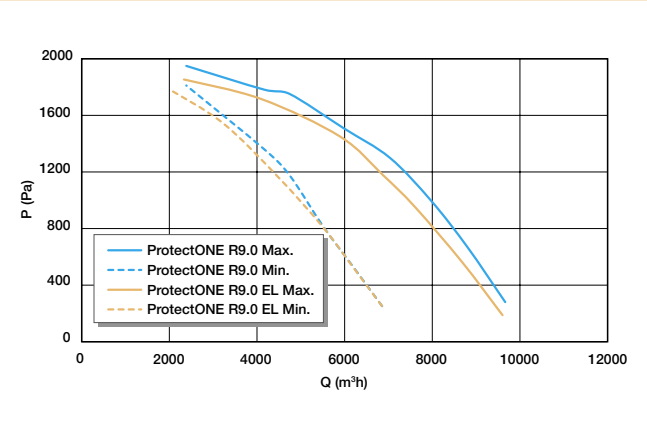

ProtectONE® R9.0

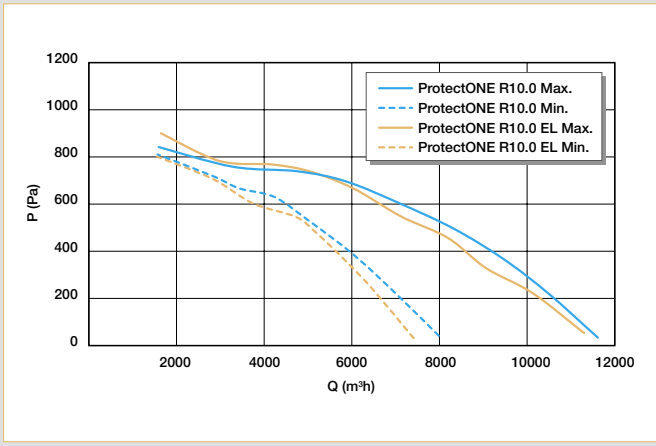

ProtectONE® R10.0

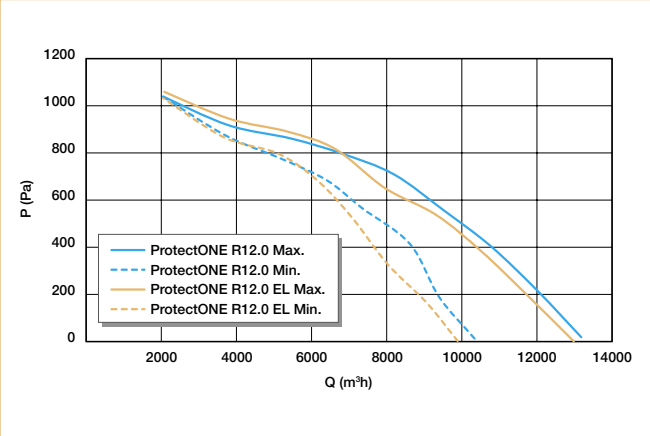

ProtectONE® R12.0

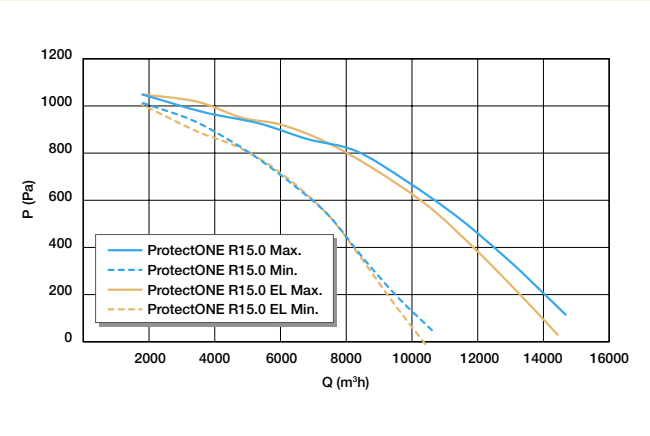

ProtectONE® R15.0

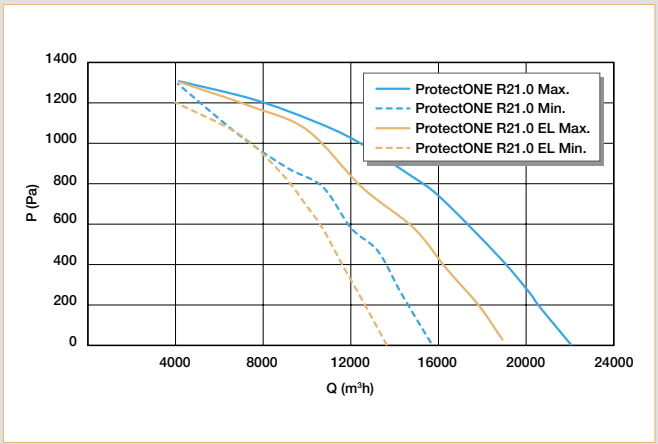

ProtectONE® R21.0

ProtectONE® R 2V (2 speed)

ProtectONE Adapt control plate

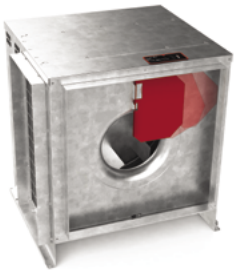

ProtectONE Adapt adjustment damper

PRODUCT ADVANTAGES

- *Easily adjusted with the exclusive ProtectONE® Adapt mechanism.*
- *Can be fully dismantled as standard.*
- *Modular discharge connection.*
- *2 types of box units to meet all situational requirements.*
- *The backward-curve impeller produces better results through smaller variation in airflow if pressure loss values vary.*

COMPLIANCE

- *Compliant with CE marking 1812-CPR-1181.*
- *Approved for EFECTIS F400-120 as per EN12101-3.*
- *Compliant with ErP 2018 regulations.*
- *Relay box compliant with NF S61-937-1, NF S61937-9, NF 278.*

RANGE

Designation	Reference	Type
Standard version		
ProtectONE® R 4.0 2V	11039281	T1
ProtectONE® R 5.0 2P 2V	11039282	
ProtectONE® R 6.5 2V	11039283	T2
ProtectONE® R 8.0 2V	11039284	
ProtectONE® R 9.0 2P 2V	11039285	
ProtectONE® R 10.0 2V	11039286	T3
ProtectONE® R 12.0 2V	11039287	
ProtectONE® R 15.0 2V	11039288	
ProtectONE® R 21.0 2V	11039289	
EL version (In-line)		
ProtectONE® R 4.0 EL 2V	11039291	T1 EL
ProtectONE® R 5.0 EL 2P 2V	11039292	
ProtectONE® R 6.5 EL 2V	11039293	T2 EL
ProtectONE® R 8.0 EL 2V	11039294	
ProtectONE® R 9.0 EL 2P 2V	11039295	
ProtectONE® R 10.0 EL 2V	11039296	T3 EL
ProtectONE® R 12.0 EL 2V	11039297	
ProtectONE® R 15.0 EL 2V	11039298	
ProtectONE® R 21.0 EL 2V	11039299	

DESCRIPTION

- Exclusive airflow adjustment mechanism built into the box with ProtectONE® Adapt.
- 10 different unit sizes for airflow from 500 to 22,500 m3/h.
- Backward-curve centrifugal impeller with direct coupling to motor for best results.
- Class F IP54 electric motor.
- EL version : in-line version.

EL UNIT CONNECTION CHOICES

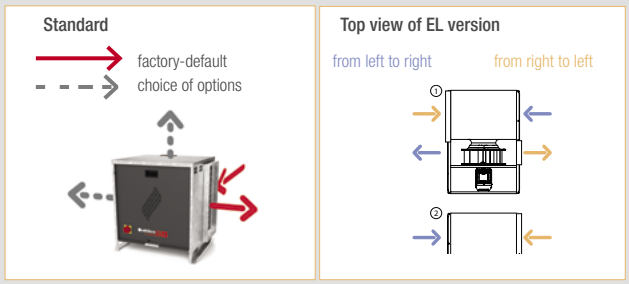

DIMENSIONS (MM)

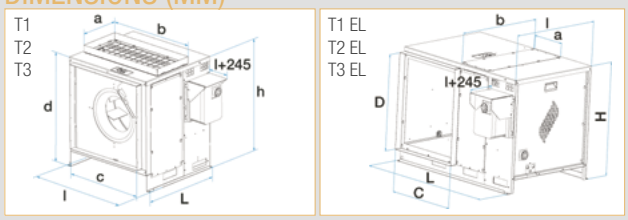

						Discharge		air intake	
Type	L	w	H	Insulation	Flange	a	b	c	d
T1	660	745	775	L+50 H+25	l+20	304	656	597	597
T2	770	835	875	L+50 H+25	l+20	341	748	696	696
T3	910	965	1020	L+50 H+25	l+20	516	911	797	797
T1 EL	1070	745	775	L+50 H+25	l+20	304	656	528	659
T2 EL	1195	835	875	L+50 H+25	l+20	341	748	548	751
T3 EL	1430	965	1020	L+50 H+25	l+20	516	911	701	911

ELECTRICAL DETAILS / WEIGHT

Type	Poles	U (V)	P (W)	In (A)	Id/In	Weight
R4.0	BI-4/6	400	0,55/0,2	1,75/1,05	5/3,7	69
R4.0 EL						83
R5.0	DAH-2/4	400	1,5/0,37	3,58/1,19	7/5	75
R5.0 EL						89
R6.5	BI-4/6	400	1,5/0,37	3,65/1,62	5,5/4,5	102
R6.5 EL						119
R8.0	BI-4/6	400	1,7/0,6	4,42/2,33	6,5/5	109
R8.0 EL						126
R9.0	DAL-2/4	400	4,4/1,1	8,59/2,79	7,8/5	122
R9.0 EL						138
R10	BI-4/6	400	2,2/0,7	4,91/2,48	6/5,5	170
R10 EL						193
R12	BI-4/6	400	3/1	6,85/3,86	7,6/6,2	176
R12 EL						199
R15	BI-4/6	400	4,5/1,5	10,2/5,38	7,5/7	208
R15 EL						231
R21	BI-4/6	400	6/2,2	13,7/6,96	7,8/7,4	226
R21 EL						249

ProtectONE® R 2V (2 speed)

AIRFLOW DETAILS

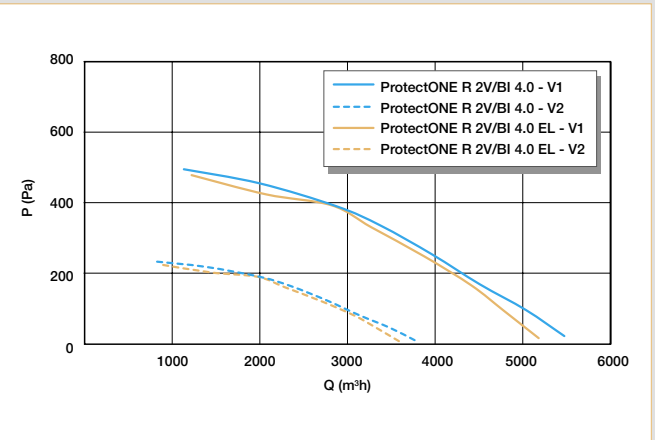

ProtectONE® R 2V/BI 4.0

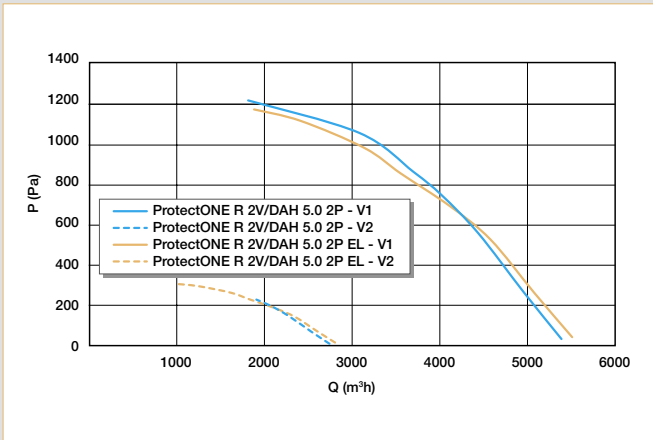

ProtectONE® R 2V/DAH 5.0

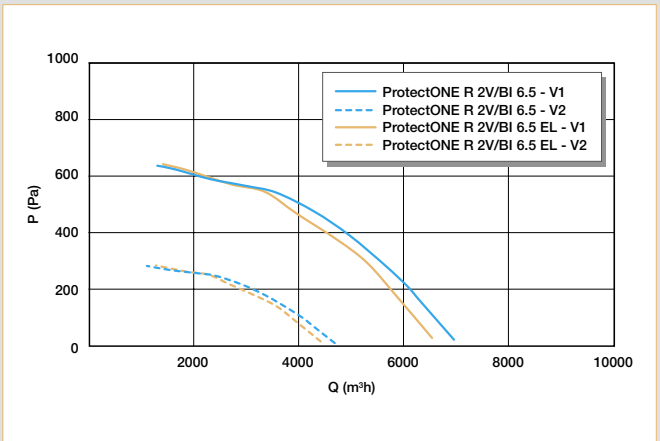

ProtectONE® R 2V/BI 6.5

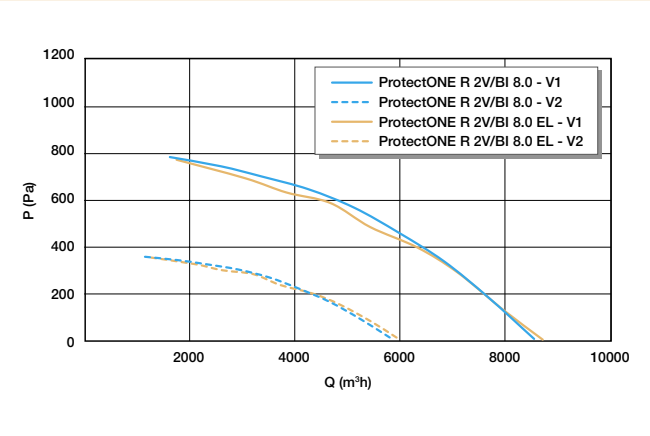

ProtectONE® R 2V /BI 8.0

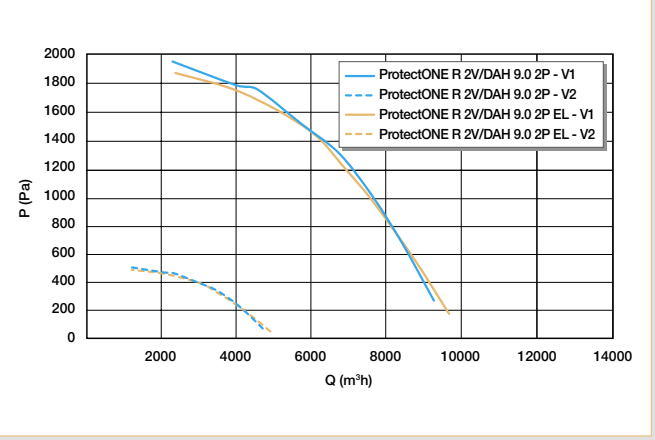

ProtectONE® R 2V/DAH 9.0

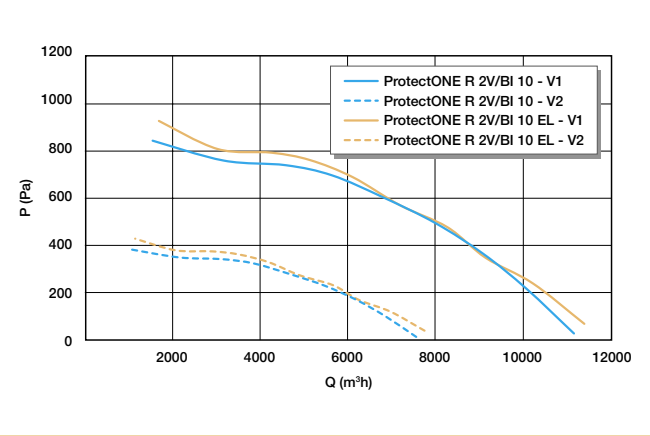

ProtectONE® R 2V/BI 10.0

ProtectONE® R 2V (2 speed)

AIRFLOW DETAILS

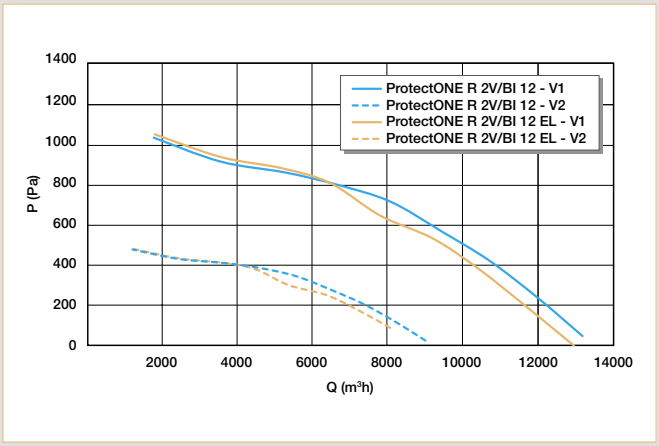

ProtectONE® R 2V/BI 12.0

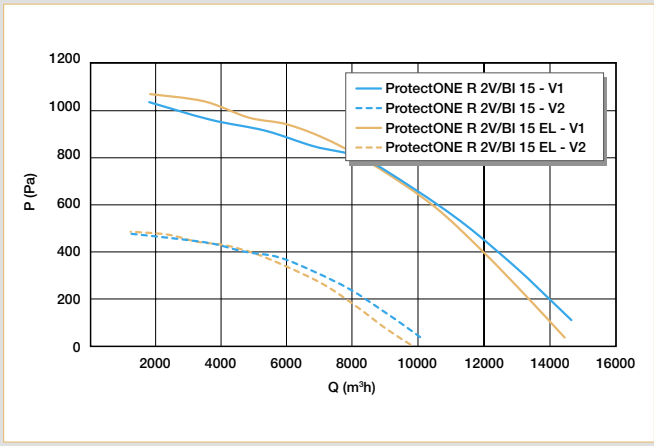

ProtectONE® R 2V/BI 15.0

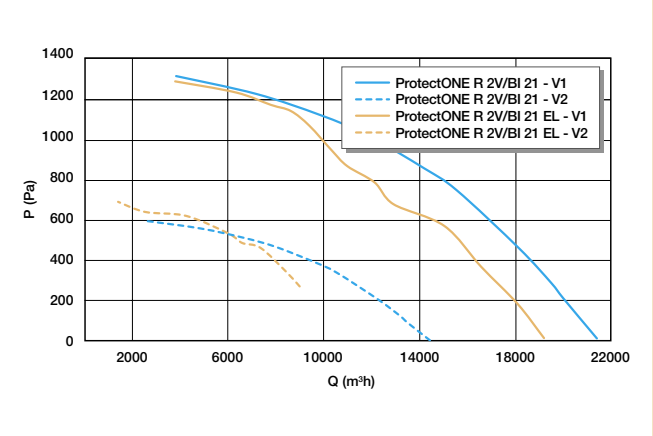

ProtectONE® R 2V/BI 21.0

ProtectONE® R 2V (2 speed)

ACCESSORIES

Designation	Reference	Discount family
Rain hood + mesh T1 ProtectONE®	11039160	08
Rain hood + mesh T2 ProtectONE®	11039161	08
Rain hood + mesh T3 ProtectONE®	11039162	08
Discharge flange T1 ProtectONE®	11039163	08
Discharge flange T2 ProtectONE®	11039164	08
Discharge flange T3 ProtectONE®	11039165	08
Rectangular/circular adapter piece for air intake T1 ProtectONE® 90°	11039166	08
Rectangular/circular adapter piece for air intake T2 ProtectONE® 90°	11039167	08
Rectangular/circular adapter piece for air intake T3 ProtectONE® 90°	11039168	08
Rectangular/circular adapter piece for air intake T1 ProtectONE® EL	11039169	08
Rectangular/circular adapter piece for air intake T2 ProtectONE® EL	11039170	08
Rectangular/circular adapter piece for air intake T3 ProtectONE® EL	11039171	08
Rectangular/circular adapter piece for discharge T1 ProtectONE®	11039172	08
Rectangular/circular adapter piece for discharge T2 ProtectONE®	11039173	08
Rectangular/circular adapter piece for discharge T3 ProtectONE®	11039174	08
Rectangular flexible sleeve for air intake T1 ProtectONE® 90°	11039175	08
Rectangular flexible sleeve for air intake T2 ProtectONE® 90°	11039176	08
Rectangular flexible sleeve for air intake T3 ProtectONE® 90°	11039177	08
Rectangular flexible sleeve for air intake T1 ProtectONE® EL	11039178	08
Rectangular flexible sleeve for air intake T2 ProtectONE® EL	11039179	08
Rectangular flexible sleeve for air intake T3 ProtectONE® EL	11039180	08
Rectangular flexible sleeve for discharge T1 ProtectONE®	11039181	08
Rectangular flexible sleeve for discharge T2 ProtectONE®	11039182	08
Rectangular flexible sleeve for discharge T3 ProtectONE®	11039183	08
Backdraft damper T1 ProtectONE® 90°	11039184	08
Backdraft damper T2 ProtectONE® 90°	11039185	08
Backdraft damper T3 ProtectONE® 90°	11039186	08
Backdraft damper T1 ProtectONE® EL	11039187	08
Backdraft damper T2 ProtectONE® EL	11039188	08
Backdraft damper T3 ProtectONE® EL	11039189	08
Flexible sleeve Ø 500	11096940	22
Flexible sleeve Ø 630	11096942	22
Flexible sleeve Ø 710	11096930	22
Anti-vibration mounting - 6 parts	11039348	08
Pressure switch kit 20-300 Pa ProtectONE®	11091097	08
AXONE-1 V/DES- 3P 4.7A +IPDP 20-300 PA	11090646	08
AXONE-1 V/DES- 3P 16.7A +IPDP 20-300 PA	11090647	08
AXONE-2V/DES-DAH 16.7+ IPDP 20-300/100-1000 PA	11090666	08
AXONE-2V/DES-BI 16.7+ IPDP 20-300/100-1000 PA	11090676	08

OPTIONS

	90° model			EL model		
	R2.0 / R4.0 / R5.0	R6.5 / R8.0 / R9.0	R10 / R12 / R15 / R21	R2.0 / R4.0 / R5.0	R6.5 / R8.0 / R9.0	R10 / R12 / R15 / R21
Pressure switch	☑					
All-in-One (Relay box, proximity swith and pressure switch included)	☑					
Rain hood / Bird mesh sleeve	☑	☑	☑	☑	☑	☑
Discharge connection flange	☑	☑	☑	☑	☑	☑
Left/right discharge	-	-	-	-	-	-

Notes

Smoke and heat exhaust fans

ProtectONE® T smoke and heat exhaust box fans

Presentation of ProtectONE® T range

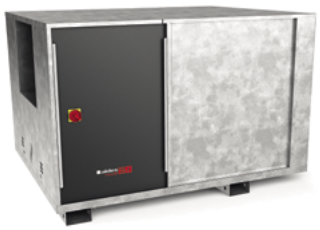

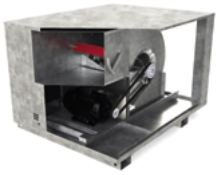

Exploded view with ProtectONE® Adapt adjustment device

PRODUCT ADVANTAGES

- *Easily adjusted airflow with the exclusive ProtectONE® Adapt system.*
- *Thermal insulation for installation in technical room.*
- *Can be fully dismantled as standard.*
- *Motor access panel can be modified on site.*

COMPLIANCE

- *Compliant with markings CE: 1812-CPR-1548.*
- *Certified EFECTIS F400-120 as per EN 12101-3.*
- *TR model (backward curve impeller) compliant with ErP 2018.*
- *Safety box compliant with NF S61-937-1, NF S61937-9, NF 537.*

DESCRIPTION

- ALDES exclusive: ProtectONE® Adapt high-speed airflow adjustment device built into the box fan (optional).
- Belt-driven exhaust box fan.
- 2 impeller types: forward curve, backward curve:
  - ProtectONE® TA (forward curve): 9 box fan sizes, airflow 1,000 to 40,000 m³/h.
  - ProtectONE® TR (backward curve): 8 box fan sizes, airflow 1,000 to 35,000 m³/h.
- Single-speed motorisation, two-speed independent windings or Dahlander.
- Series, galvanised steel dismountable as standard.
- Motor access panel can be modified on site.
- Factory-fitted proximity switch.

SCOPE

- Smoke and hot gas exhaust in case of fire in all non-residential buildings.
- Stale air exhaust in non-residential and industrial buildings (ProtectONE® TR).
- Pollutant exhaust in professional kitchens (ProtectONE® TR).

INSTALLATION

- Can be installed indoor or outdoor.
- Indoor installation: requires the thermo-acoustic insulation option (EN 12101-3).
- Outdoor installation: requires a rain hood + grille.
- Proximity switch delivered fitted and wired with position contacts.

ACCESSORIES

- Square/circular plate adapter for air intake.
- Rain hood with bird protection on discharge outlet.
- Rectangular and circular flexible sleeve.
- Rectangular/circular flexible adapter on discharge outlet
- Anti-vibration pads.
- Non-return damper (saves energy by preventing cold outdoor air from entering in smoke and heat exhaust ducts).
- Rain hood + grille (horizontal discharge).
- Discharge flange.
- AXONE 1 V safety box, 1 V gradual starting.
- AXONE 2 V safety box, smoke and heat exhaust and smoke and heat exhaust+comfort.

AVAILABLE OPTIONS

- All-in-one solution: safety box + switch + pressure switch fitted and wired in factory. Saves time on wiring, operational guarantee and simplified commissioning on site.
- Second pressure switch (for two-speed smoke and heat exhaust).
- Choice of motor access panel.
- Horizontal or vertical discharge.
- Thermal and acoustic insulation, 12010-3-approved, for installation in technical room.
- Variable pulley.
- ProtectONE® Adapt: rapid airflow adjustment.

PRESENTATION OF ACCESSORIES RANGE

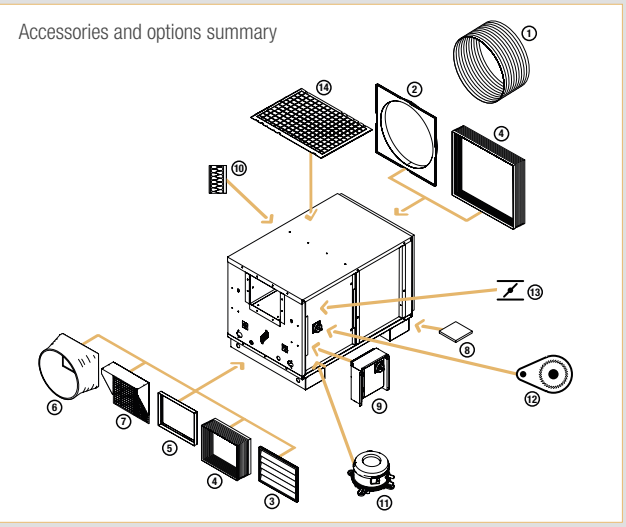

1- Circular flexible sleeve. 2- Rectangular/circular inlet adapter. 3- Non-return damper. 4- Rectangular flexible sleeve. 5- Discharge connection flange. 6- Rectangular/circular outlet adapter. 7- Rain hood and bird grill. 8- Anti-vibration pads. 9- Safety box. 10- Thermal and acoustic insulation. 11- Pressure switch. 12- Variable pulley. 13- ProtectONE® Adapt. 14- Vertical discharge grill.

SELECTION OF ACCESS PANEL AND TRANSMISSION POSITIONING (TOP VIEW)

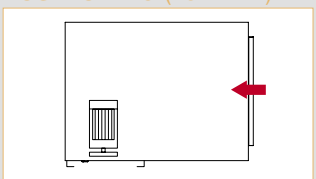

Standard access panel:
to the left of the inlet eye

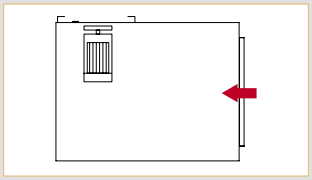

Optional access panel:
to the right of the inlet eye

Smoke and heat exhaust fans

ProtectONE® T smoke and heat exhaust box fans

ProtectONE® TA 1-speed

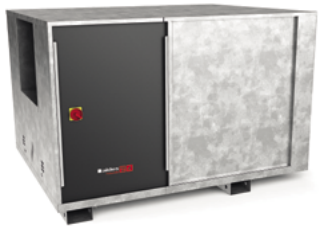

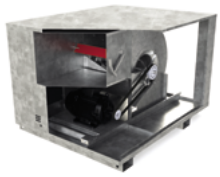

Exploded view with ProtectONE® Adapt adapter

PRODUCT ADVANTAGES

- *Easily adjusted airflow with the exclusive ProtectONE® Adapt system.*
- *Can be fully dismantled as standard.*
- *Thermal insulation for technical rooms.*

COMPLIANCE

- *Compliant with markings CE: 1812-CPR-1548.*
- *Certified EFECTIS F400-120 as per EN 12101-3.*
- *Safety box compliant with NF S61-937-1, NF S61937-9, NF 537.*

RANGE WITH CHOICE OF OPTIONS*

Description	Reference	Discount family
ProtectONE® TA 1 speed		
ProtectONE® TA 225 2.2 kW	11039501	08
ProtectONE® TA 225 1.5 kW		
ProtectONE® TA 225 1.1 kW		
ProtectONE® TA 250 3 kW	11039502	08
ProtectONE® TA 250 2.2 kW		
ProtectONE® TA 250 1.5 kW		
ProtectONE® TA 250 1.1 kW		
ProtectONE® TA 280 4 kW	11039503	08
ProtectONE® TA 280 3 kW		
ProtectONE® TA 280 2.2 kW		
ProtectONE® TA 315 5.5 kW	11039504	08
ProtectONE® TA 315 4 kW		
ProtectONE® TA 315 3 kW		
ProtectONE® TA 355 7.5 kW	11039505	08
ProtectONE® TA 355 5.5 kW		
ProtectONE® TA 355 4 kW		
ProtectONE® TA 355 3 kW		
ProtectONE® TA 355 2.2 kW		
ProtectONE® TA 400 11 kW	11039506	08
ProtectONE® TA 400 7.5 kW		
ProtectONE® TA 400 5.5 kW		
ProtectONE® TA 400 4 kW		
ProtectONE® TA 450 15 kW	11039507	08
ProtectONE® TA 450 11 kW		
ProtectONE® TA 450 7.5 kW		
ProtectONE® TA 450 5.5 kW		
ProtectONE® TA 500 15 kW	11039508	08
ProtectONE® TA 500 11 kW		
ProtectONE® TA 500 7.5 kW		
ProtectONE® TA 500 5.5 kW		
ProtectONE® TA 560 22 kW	11039509	08
ProtectONE® TA 560 15 kW		
ProtectONE® TA 560 11 kW		
ProtectONE® TA 560 7.5 kW		

* For options, see ProtectONE Accessories Pages.

DESCRIPTION

- Airflow adjustment device built into the box fan: ProtectONE® Adapt, exclusive to ALDES (option).
- 9 box fan models for airflow of 1,000 to 40,000 m³/h.
- One-speed motorisations 1.1 kW to 22 kW.
- Galvanised steel box fan.
- Balanced forward curve impeller.
- Class F IP54 electric motor.

DIMENSIONS (mm) / WEIGHT (KG)

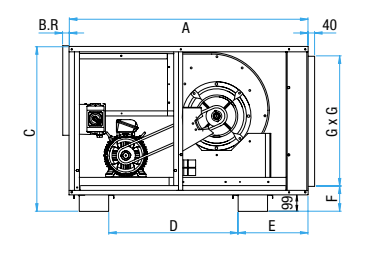

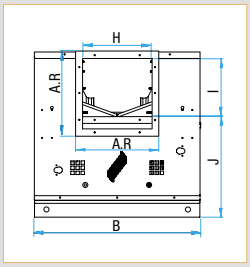

Top view

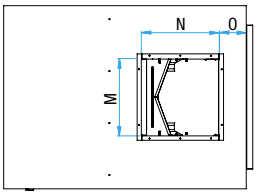

								Horizontal discharge			Vertical discharge			Discharge flange.		Weight box fan (kg)*
Type	A	B	C	D	E	F	GxG	H	I	J	M	N	O	AR	BR	
225	1047	712	757	619	214	153	550	290	242	474	288	288	141	350	43	102
250	1152	792	791	619	319	145	600	324	269	481	322	322	160	400	43	128
280	1257	872	871	619	424	135	700	363	302	528	361	361	170	450	43	193
315	1362	972	971	794	325	135	800	406	339	591	404	404	172	500	43	205
355	1467	1092	1011	794	430	155	800	455	382	588	453	453	163	550	43	227
400	1608	1213	1141	954	411	145	950	509	431	669	507	507	180	600	43	337
450	1758	1373	1211	954	561	155	1000	571	485	685	569	569	200	650	43	404
500	1918	1503	1281	1034	641	140	1100	640	538	702	638	638	227	700	43	435
560	2093	1683	1381	1114	736	140	1200	717	603	737	715	715	248	800	43	563

*With max. motorisation and without option.

ELECTRICAL CHARACTERISTICS

Type of motor	Poles	U (V)	P (kW)	In (A)	I max (A)	Id/In
1-speed motor						
1.1kW 1 speed 2P	2P	400 V	1.1	2.3	2.6	6.5
1.5kW 1 speed 2P			1.5	3.2	3.5	7
2.2kW 1 speed 2P			2.2	4.6	5.0	6.6
2.2kW 1 speed 4P	4P	400 V	2.2	4.6	5.1	7
3kW 1 speed 4P			3	6.2	6.8	6.5
4kW 1 speed 4P			4	8.3	9.2	6.6
5.5kW 1 speed 4P			5.5	10.5	11.6	7.3
7.5kW 1 speed 4P			7.5	14.8	16.3	7.8
11kW 1 speed 4P			11	21.3	32.8	6.4
15kW 1 speed 4P			15	29.8	32.8	6.1
22kW 1 speed 4P			22	41.3	45.4	8

ProtectONE® TA 1-speed

- **Curves as per NF EN ISO 5801 - assembly C:**
  connected inlet, free exhaust.
- Ptot: Total pressure
- Pd asp. : dynamic pressure in duct at inlet
- ΔP connected dyn.: gain in pressure with connected discharge

- **Connected discharge box fan:**
  DP network (upstream + downstream) = Ptot - ΔP connected dyn.
  example with Q = 4230 m³/h.
- DP network (downstream + upstream) = 300 Pa
- ΔP connected dyn. = 120 PA
- P box fan = 300 -120= 180 Pa

> ProtectONE® TA 225 B 1.5 kW

- **Free discharge box fan:**
  example with Q = 4320 m³/h.
  DP network (downstream + upstream) = 300 Pa
- P box fan = 300 Pa

> ProtectONE® TA 225 A 2.2 kW

AIRFLOW DETAILS

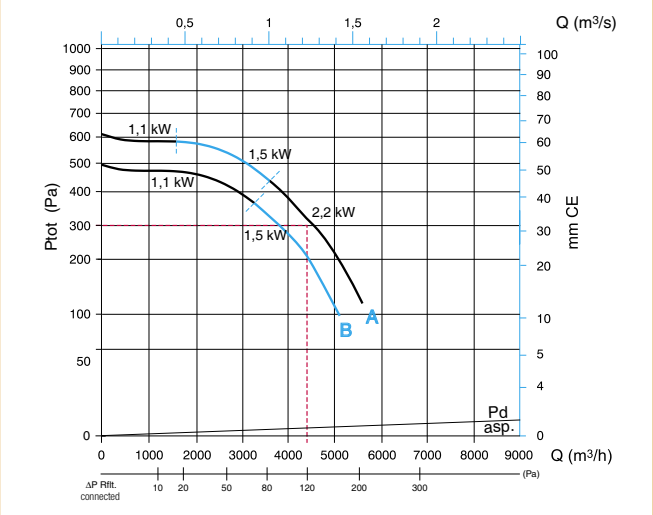

ProtectONE® TA 225 - 1-speed

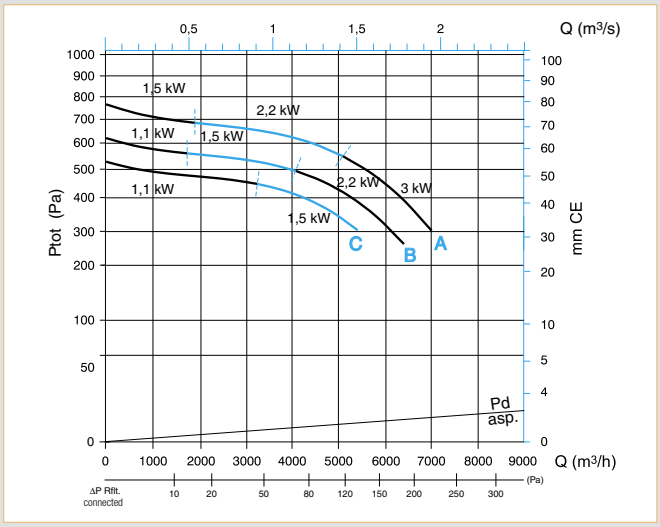

ProtectONE® TA 250 - 1-speed

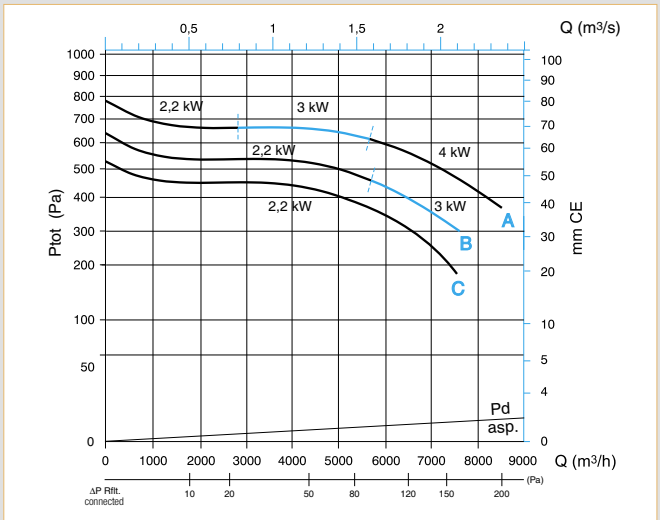

ProtectONE® TA 280 - 1-speed

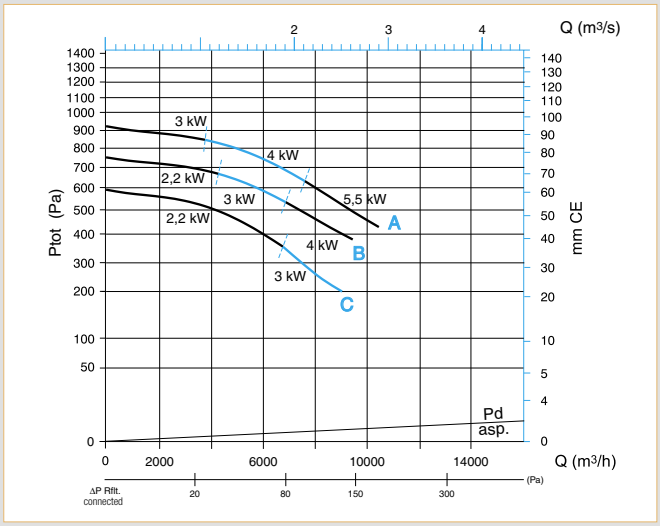

ProtectONE® TA 315 - 1-speed

ProtectONE® TA 1-speed

AIRFLOW DETAILS

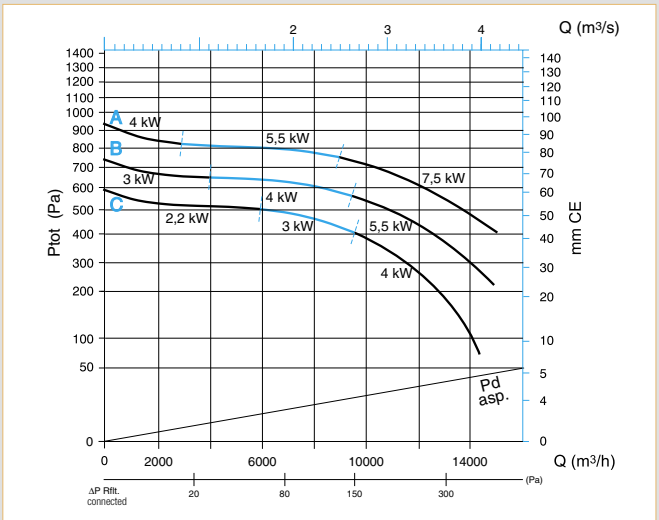

ProtectONE® TA 355 - 1-speed

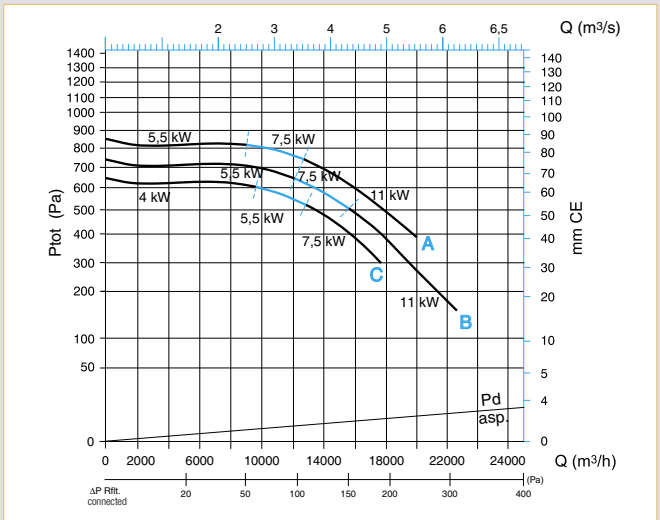

ProtectONE® TA 400 - 1-speed

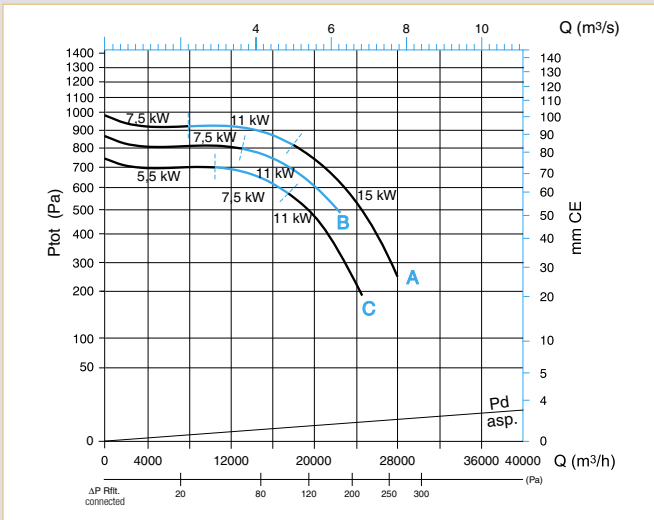

ProtectONE® TA 450 - 1-speed

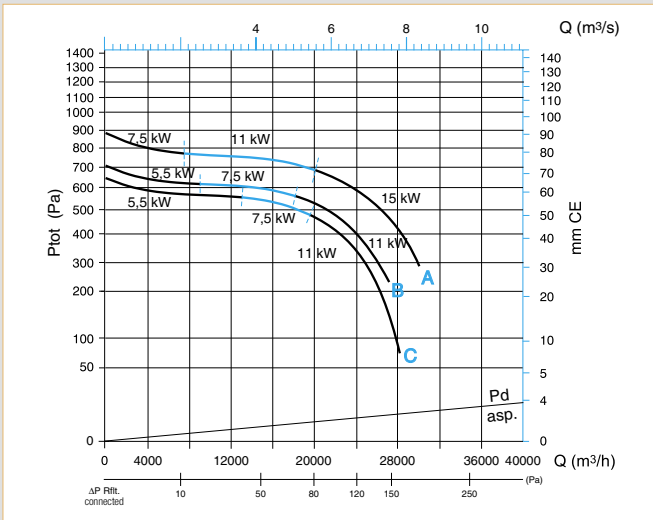

ProtectONE® TA 500 - 1-speed

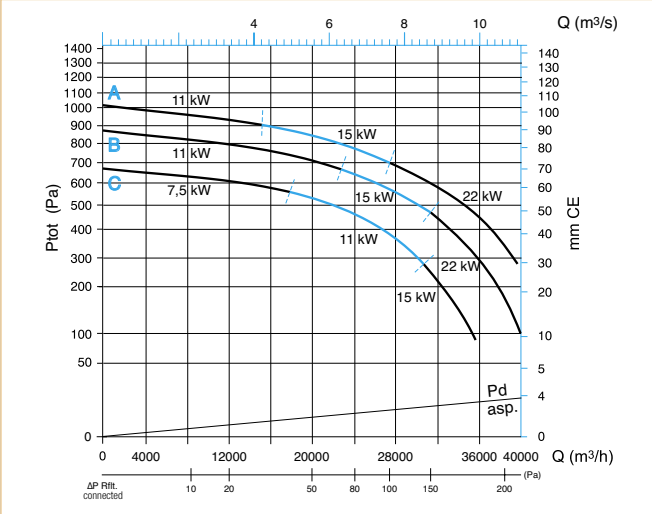

ProtectONE® TA 560 - 1-speed

Smoke and heat exhaust fans

ProtectONE® T smoke and heat exhaust box fans

ProtectONE® TA 2-speed - Independent windings (BI)

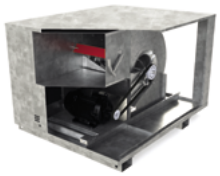

Exploded view with ProtectONE® Adapt adapter

PRODUCT ADVANTAGES

- *Easily adjusted airflow with the exclusive ProtectONE® Adapt system.*
- *Can be fully dismantled as standard.*
- *Thermal insulation for technical rooms.*

COMPLIANCE

- *Compliant with markings CE: 1812-CPR-1548.*
- *Certified EFECTIS F400-120 as per EN 12101-3.*
- *Safety box compliant with NF S61-937-1, NF S61937-9, NF 537.*

RANGE WITH CHOICE OF OPTIONS*

Description	Reference	Discount family
ProtectONE® TA 2-speed independent windings		
ProtectONE® TA 225 2-speed BI 2.2/0.7 kW	110395210	08
ProtectONE® TA 225 2-speed BI 1.5/0.37 kW		
ProtectONE® TA 225 2-speed BI 1.1/0.3 kW		
ProtectONE® TA 250 2-speed BI 3/1 kW	11039522	08
ProtectONE® TA 250 2-speed BI 2.2/0.7 kW		
ProtectONE® TA 250 2-speed BI 1.5/0.37 kW		
ProtectONE® TA 280 2-speed BI 4/1.5 kW	11039523	08
ProtectONE® TA 280 2-speed BI 3/1 kW		
ProtectONE® TA 280 2-speed BI 2.2/0.7 kW		
ProtectONE® TA 315 2-speed BI 6/2.2 kW	11039524	08
ProtectONE® TA 315 2-speed BI 4/1.5 kW		
ProtectONE® TA 315 2-speed BI 3/1 kW		
ProtectONE® TA 355 2-speed BI 6/2.2 kW	11039525	08
ProtectONE® TA 355 2-speed BI 4/1.5 kW		
ProtectONE® TA 355 2-speed BI 3/1 kW		
ProtectONE® TA 355 2-speed BI 2.2/0.7 kW		
ProtectONE® TA 400 2-speed BI 10/3.3 kW	11039526	08
ProtectONE® TA 400 2-speed BI 6/2.2 kW		
ProtectONE® TA 400 2-speed BI 4/1.5 kW		
ProtectONE® TA 400 2-speed BI 3/1 kW		
ProtectONE® TA 450 2-speed BI 14/4.5 kW	11039527	08
ProtectONE® TA 450 2-speed BI 10/3.3 kW		
ProtectONE® TA 450 2-speed BI 6/2.2 kW		
ProtectONE® TA 500 2-speed BI 14/4.5 kW	11039528	08
ProtectONE® TA 500 2-speed BI 10/3.3 kW		
ProtectONE® TA 500 2-speed BI 6/2.2 kW		
ProtectONE® TA 560 2-speed BI 20/8.5 kW	11039529	08
ProtectONE® TA 560 2-speed BI 14/4.5 kW		
ProtectONE® TA 560 2-speed BI 10/3.3 kW		
ProtectONE® TA 560 2-speed BI 6/2.2 kW		

* For options, see ProtectONE Accessories Pages.

DESCRIPTION

- Airflow adjustment device built into the box fan: ProtectONE® Adapt, exclusive to ALDES (optional).
- 9 box fan models for airflow of 1,000 to 40,000 m³/h.
- 2-speed motorisations independent windings 1.1 kW to 20 kW.
- Galvanised steel box fan.
- Balanced forward curve impeller.
- Class F IP54 electric motor.

DIMENSIONS (mm) / WEIGHT (KG)

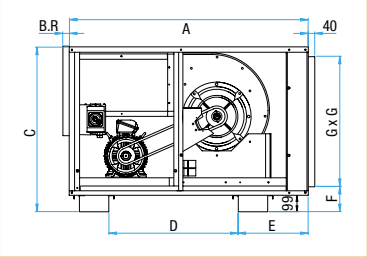

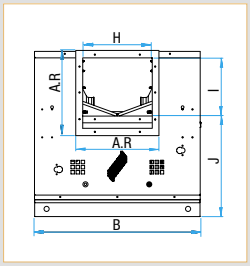

Top view

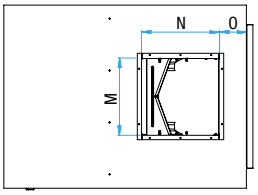

								Horizontal discharge			Vertical discharge			Discharge flange.		Weight box fan (kg)*
Type	A	B	C	D	E	F	GxG	H	I	J	M	N	O	AR	BR	
225	1047	712	757	619	214	153	550	290	242	474	288	288	141	350	43	102
250	1152	792	791	619	319	145	600	324	269	481	322	322	160	400	43	128
280	1257	872	871	619	424	135	700	363	302	528	361	361	170	450	43	193
315	1362	972	971	794	325	135	800	406	339	591	404	404	172	500	43	205
355	1467	1092	1011	794	430	155	800	455	382	588	453	453	163	550	43	227
400	1608	1213	1141	954	411	145	950	509	431	669	507	507	180	600	43	337
450	1758	1373	1211	954	561	155	1000	571	485	685	569	569	200	650	43	404
500	1918	1503	1281	1034	641	140	1100	640	538	702	638	638	227	700	43	435
560	2093	1683	1381	1114	736	140	1200	717	603	737	715	715	248	800	43	563

*With max. motorisation and without option.

ELECTRICAL CHARACTERISTICS

Type of motor	Poles	U (V)	P (kW)	In (A)	I max (A)	Id/In
Motor - 2-speed independent windings						
1.1/0.3kW BI 4/6P	4/6P	400 V	1.1/0.3	2.92/1.51	3.21/1.66	5.4/5.1
1.5/0.37kW BI 4/6P			1.5/0.37	3.65/1.62	4.01/1.78	5.5/4.5
2.2/0.7kW BI 4/6P			2.2/0.7	5.03/2.48	5.53/2.72	6/5.5
3/1kW BI 4/6P			3/1	6.85/3.44	7.53/3.78	7.6/6.2
4/1.5kW BI 4/6P			4/1.5	9.1/4.57	10.01/5.02	7.1/5.9
6/2.2kW BI 4/6P			6/2.2	13.5/6.96	14.85/7.65	7.8/7.4
10/3.3kW BI 4/6P			10/3.3	22/8.74	24.2/9.61	7/4
14/4.5kW BI 4/6P			14/4.5	29.5/11.2	32.45/12.32	8.5/4.5
20/8.5kW BI 4/6P			20/8.5	36/17.6	39.6/19.36	9/7

ProtectONE® TA 2-speed - Independent windings (BI)

AIRFLOW DETAILS

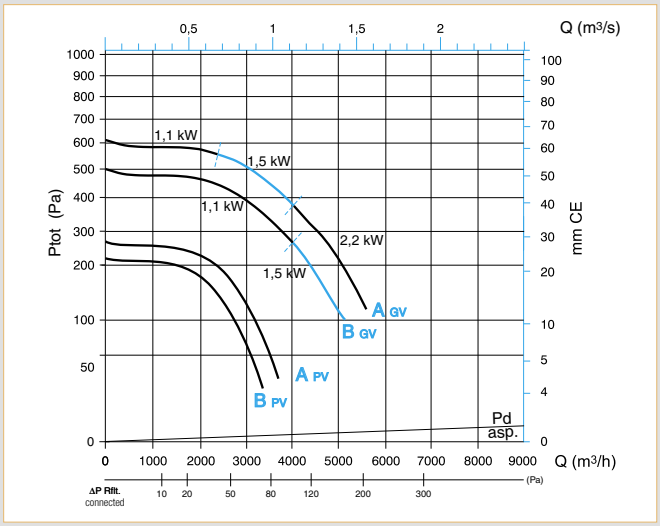

ProtectONE® TA 225 - 2-speed - BI

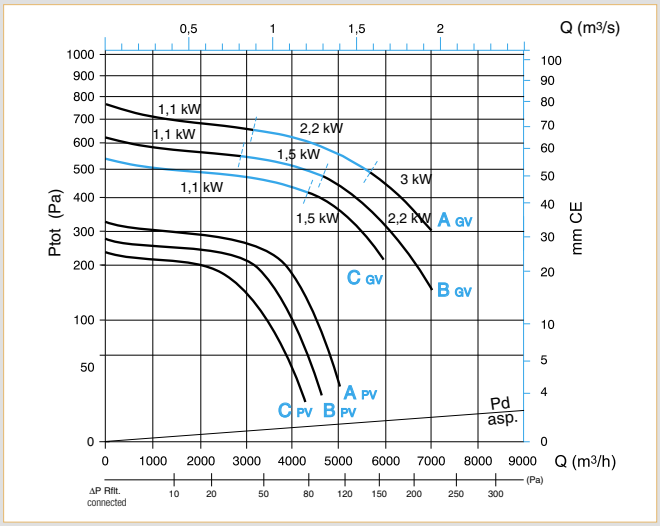

ProtectONE® TA 250 - 2-speed - BI

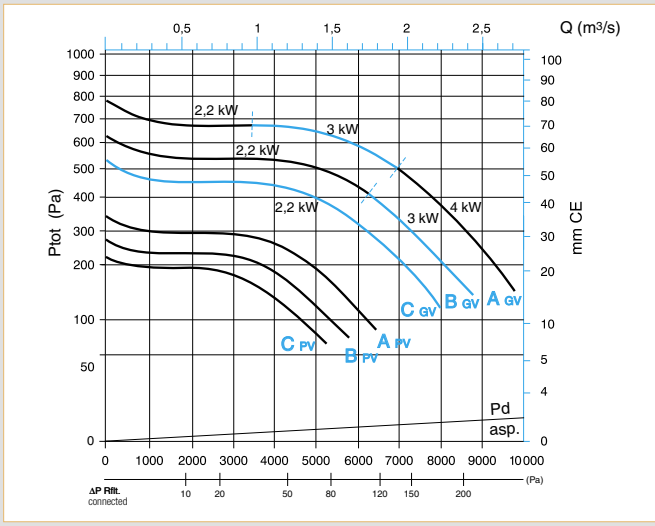

ProtectONE® TA 280 - 2-speed - BI

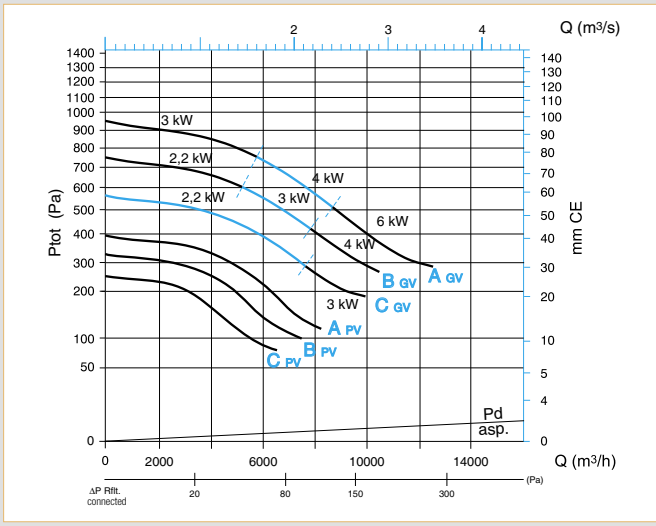

ProtectONE® TA 315 - 2-speed - BI

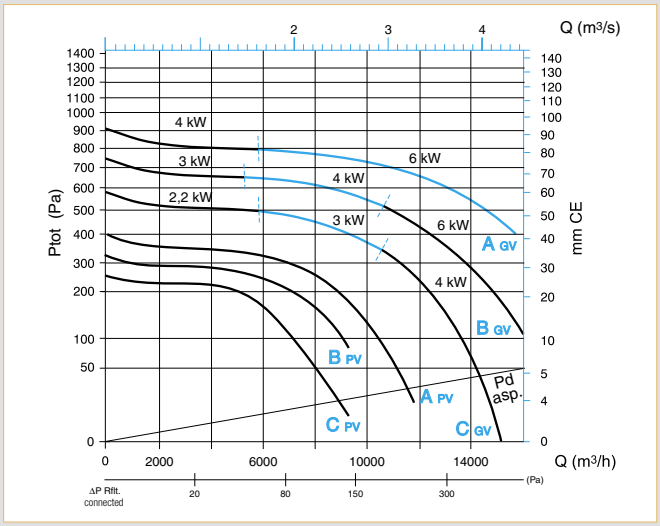

ProtectONE® TA 355 - 2-speed - BI

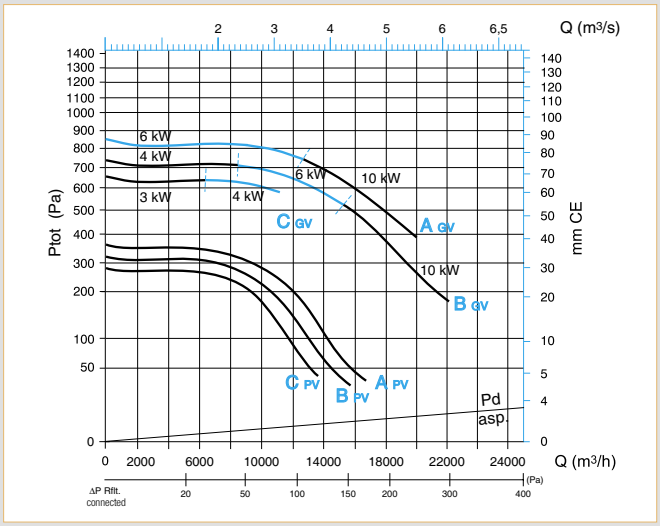

ProtectONE® TA 400 - 2-speed - BI

ProtectONE® TA 2-speed - Independent windings (BI)

AIRFLOW DETAILS

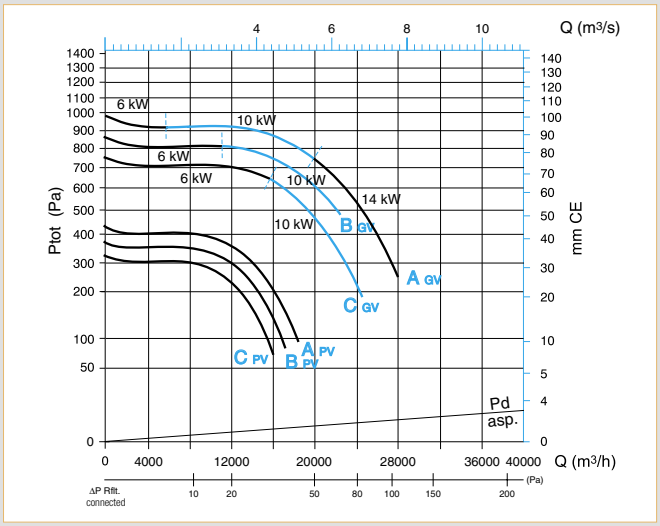

ProtectONE® TA 450 - 2-speed - BI

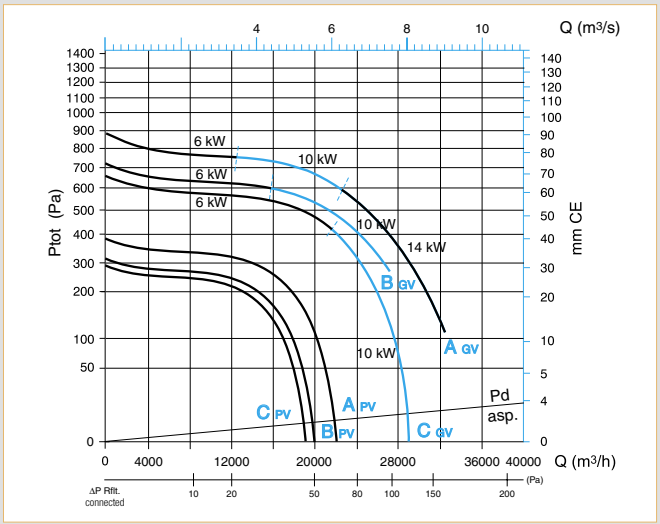

ProtectONE® TA 500 - 2-speed - BI

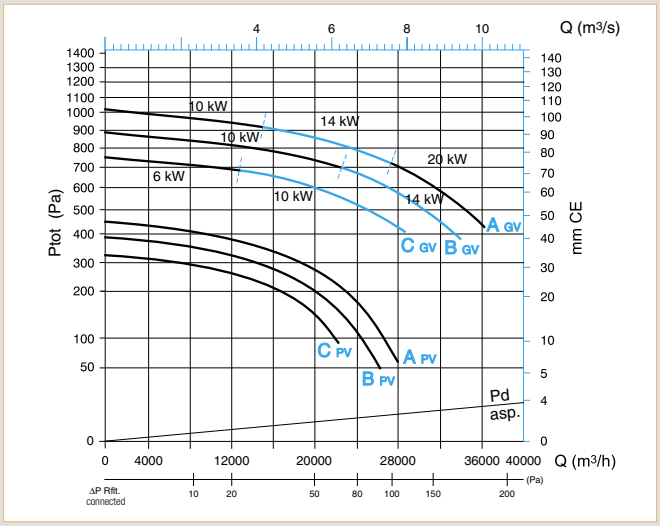

ProtectONE® TA 560 - 2-speed - BI

Smoke and heat exhaust fans

ProtectONE® T smoke and heat exhaust box fans

ProtectONE® TA 2-speed - Dahlander

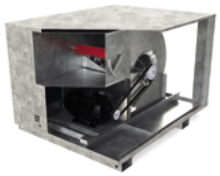

Exploded view with ProtectONE® Adapt adapter

PRODUCT ADVANTAGES

- *Easily adjusted airflow with the exclusive ProtectONE® Adapt system.*
- *Can be fully dismantled as standard.*
- *Thermal insulation for technical rooms.*

COMPLIANCE

- *Compliant with markings CE: 1812-CPR-1548.*
- *Certified EFECTIS F400-120 as per EN 12101-3.*
- *Safety box compliant with NF S61-937-1, NF S61937-9, NF 537.*

RANGE WITH CHOICE OF OPTIONS*

Description	Reference	Discount family
ProtectONE® TA 2-speed Dahlander		
ProtectONE® TA 225 2-speed DAH 2.2/0.5 kW	11039511	*08*
ProtectONE® TA 225 2-speed DAH 1.5/0.37 kW		
ProtectONE® TA 250 2-speed DAH 3.1/0.8 kW	11039512	*08*
ProtectONE® TA 250 2-speed DAH 2.2/0.5 kW		
ProtectONE® TA 250 2-speed DAH 1.5/0.37 kW		
ProtectONE® TA 280 2-speed DAH 3.8/1 kW	11039513	*08*
ProtectONE® TA 280 2-speed DAH 2.8/0.7 kW		
ProtectONE® TA 280 2-speed DAH 2.2/0.55 kW		
ProtectONE® TA 315 2-speed DAH 5/1.3 kW	11039514	*08*
ProtectONE® TA 315 2-speed DAH 3.8/1 kW		
ProtectONE® TA 315 2-speed DAH 2.8/0.7 kW		
ProtectONE® TA 355 2-speed DAH 7.2/1.8 kW	11039515	*08*
ProtectONE® TA 355 2-speed DAH 5/1.3 kW		
ProtectONE® TA 355 2-speed DAH 3.8/1 kW		
ProtectONE® TA 355 2-speed DAH 2.8/0.7 kW		
ProtectONE® TA 355 2-speed DAH 2.2/0.55 kW		
ProtectONE® TA 400 2-speed DAH 11/3 kW	11039516	*08*
ProtectONE® TA 400 2-speed DAH 7.2/1.8 kW		
ProtectONE® TA 400 2-speed DAH 5/1.3 kW		
ProtectONE® TA 400 2-speed DAH 3.8/1 kW		
ProtectONE® TA 450 2-speed DAH 14/3.5 kW	11039517	*08*
ProtectONE® TA 450 2-speed DAH 11/3 kW		
ProtectONE® TA 450 2-speed DAH 7.2/1.8 kW		
ProtectONE® TA 450 2-speed DAH 5/1.3 kW		
ProtectONE® TA 500 2-speed DAH 14/3.5 kW	11039518	*08*
ProtectONE® TA 500 2-speed DAH 11/3 kW		
ProtectONE® TA 500 2-speed DAH 7.2/1.8 kW		
ProtectONE® TA 500 2-speed DAH 5/1.3 kW		
ProtectONE® TA 560 2-speed DAH 20/5 kW	11039519	*08*
ProtectONE® TA 560 2-speed DAH 14/3.5 kW		
ProtectONE® TA 560 2-speed DAH 11/3 kW		
ProtectONE® TA 560 2-speed DAH 7.2/1.8 kW		

* For options, see ProtectONE Accessories Pages.

DESCRIPTION

- Airflow adjustment device built into the box fan: ProtectONE® Adapt, exclusive to ALDES (optional).
- 9 box fan models for airflow of 1,000 to 40,000 m³/h.
- 2-speed motorisations Dahlander 1.5 kW to 20 kW.
- Galvanised steel box fan.
- Balanced forward curve impeller.
- Class F IP54 electric motor.

DIMENSIONS (mm) / WEIGHT (Kg)

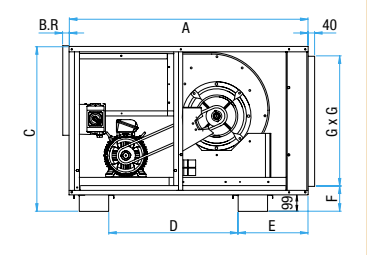

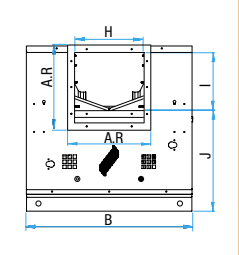

Top view

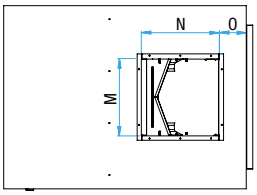

								Horizontal discharge			Vertical discharge			Discharge flange.		Weight box fan (kg)*
Type	A	B	C	D	E	F	GxG	H	I	J	M	N	O	AR	BR	
225	1047	712	757	619	214	153	550	290	242	474	288	288	141	350	43	102
250	1152	792	791	619	319	145	600	324	269	481	322	322	160	400	43	128
280	1257	872	871	619	424	135	700	363	302	528	361	361	170	450	43	193
315	1362	972	971	794	325	135	800	406	339	591	404	404	172	500	43	205
355	1467	1092	1011	794	430	155	800	455	382	588	453	453	163	550	43	227
400	1608	1213	1141	954	411	145	950	509	431	669	507	507	180	600	43	337
450	1758	1373	1211	954	561	155	1000	571	485	685	569	569	200	650	43	404
500	1918	1503	1281	1034	641	140	1100	640	538	702	638	638	227	700	43	435
560	2093	1683	1381	1114	736	140	1200	717	603	737	715	715	248	800	43	563

*With max. motorisation and without option.

ELECTRICAL CHARACTERISTICS

Type of motor	Poles	U (V)	P (kW)	In (A)	I max (A)	Id/In
2 speed motor Dahlander						
1.5/0.37kW DAH 2/4P	2/4	400 V	1.5/0.37	3.54/1.25	3.89/1.37	6.5/4.5
2.2/0.5kW DAH 2/4P			2.2/0.5	4.63/1.54	5.09/1.69	6/4
3.1/0.8kW DAH 2/4P			3.1/0.8	6.2/1.99	6.82/2.18	7.2/4.6
2.2/0.55kW DAH 4/8P	4/8	400 V	2.2/0.55	4.84/2	5.32/2.2	6.9/3.5
2.8/0.7kW DAH 4/8P			2.8/0.7	6.01/2.41	6.61/2.65	6/3.6
3.8/1kW DAH 4/8P			3.8/1	9.25/2.75	10.17/3.02	7/4
5/1.3kW DAH 4/8P			5/1.3	10.9/3.83	11.99/4.21	9.2/5.5
7.2/1.8kW DAH 4/8P			7.2/1.8	16.5/5.06	18.15/5.56	7.9/4.2
11/3kW DAH 4/8P			11/3	21/7	23.1/7.7	7/4.3
14/3.5kW DAH 4/8P			14/3.5	27/8.23	29.7/9.05	7.2/4.2
20/5kW DAH 4/8P			20/5	38.6/14.1	42.46/15.51	8.8/5.1

ProtectONE® TA 2-speed - Dahlander

AIRFLOW DETAILS

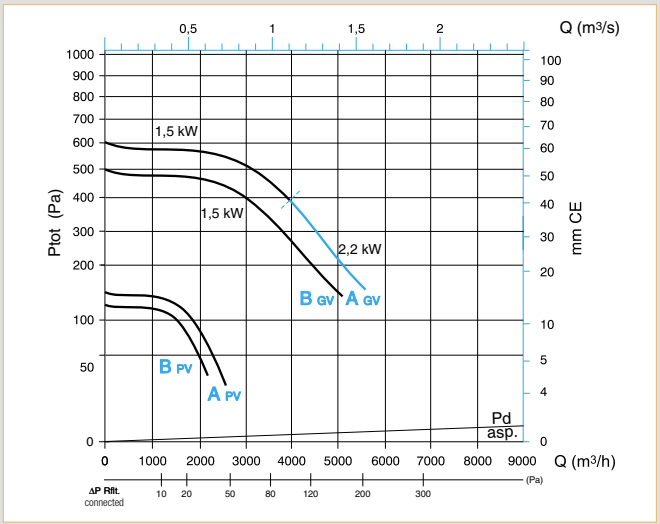

ProtectONE® TA 225 - 2-speed - Dahlander

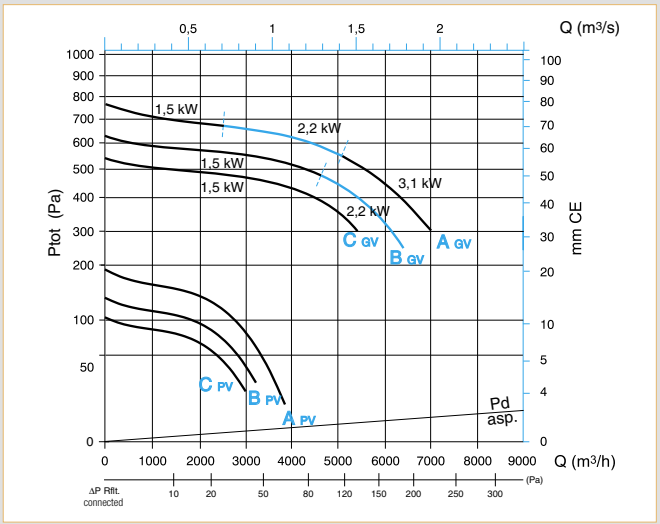

ProtectONE® TA 250 - 2-speed - Dahlander

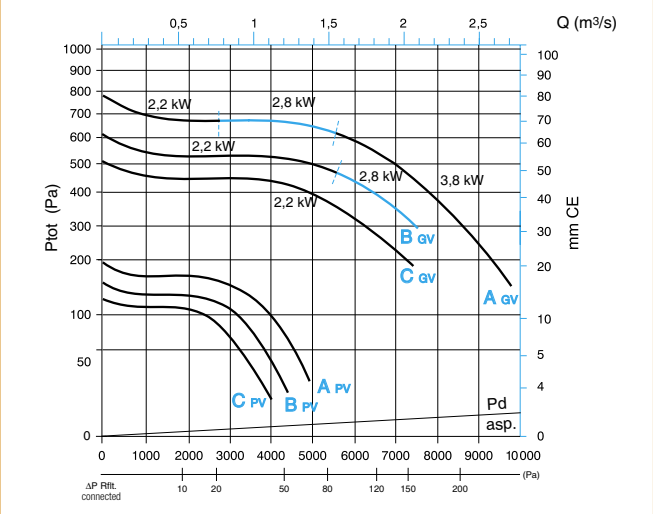

ProtectONE® TA 280 - 2-speed - Dahlander

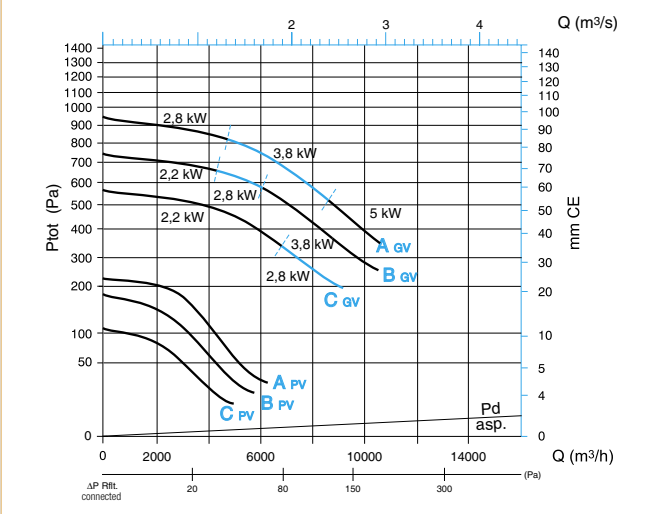

ProtectONE® TA 315 - 2-speed - Dahlander

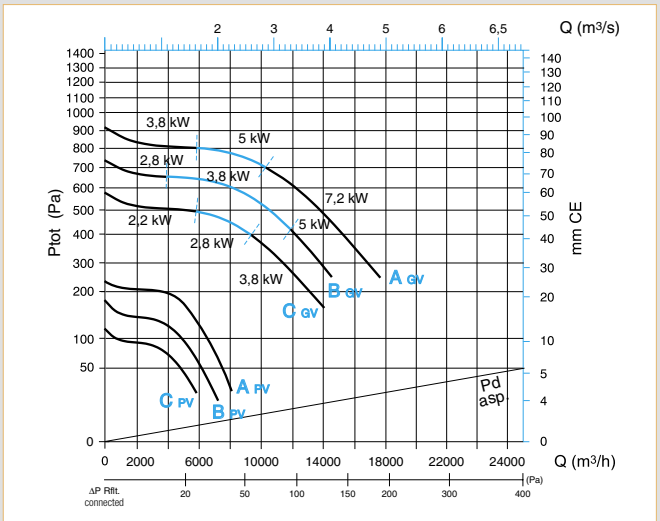

ProtectONE® TA 355 - 2-speed - Dahlander

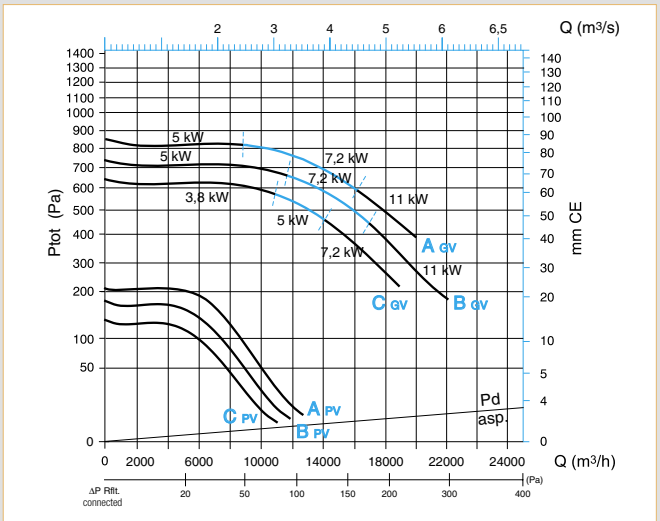

ProtectONE® TA 400 - 2-speed - Dahlander

ProtectONE® TA 2-speed - Dahlander

AIRFLOW DETAILS

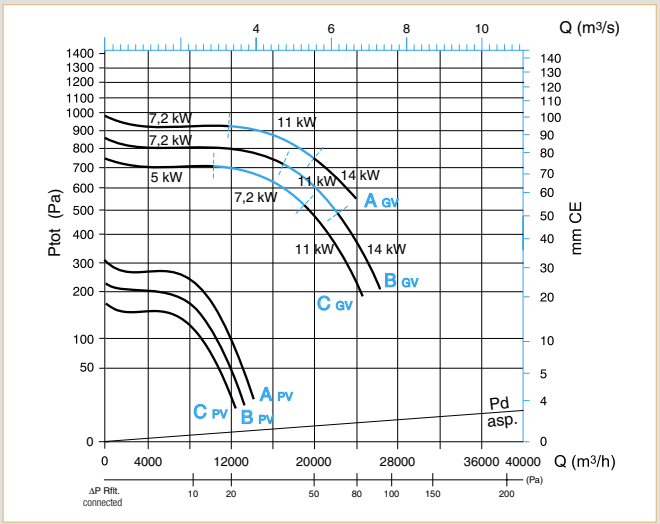

ProtectONE® TA 450 - 2-speed - Dahlander

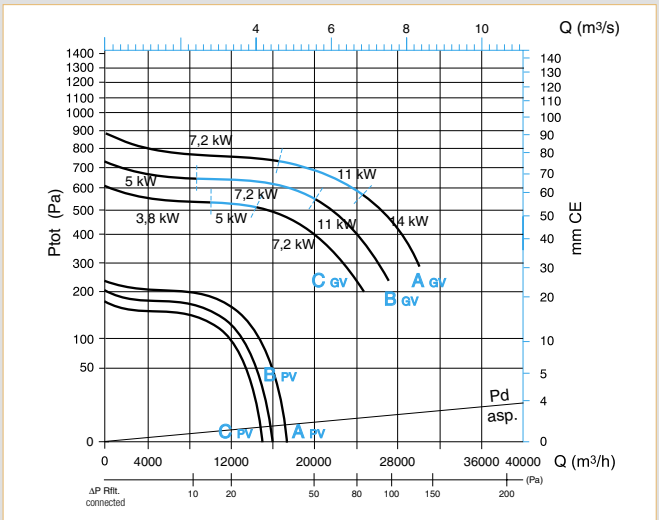

ProtectONE® TA 500 - 2-speed - Dahlander

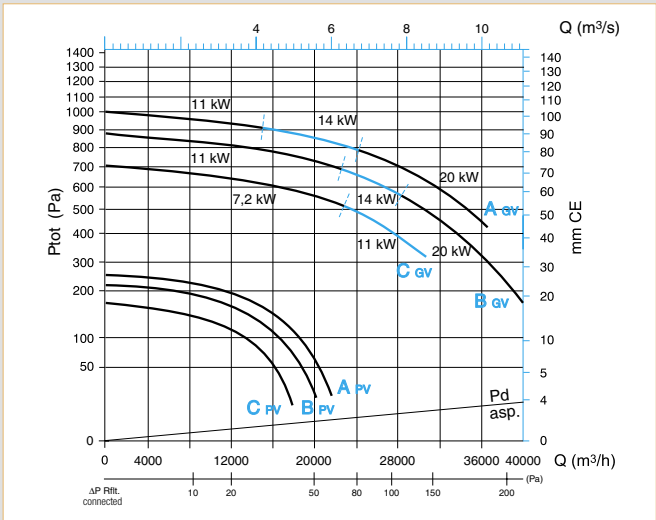

ProtectONE® TA 560 - 2-speed - Dahlander

Smoke and heat exhaust fans

ProtectONE® T smoke and heat exhaust box fans

ProtectONE® TR 1-speed

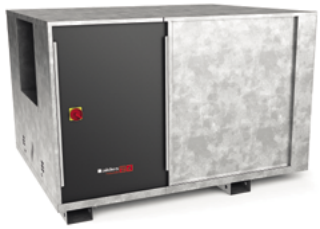

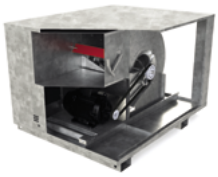

Exploded view with ProtectONE® Adapt adapter

PRODUCT ADVANTAGES

- *Easily adjusted airflow with the exclusive ProtectONE® Adapt system.*
- *Can be fully dismantled as standard.*
- *Thermal insulation for technical rooms.*
- *The backward curve impeller produces better results through smaller variation in airflow if pressure loss values vary.*

COMPLIANCE

- *Compliant with markings CE: 1812-CPR-1548.*
- *Certified EFECTIS F400-120 as per EN 12101-3.*
- *Safety box compliant with NF S61-937-1, NF S61937-9, NF 537.*
- *ErP-compliant.*

RANGE WITH CHOICE OF OPTIONS*

Description	Reference	Discount family
ProtectONE® TR 1-speed		
ProtectONE® TA 250 3 kW	11039532	**08**
ProtectONE® TA 250 2.2 kW		
ProtectONE® TA 250 1.5 kW		
ProtectONE® TA 280 4 kW	11039533	**08**
ProtectONE® TA 280 3 kW		
ProtectONE® TA 280 2.2 kW		
ProtectONE® TA 315 5.5 kW	11039534	**08**
ProtectONE® TA 315 4 kW		
ProtectONE® TA 315 3 kW		
ProtectONE® TA 355 7.5 kW	11039535	**08**
ProtectONE® TA 355 5.5 kW		
ProtectONE® TA 355 4 kW		
ProtectONE® TA 400 11 kW	11039536	**08**
ProtectONE® TA 400 7.5 kW		
ProtectONE® TA 400 5.5 kW		
ProtectONE® TA 450 11 kW	11039537	**08**
ProtectONE® TA 450 7.5 kW		
ProtectONE® TA 500 15 kW	11039538	**08**
ProtectONE® TA 500 11 kW		
ProtectONE® TA 500 7.5 kW		
ProtectONE® TA 560 15 kW	11039539	**08**
ProtectONE® TA 560 11 kW		
ProtectONE® TA 560 7.5 kW		

* For options, see ProtectONE Accessories Pages.

DESCRIPTION

- Airflow adjustment device built into the box fan: ProtectONE® Adapt, exclusive to ALDES (optional).
- 8 box fan models for airflow of 1,000 to 35,000 m³/h.
- One-speed motorisations 1.1 kW to 22 kW.
- Galvanised steel box fan.
- Balanced backward curve impeller.
- Class F IP54 electric motor.

DIMENSIONS (mm) / WEIGHT (KG)

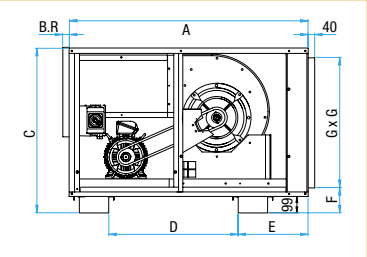

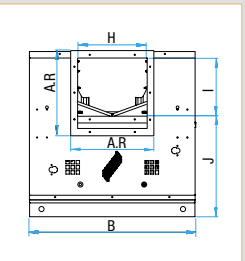

Top view

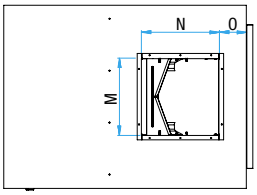

								Horizontal discharge			Vertical discharge			Discharge flange.		Weight box fan (kg)*
Type	A	B	C	D	E	F	GxG	H	I	J	M	N	O	AR	BR	
225	1047	712	757	619	214	153	550	290	242	474	288	288	141	350	43	102
250	1152	792	791	619	319	145	600	324	269	481	322	322	160	400	43	128
280	1257	872	871	619	424	135	700	363	302	528	361	361	170	450	43	193
315	1362	972	971	794	325	135	800	406	339	591	404	404	172	500	43	205
355	1467	1092	1011	794	430	155	800	455	382	588	453	453	163	550	43	227
400	1608	1213	1141	954	411	145	950	509	431	669	507	507	180	600	43	337
450	1758	1373	1211	954	561	155	1000	571	485	685	569	569	200	650	43	404
500	1918	1503	1281	1034	641	140	1100	640	538	702	638	638	227	700	43	435
560	2093	1683	1381	1114	736	140	1200	717	603	737	715	715	248	800	43	563

*With max. motorisation and without option.

ELECTRICAL CHARACTERISTICS

Type of motor	Poles	U (V)	P (kW)	In (A)	I max (A)	Id/In
1-speed motor						
1.5kW 1 speed 2P	2P	400 V	1.5	3.2	3.5	7
2.2kW 1 speed 2P			2.2	4.6	5.0	6.6
3kW 1 speed 2P			3	5.9	6.5	7.5
4kW 1 speed 2P			4	7.6	8.4	7
5.5kW 1 speed 2P			5.5	10.6	11.7	7.2
7.5kW 1 speed 2P			7.5	14.1	15.5	7.5
11kW 1 speed 2P			11	20.6	22.7	7.8
7.5kW 1 speed 4P	4P	400 V	7.5	14.8	16.3	7.8
11kW 1 speed 4P			11	21.3	23.4	6.3
15kW 1 speed 4P			15	29.8	32.8	6.1

ProtectONE® TR 1-speed

AIRFLOW DETAILS

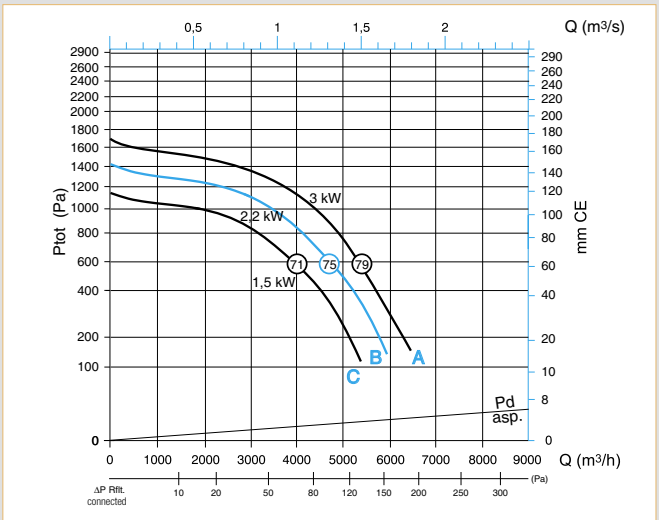

ProtectONE® TR 250 - 1-speed

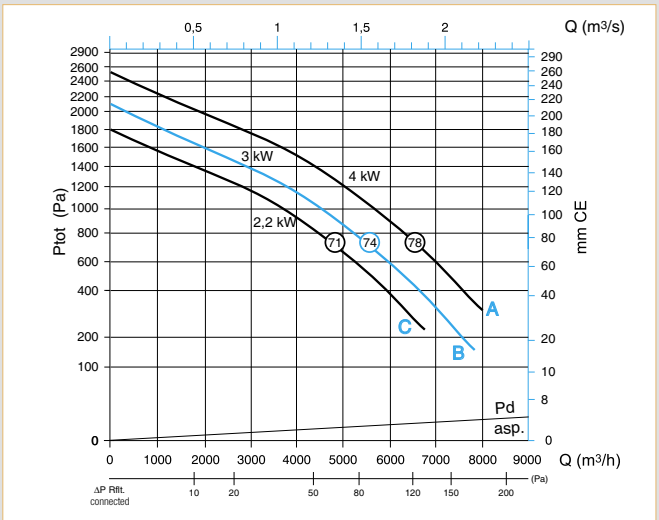

ProtectONE® TR 280 - 1-speed

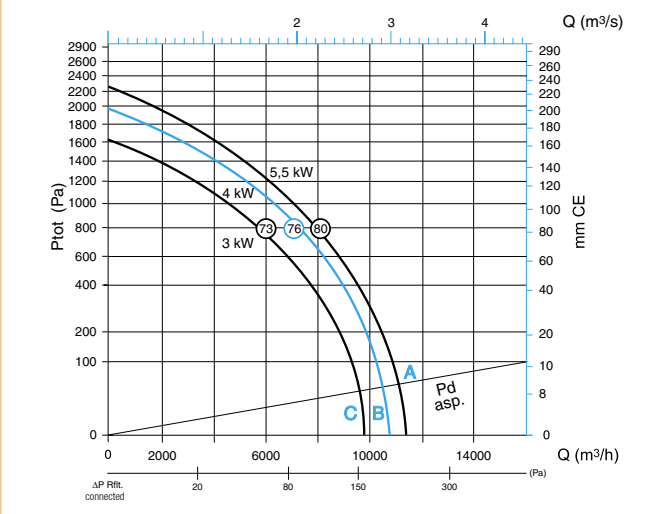

ProtectONE® TR 315 - 1-speed

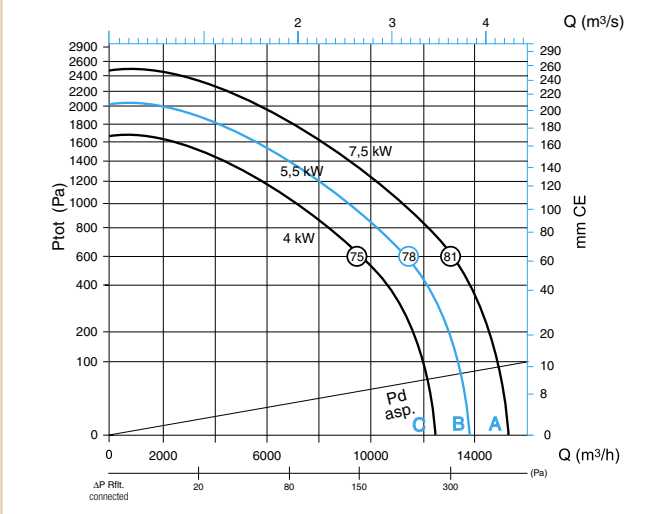

ProtectONE® TR 355 - 1-speed

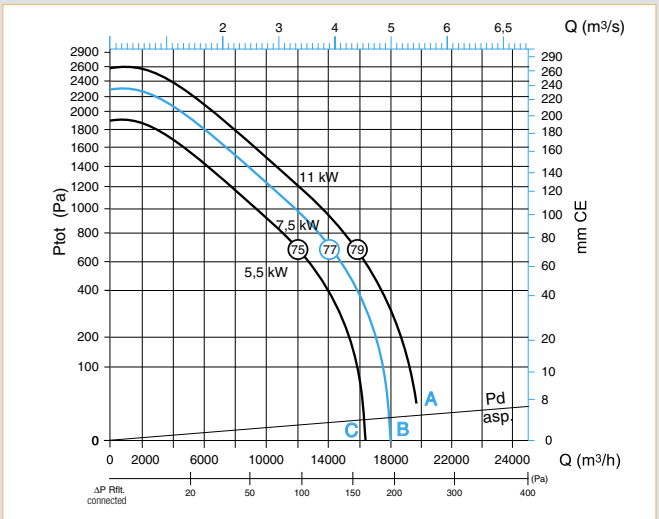

ProtectONE® TR 400 - 1-speed

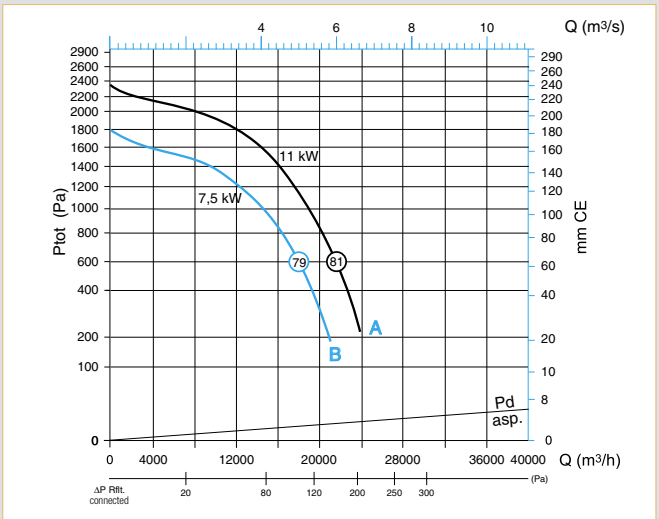

ProtectONE® TR 450 - 1-speed

ProtectONE® TR 1-speed

AIRFLOW DETAILS

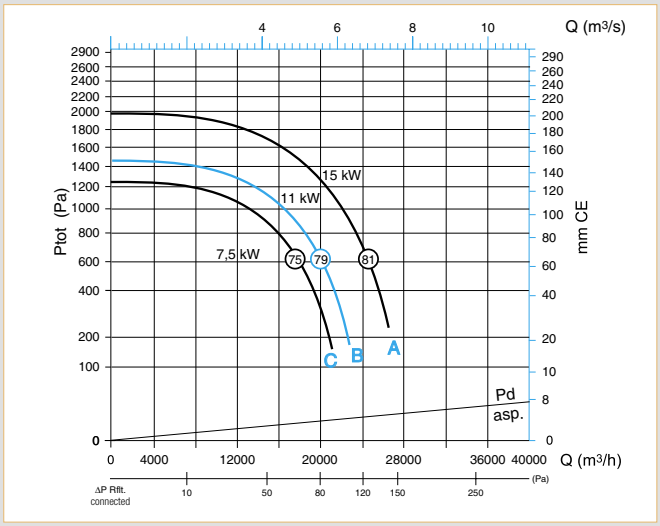

ProtectONE® TR 500 - 1-speed

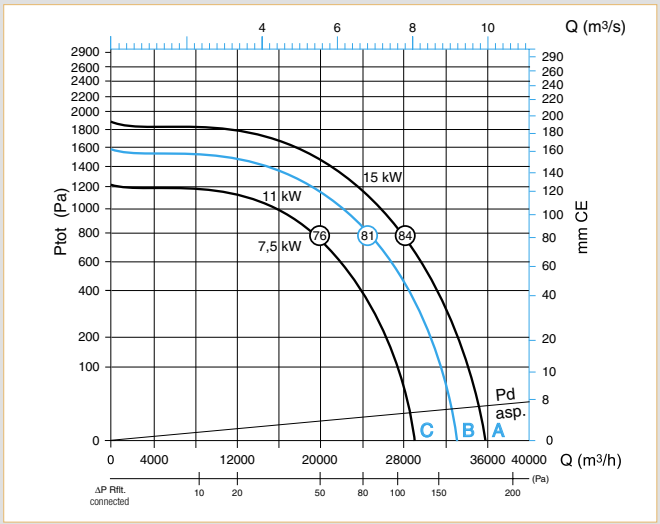

ProtectONE® TR 560 - 1-speed

Smoke and heat exhaust fans

ProtectONE® T smoke and heat exhaust box fans

ProtectONE® TR 2-speed - Independent windings (BI)

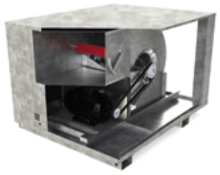

Exploded view with ProtectONE® Adapt adapter

PRODUCT ADVANTAGES

- *Easily adjusted airflow with the exclusive ProtectONE® Adapt system.*
- *Can be fully dismantled as standard.*
- *Thermal insulation for technical rooms.*
- *The backward curve impeller produces better results through smaller variation in airflow if pressure loss values vary.*

COMPLIANCE

- *Compliant with markings CE: 1812-CPR-1548.*
- *Certified EFECTIS F400-120 as per EN 12101-3.*
- *Safety box compliant with NF S61-937-1, NF S61937-9, NF 537.*

RANGE WITH CHOICE OF OPTIONS*

Description	Reference	Discount family
ProtectONE® TR 2-speed separate windings		
ProtectONE® TR 400 2-speed BI 10/3.3 kW	11039556	*08*
ProtectONE® TR 400 2-speed BI 6/2.2 kW		
ProtectONE® TR 450 2-speed BI 10/3.3 kW	11039557	*08*
ProtectONE® TR 450 2-speed BI 6/2.2 kW		
ProtectONE® TR 500 2-speed BI 14/4.5 kW	11039558	*08*
ProtectONE® TR 500 2-speed BI 10/3.3 kW		
ProtectONE® TR 500 2-speed BI 6/2.2 kW		
ProtectONE® TR 560 2-speed BI 14/4.5 kW	11039559	*08*
ProtectONE® TR 560 2-speed BI 10/3.3 kW		
ProtectONE® TR 560 2-speed BI 6/2.2 kW		

* For options, see ProtectONE Accessories Pages.

DESCRIPTION

- Airflow adjustment device built into the box fan: ProtectONE® Adapt, exclusive to ALDES (optional).
- 4 box fan models for airflow of 1,000 to 35,000 m³/h.
- 2-speed motorisations independent windings 1.1 kW to 20 kW.
- Galvanised steel box fan.
- Balanced backward curve impeller.
- Class F IP54 electric motor.

DIMENSIONS (mm) / WEIGHT (KG)

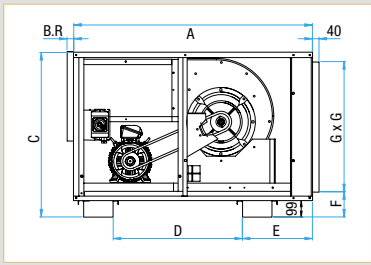

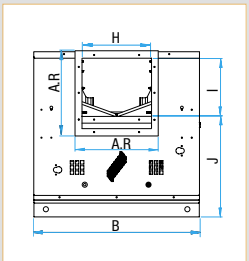

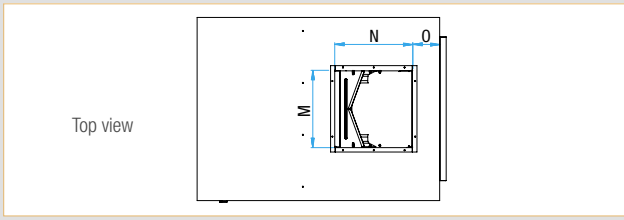

								Horizontal discharge			Vertical discharge			Discharge flange.		Weight box fan (kg)*
Type	A	B	C	D	E	F	GxG	H	I	J	M	N	O	AR	BR	
225	1047	712	757	619	214	153	550	290	242	474	288	288	141	350	43	102
250	1152	792	791	619	319	145	600	324	269	481	322	322	160	400	43	128
280	1257	872	871	619	424	135	700	363	302	528	361	361	170	450	43	193
315	1362	972	971	794	325	135	800	406	339	591	404	404	172	500	43	205
355	1467	1092	1011	794	430	155	800	455	382	588	453	453	163	550	43	227
400	1608	1213	1141	954	411	145	950	509	431	669	507	507	180	600	43	337
450	1758	1373	1211	954	561	155	1000	571	485	685	569	569	200	650	43	404
500	1918	1503	1281	1034	641	140	1100	640	538	702	638	638	227	700	43	435
560	2093	1683	1381	1114	736	140	1200	717	603	737	715	715	248	800	43	563

*With max. motorisation and without option.

ELECTRICAL CHARACTERISTICS

Type of motor	Poles	U (V)	P (kW)	In (A)	I max (A)	Id/In
Motor - 2-speed independent windings						
6/2.2kW BI 4/6P	4/6P	400 V	6/2.2	13.5/6.96	14.85/7.65	7.8/7.4
10/3.3kW BI 4/6P			10/3.3	22/8.74	24.2/9.61	7/4
14/4.5kW BI 4/6P			14/4.5	29.5/11.2	32.45/12.32	8.5/4.5

ProtectONE® TR 2-speed - Independent windings (BI)

AIRFLOW DETAILS

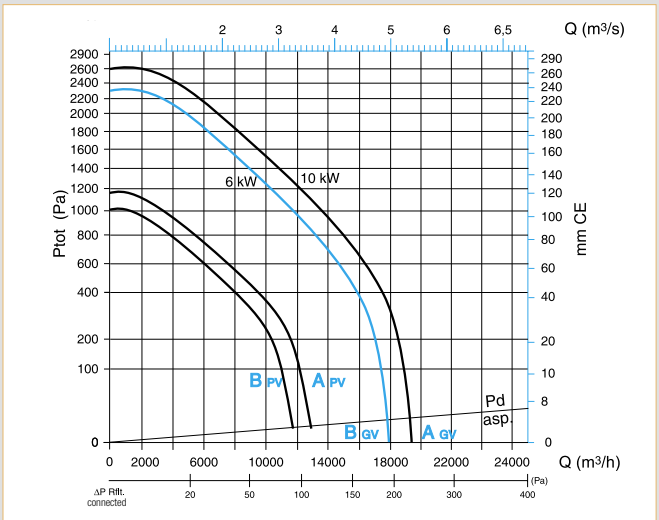

ProtectONE® TR 400 - 2-speed - BI

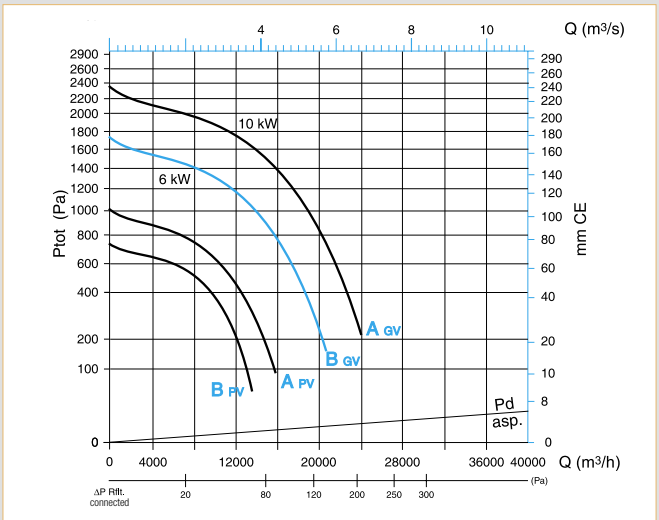

ProtectONE® TR 450 - 2-speed - BI

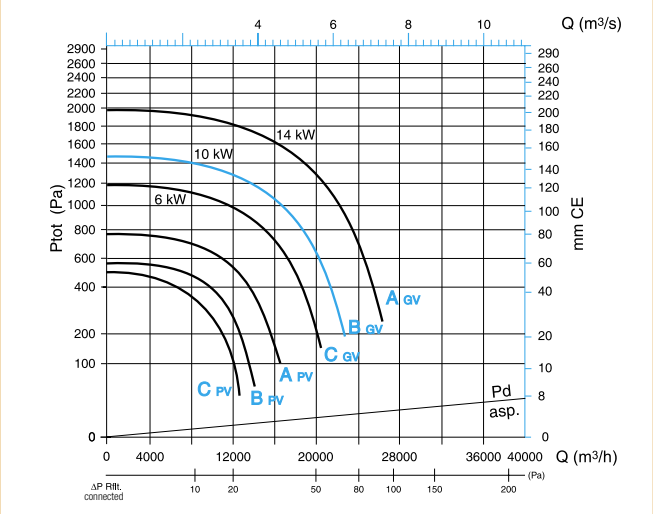

ProtectONE® TR 500 - 2-speed - BI

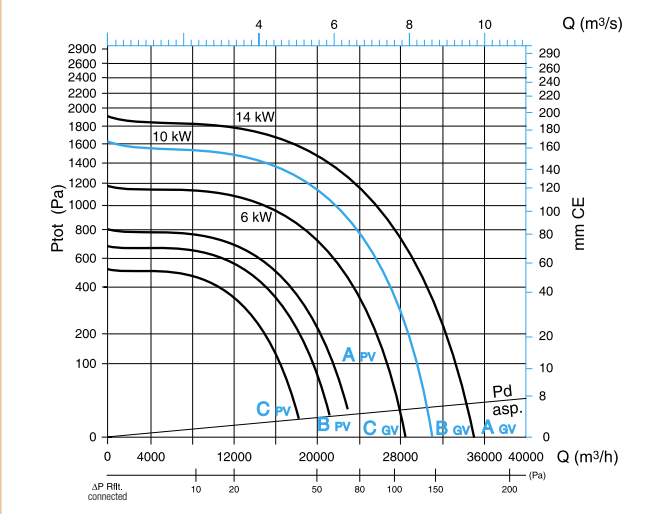

ProtectONE® TR 560 - 2-speed - BI

ProtectONE® TR 2-speed - Dahlander

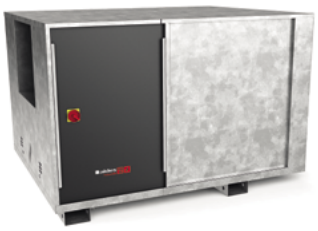

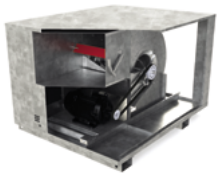

Exploded view with ProtectONE® Adapt adapter

PRODUCT ADVANTAGES

- *Easily adjusted airflow with the exclusive ProtectONE® Adapt system.*
- *Can be fully dismantled as standard.*
- *Thermal insulation for technical rooms.*
- *The backward curve impeller produces better results through smaller variation in airflow if pressure loss values vary.*

COMPLIANCE

- *Compliant with markings CE: 1812-CPR-1548.*
- *Certified EFECTIS F400-120 as per EN 12101-3.*
- *Safety box compliant with NF S61-937-1, NF S61937-9, NF 537.*
- *ErP-compliant.*

RANGE WITH CHOICE OF OPTIONS*

Description	Reference	Discount family
ProtectONE® TR 2-speed Dahlander		
ProtectONE® TR 250 2-speed DAH 3.1/0.8 kW	11039542	08
ProtectONE® TR 250 2-speed DAH 2.2/0.5 kW		
ProtectONE® TR 250 2-speed DAH 1.5/0.37 kW		
ProtectONE® TR 280 2-speed DAH 4.4/1.1 kW	11039543	08
ProtectONE® TR 280 2-speed DAH 3.1/0.8 kW		
ProtectONE® TR 280 2-speed DAH 2.2/0.5 kW		
ProtectONE® TR 315 2-speed DAH 6/1.5 kW	11039544	08
ProtectONE® TR 315 2-speed DAH 4.4/1.1 kW		
ProtectONE® TR 315 2-speed DAH 3.1/0.8 kW		
ProtectONE® TR 355 2-speed DAH 8/2 kW	11039545	08
ProtectONE® TR 355 2-speed DAH 6/1.5 kW		
ProtectONE® TR 355 2-speed DAH 4.4/1.1 kW		
ProtectONE® TR 400 2-speed DAH 7.2/1.8 kW	11039546	08
ProtectONE® TR 400 2-speed DAH 5/1.3 kW		
ProtectONE® TR 450 2-speed DAH 11/3 kW	11039547	08
ProtectONE® TR 450 2-speed DAH 7.2/1.8 kW		
ProtectONE® TR 500 2-speed DAH 14/3.5 kW	11039548	08
ProtectONE® TR 500 2-speed DAH 11/3 kW		
ProtectONE® TR 500 2-speed DAH 7.2/1.8 kW		
ProtectONE® TR 560 2-speed DAH 14/3.5 kW	11039549	08
ProtectONE® TR 560 2-speed DAH 11/3 kW		
ProtectONE® TR 560 2-speed DAH 7.2/1.8 kW		

* For options, see ProtectONE Accessories Pages.

DESCRIPTION

- Airflow adjustment device built into the box fan: ProtectONE® Adapt, exclusive to ALDES (optional).
- 8 box fan models for airflow of 1,000 to 35,000 m³/h.
- One-speed motorisations 1.5 kW to 20 kW.
- Galvanised steel box fan.
- Balanced backward curve impeller.
- Class F IP54 electric motor.

DIMENSIONS (mm) / WEIGHT (KG)

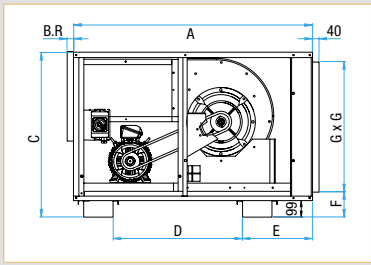

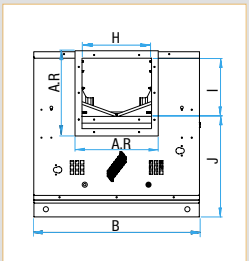

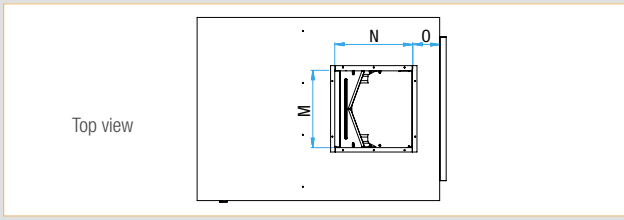

								Horizontal discharge			Vertical discharge			Discharge flange.		Weight box fan (kg)*
Type	A	B	C	D	E	F	GxG	H	I	J	M	N	O	A.R	B.R	
225	1047	712	757	619	214	153	550	290	242	474	288	288	141	350	43	102
250	1152	792	791	619	319	145	600	324	269	481	322	322	160	400	43	128
280	1257	872	871	619	424	135	700	363	302	528	361	361	170	450	43	193
315	1362	972	971	794	325	135	800	406	339	591	404	404	172	500	43	205
355	1467	1092	1011	794	430	155	800	455	382	588	453	453	163	550	43	227
400	1608	1213	1141	954	411	145	950	509	431	669	507	507	180	600	43	337
450	1758	1373	1211	954	561	155	1000	571	485	685	569	569	200	650	43	404
500	1918	1503	1281	1034	641	140	1100	640	538	702	638	638	227	700	43	435
560	2093	1683	1381	1114	736	140	1200	717	603	737	715	715	248	800	43	563

*With max. motorisation and without option.

ELECTRICAL CHARACTERISTICS

Type of motor	Poles	U (V)	P (kW)	In (A)	I max (A)	Id/In
2 speed motor Dahlander						
1.5/0.37kW DAH 2/4P	2/4	400 V	1.5/0.37	3.54/1.25	3.89/1.37	6.5/4.5
2.2/0.5kW DAH 2/4P			2.2/0.5	4.63/1.54	5.09/1.69	6/4
3.1/0.8kW DAH 2/4P			3.1/0.8	6.2/1.99	6.82/2.18	7.2/4.6
2.2/0.55kW DAH 4/8P	4/8	400 V	2.2/0.55	4.84/2	5.32/2.2	6.9/3.5
2.8/0.7kW DAH 4/8P			2.8/0.7	6.01/2.41	6.61/2.65	6/3.6
3.8/1kW DAH 4/8P			3.8/1	9.25/2.75	10.17/3.02	7/4
5/1.3kW DAH 4/8P			5/1.3	10.9/3.83	11.99/4.21	9.2/5.5
7.2/1.8kW DAH 4/8P			7.2/1.8	16.5/5.06	18.15/5.56	7.9/4.2
11/3kW DAH 4/8P			11/3	21/7	23.1/7.7	7/4.3
14/3.5kW DAH 4/8P			14/3.5	27/8.23	29.7/9.05	7.2/4.2
20/5kW DAH 4/8P			20/5	38.6/14.1	42.46/15.51	8.8/5.1

ProtectONE® TR 2-speed - Dahlander

AIRFLOW DETAILS

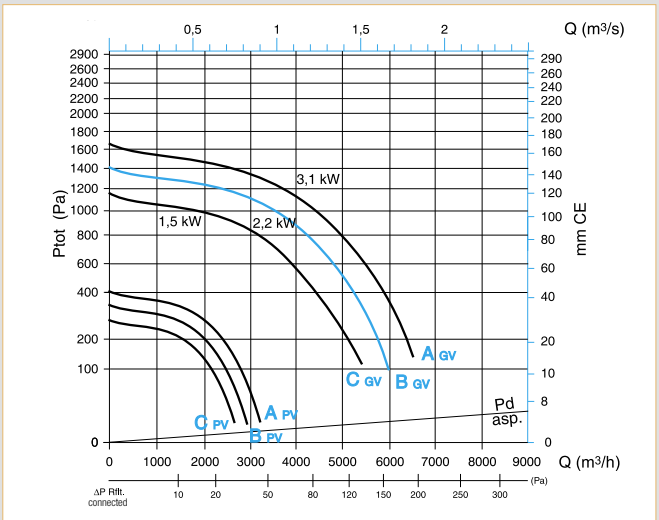

ProtectONE® TR 250 - 2-speed - Dahlander

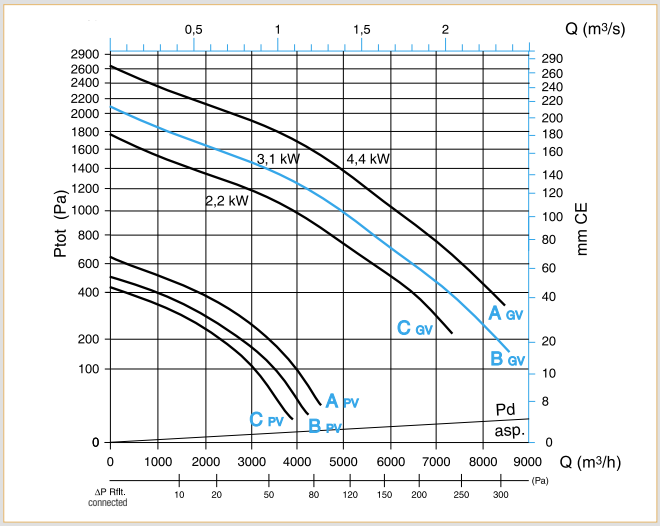

ProtectONE® TR 280 - 2-speed - Dahlander

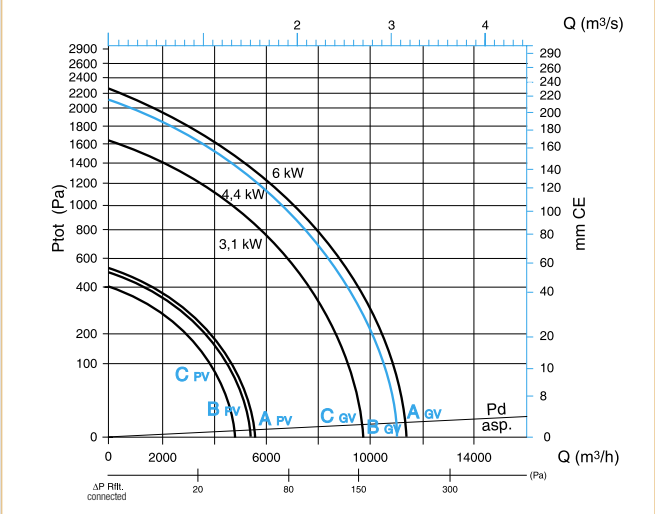

ProtectONE® TR 315 - 2-speed - Dahlander

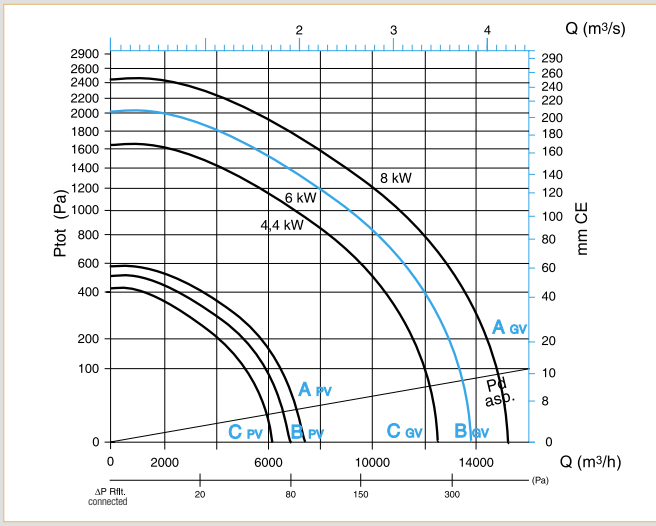

ProtectONE® TR 355 - 2-speed - Dahlander

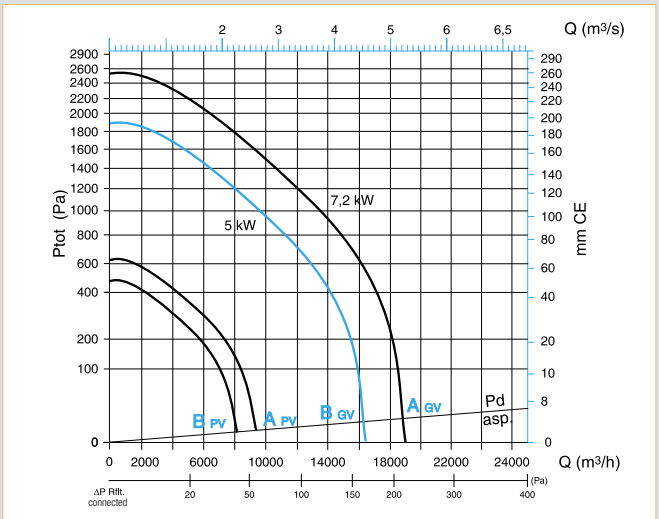

ProtectONE® TR 400 - 2-speed - Dahlander

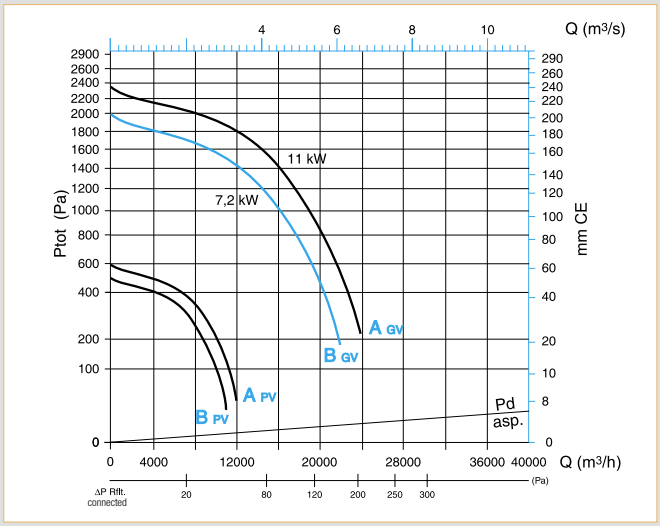

ProtectONE® TR 450 - 2-speed - Dahlander

ProtectONE® TR 2-speed - Dahlander

AIRFLOW DETAILS

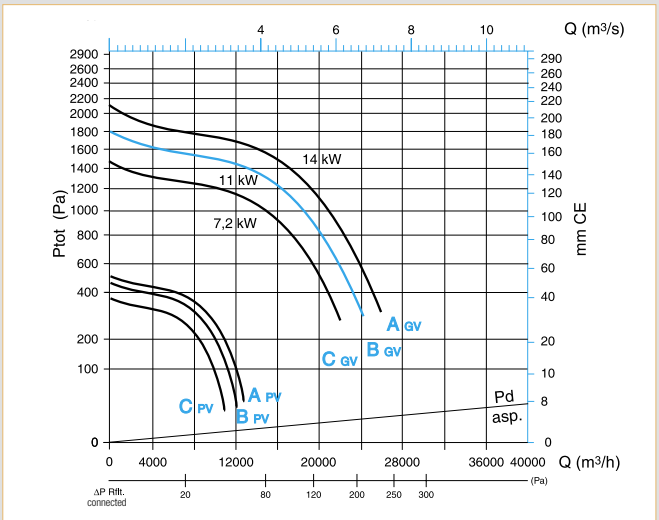

ProtectONE® TR 500 - 2-speed - Dahlander

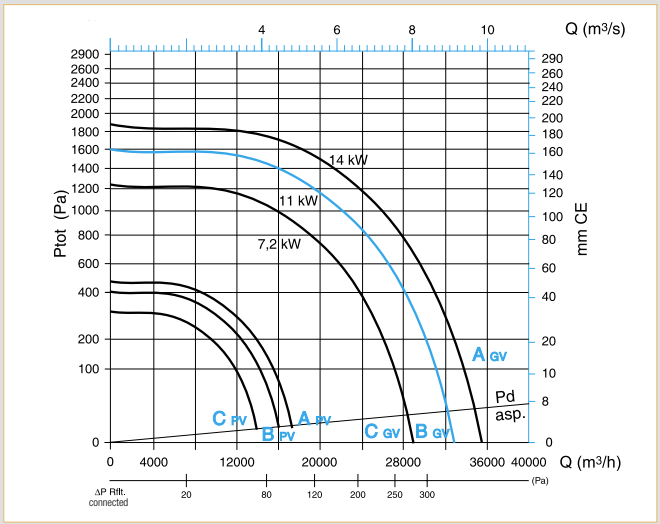

ProtectONE® TR 560 - 2-speed - Dahlander

ProtectONE® T Accessories and options

COMPLIANCE
• Options and accessories validated in the box fan report.

ACCESSORIES

Description	Reference	Discount family
NON-RETURN 225 ProtectONE® T	11039611	08
NON-RETURN 250 ProtectONE® T	11039612	08
NON-RETURN 280 ProtectONE® T	11039613	08
NON-RETURN 315 ProtectONE® T	11039614	08
NON-RETURN 355 ProtectONE® T	11039615	08
NON-RETURN 400 ProtectONE® T	11039616	08
NON-RETURN 450 ProtectONE® T	11039617	08
NON-RETURN 500 ProtectONE® T	11039618	08
NON-RETURN 560 ProtectONE® T	11039619	08
FLEX. DISCH. TRANSFO. 225 ProtectONE® T	11039601	08
FLEX. DISCH. TRANSFO. 250 ProtectONE® T	11039602	08
FLEX. DISCH. TRANSFO. 280 ProtectONE® T	11039603	08
FLEX. DISCH. TRANSFO. 315 ProtectONE® T	11039604	08
FLEX. DISCH. TRANSFO. 355 ProtectONE® T	11039605	08
FLEX. DISCH. TRANSFO. 400 ProtectONE® T	11039606	08
FLEX. DISCH. TRANSFO. 450 ProtectONE® T	11039607	08
FLEX. DISCH. TRANSFO. 500 ProtectONE® T	11039608	08
FLEX. DISCH. TRANSFO. 560 ProtectONE® T	11039609	08
DISCH. RECT. MS 225 ProtectONE® T	11039561	08
DISCH. RECT. MS 250 ProtectONE® T	11039562	08
DISCH. RECT. MS 280 ProtectONE® T	11039563	08
DISCH. RECT. MS 315 ProtectONE® T	11039564	08
DISCH. RECT. MS 450 ProtectONE® T	11039565	08
INT. RECT. MS 225 DISCH. 355 ProtectONE® T	11039566	08
INT. RECT. MS 250 DISCH. 400 ProtectONE® T	11039567	08
INT. RECT. MS 280 DISCH. 500 ProtectONE® T	11039568	08
INT. RECT. MS 315/355 DISCH. 560 ProtectONE® T	11039569	08
INT. RECT. MS 400 ProtectONE® T	11039496	08
INT. RECT. MS 450 ProtectONE® T	11039497	08
INT. RECT. MS 500 ProtectONE® T	11039498	08
INT. RECT. MS 560 ProtectONE® T	11039499	08
INT. CIRC. RECT. TRANS. Ø400 225 ProtectONE® T	11039571	08
INT. CIRC. RECT. TRANS. Ø400 250 ProtectONE® T	11039572	08
INT. CIRC. RECT. TRANS. Ø500 280 ProtectONE® T	11039573	08
INT. CIRC. RECT. TRANS. Ø560 315 ProtectONE® T	11039574	08
INT. CIRC. RECT. TRANS. Ø630 355 ProtectONE® T	11039575	08
INT. CIRC. RECT. TRANS. Ø400 400 ProtectONE® T	11039576	08
INT. CIRC. RECT. TRANS. Ø800 450 ProtectONE® T	11039577	08
INT. CIRC. RECT. TRANS. Ø800 500 ProtectONE® T	11039578	08
INT. CIRC. RECT. TRANS. Ø800 560 ProtectONE® T	11039579	08
RAIN HOOD. GRILLE 225 ProtectONE® T	11039581	08
RAIN HOOD. GRILLE 250 ProtectONE® T	11039582	08
RAIN HOOD. GRILLE 280 ProtectONE® T	11039583	08
RAIN HOOD. GRILLE 315 ProtectONE® T	11039584	08
RAIN HOOD. GRILLE 355 ProtectONE® T	11039585	08
RAIN HOOD. GRILLE 400 ProtectONE® T	11039586	08
RAIN HOOD. GRILLE 450 ProtectONE® T	11039587	08
RAIN HOOD. GRILLE 500 ProtectONE® T	11039588	08
RAIN HOOD. GRILLE 560 ProtectONE® T	11039589	08
DISCH. FLANGE 225 ProtectONE® T	11039591	08
DISCH. FLANGE 250 ProtectONE® T	11039592	08
DISCH. FLANGE 280 ProtectONE® T	11039593	08
DISCH. FLANGE 315 ProtectONE® T	11039594	08
DISCH. FLANGE 355 ProtectONE® T	11039595	08
DISCH. FLANGE 400 ProtectONE® T	11039596	08
DISCH. FLANGE 450 ProtectONE® T	11039597	08
DISCH. FLANGE 500 ProtectONE® T	11039598	08
DISCH. FLANGE 560 ProtectONE® T	11039599	08

ProtectONE® T Accessories and options

ACCESSORIES

Description	Reference	Discount family
VERTICAL DISCHARGE GRILLE 225 ProtectONE® T	11039621	08
VERTICAL DISCHARGE GRILLE 250 ProtectONE® T	11039622	08
VERTICAL DISCHARGE GRILLE 280 ProtectONE® T	11039623	08
VERTICAL DISCHARGE GRILLE 315 ProtectONE® T	11039624	08
VERTICAL DISCHARGE GRILLE 355 ProtectONE® T	11039625	08
VERTICAL DISCHARGE GRILLE 400 ProtectONE® T	11039626	08
VERTICAL DISCHARGE GRILLE 450 ProtectONE® T	11039627	08
VERTICAL DISCHARGE GRILLE 500 ProtectONE® T	11039628	08
VERTICAL DISCHARGE GRILLE 560 ProtectONE® T	11039629	08
BAG 4 EXTRA ANTI-VIBR. CYCLF400 (225/250)	11039347	08
BAG 6 EXTRA ANTI-VIBR. CYCLF400 (280 --> 560)	11039348	08
Flexible sleeve M0 Ø400	11096938	08
Flexible sleeve M0 Ø500	11096940	08
Flexible sleeve M0 Ø560	11096941	08
Flexible sleeve M0 Ø630	11096942	08
Flexible sleeve M0 Ø710	11096930	08
Flexible sleeve M0 Ø800	11096931	08
Flat roof base AXONE = 190 mm T0	11021267	08
Flat roof base AXONE = 380 mm T1	11021265	08
Flat roof base AXONE = 560 mm T2	11021266	08

OPTIONS

Options	225	250	280	315	355	400	450	500	560
ProtectONE® Adapt	**Available for all versions**								
Thermal and acoustic insulation									
Rain hood + grille									
Outlet connection flange									
Variable pulley									
100-1000 Pa pressure switch									
2nd 100-1000 Pa pressure switch									
All-in-one* 1-speed DES <9kW + IPDP	**Relay box accessories depend on version**								
All-in-one* 1-speed DES <13kW + IPDP									
All-in-one* 1-speed DES <23kW + IPDP									
All-in-one* 2-speed DES. BI <9kW + IPDP									
All-in-one* 2-speed DES. BI <13kW + IPDP									
All-in-one* 2-speed DES. BI <23kW + IPDP									
All-in-one* 2-speed DES.DAH <9kW + IPDP									
All-in-one* 2-speed DES.DAH <13kW + IPDP									
All-in-one* 2-speed DES.DAH <23kW + IPDP									

*All-in-one option: safety box, proximity switch and pressure switch included.

RAIN HOOD VISOR - DIMENSIONS (MM)

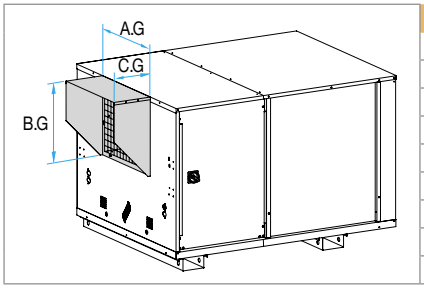

Model	A.G (mm)	B.G (mm)	C.G (mm)
ProtectONE® T 225	774	322	152
ProtectONE® T 250	408	349	174
ProtectONE® T 280	447	382	200
ProtectONE® T 315	490	419	205
ProtectONE® T 355	539	462	233
ProtectONE® T 400	593	511	263
ProtectONE® T 450	655	565	291
ProtectONE® T 500	724	618	318
ProtectONE® T 560	801	683	366

Smoke and heat exhaust fans

VELONE smoke exhaust roof fans

Presentation of VELONE F400° - 120 min range

VELONE basic - no options

With the 'All-In-One' option

ADVANTAGES

- *Up to 27,000 m³/h.*
- *Electrical accessories hard-wired in the factory and mounted inside to protect against physical impacts and weather conditions.*
- *Pressure switch connected in the factory.*
- *IPX4 certified rain hood kit.*
- *Pivot pin = easy cleaning.*

COMPLIANCE(S)

- *CE marking-compliant.*
- *Class F400°-120 min as per EN 12101-3.*
- *All-in-one option, backdraft damper and rain hood accessories compliant with EN 12101-3.*

DESCRIPTION

- 10 sizes of roof fan: for airflow rates between 500 to 27,000 m³/h.
- Base motor support made of galvanised steel, cowling made of ABS, attached using four quick-fit screws.
- Backward curve impeller made of galvanised steel.
- Class F IP55 electric motor.
- Galvanised steel protective grille.

FIELD OF APPLICATION

- Smoke extraction from non-residential buildings (public buildings, high-rises, commercial & industrial buildings, etc.) and multi-family housing (mainly type 3B and type 4 buildings). Ventilation in non-residential buildings where fire safety ratings are required (professional kitchens, sports halls, workshops, etc.).

INSTALLATION

- Exterior - directly into duct or onto a floor stack base (accessory).

FIRE PROTECTION RATING

VELONE has been granted the F400°-120 min. rating.
The 'All-in-One' option (built-in relay box), the backdraft damper and the rain hood kit have all been certified by fire tests.
- CE marking as per EN 12101-3.

LEGEND OPTIONS

- Adjustable pressure switch mounted inside to protect it from shocks and weather. EXCLUSIVE: the pressure switch is aeraulically connected (Note: for two-speed smoke extraction operations, two pressure switches should be used).
- Proximity switch hard-wired and mounted inside to protect it from shocks and weather.
- ALL-IN-ONE OPTION.
  - Ideal solution when the relay box is mounted within 2 m of the VELONE roof fan.
  - Saves time when wiring, operational guarantee and on-site wiring simplified.
  - The wiring for the relay box is installed in the factory, as per NF-S-61932.
  - Always includes the relay box, pressure switch and switch.
- AXONE 1V cabinet mounted inside to protect it from shocks and weather.
- AXONE 2V cabinet mounted outside of the smoke exhaust fan. Possibility to use a stack base.
- If the use of a vertical kit, attach the relay box outside the VELONE unit and outside of the airflow (the delivered cable measures 2 meters).

ACCESSORIES

- Rain hood kit, IPX4-certified in laboratory = protected against liquid spray from all directions.
- Backdraft damper certified for fire tests.
- Vertical outlet kit: incompatible with the All-in-One solution.
- Sealed frame or duct-mounted frame.
- Pivot pin.
- Roof or floor stack base (with slopes).
- Stack mounting for AXONE.
- Electrical accessories: Frequency controller.

PRE-SELECTION OF VELONE MODELS

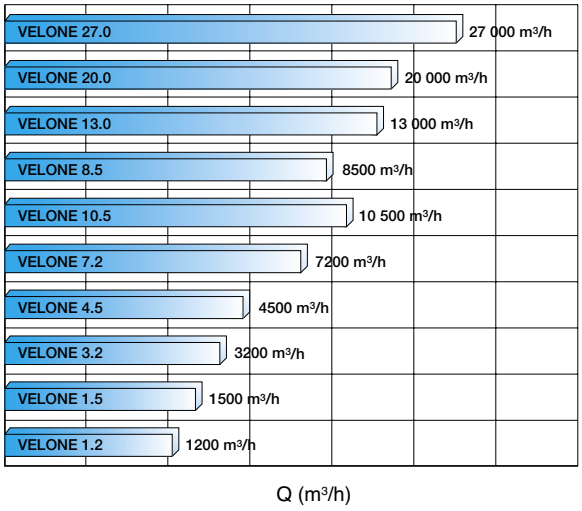

Airflow rates correspond to a pressure loss of 200 Pa.

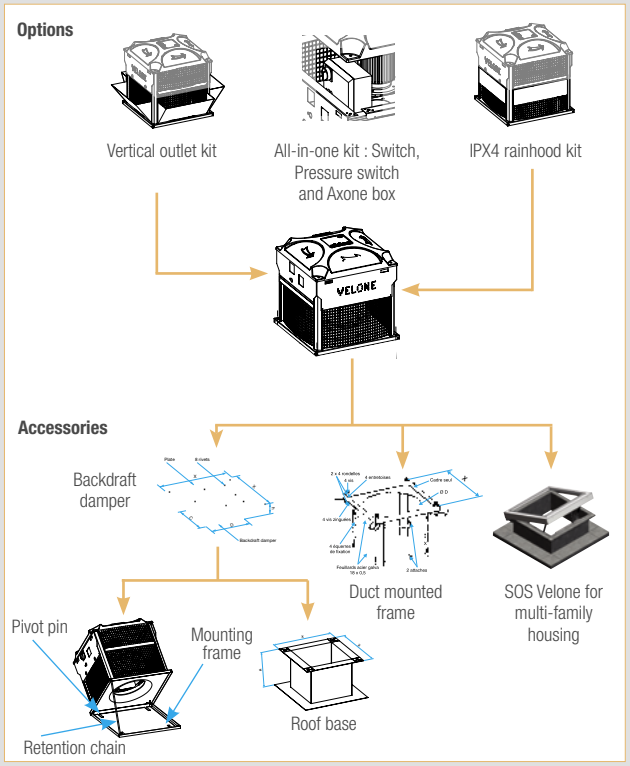

Advantages of the VELONE F400

VELONE basic - no options

AIRFLOW UP TO 27 000 M3/H

• Aldes has taken great care in the design of this new VELONE, to offer a range of smoke exhaust roof fans that comply with CE marking requirements, with an airflow up to 27,000 m3/h without increasing unit dimensions.

COMPACT SO AS TO PROTECT IT FROM IMPACTS AND BAD WEATHER

• The galvanised steel on the motor mounting (rather than plastic) provides sustainable protection for the electrical accessories (relay boxes, pressure switches and proximity switches) from impacts and bad weather.

• On the 2-speed models, the AXONE box is supplied with a 2-metre cable for external connection to the roof fan. It is possible to use the stack base.

AIR DUCT CONNECTION OF THE PRESSURE SWITCH

• As the inventors of the 'All-in-One' system (relay box hard-wired in the factory), we can exclusively offer this new range with pressure switches already connected to the air ducts.
• This option minimises labour time on-site: no more drilling ducts on-site!

RAIN HOOD KIT IPX4 - AN ALDES EXCLUSIVE FEATURES

• Smoke extraction roof fans that are only used for smoke extraction are permanently on standby, ready to start in the event of a fire or for a test. A smoke extraction roof fan on standby presents a risk of rain water penetration in the event of a storm and violent winds.
• The new VELONE design means we can offer you a new accessory: the rain hood kit. The rain hood kit comprises four components to be assembled on-site. It has passed all the required fire tests and comes with an IPX4 protection rating, certified by the CETIAT laboratory.
• This corresponds to the protection rating commonly used for electrical equipment: switch, pressure switch, relay box, etc. The first digit concerns protection against solid particles (here «X» as it does not concern a roof fan). The second digit is the liquid ingress protection rating: «4» guarantees that the equipment is protected against water splashing against it from any direction with a volume of 10 litres per minute.

CONFORMING BACKDRAFT DAMPER

• The backdraft damper is used to prevent heat loss and has successfully passed its regulatory fire tests.

EASY REPLACEMENT

• This new range of roof fan can replace any new VELONE delivered between 1998 & 2007. In fact, we designed this new range without modifying the base dimensions. What is more, for identical base dimensions, the new range has better aeraulic performance levels.

With the 'All-In-One' option

With the 'All-In-One' option, hood removed

Smoke and heat exhaust fans

VELONE smoke exhaust roof fans

VELONE F400 - 1.2 - 3-phase/single-phase

VELONE basic - no options

With the 'All-In-One' option

ADVANTAGES

- *Accessories protected from impacts & weather conditions by the metal body.*
- *Electrical accessories hard-wired in the factory and mounted inside the cabinet to protect them against physical impacts and weather conditions.*
- *Pressure switch connected in factory.*
- *IPX4 certified rain hood kit.*
- *Pivot pin = easy cleaning.*

COMPLIANCE(S)

- *CE marking-compliant as per EN 12101-3.*
- *2-hour fire rating: F400 (120).*
- *All-in-one option with compliant accessories: backdraft damper and rain hood kit.*

RANGE

Designation	Reference	Discount family
With choice of options - 1 speed		
VELONE 1.2 - 4T 0.37KW	11021340	***08***
VELONE 1.2M 0.24KW	11021390	***08***

DESCRIPTION

- Airflow between 100 and 1200 m³/h at 200 Pa.

AVAILABLE CHOICE OF OPTIONS

- Aeraulically connected pressure switch, mounted and protected.
- Hardwired proximity switch, mounted and protected.
- All-in-One solution (not available for single-phase systems):
- relay box delivered already wired,
- pressure switch & proximity switch supplied and wired in.
- If using a vertical kit, attach the relay box outside the VELONE unit and outside of the air flow (the supplied cable measures 2 meters).

Designation	Code
Pressure switch 40-300 Pa aeraulically connected	OPT21279
1-speed switch -7.5 kW + contacts	OPT21281
All-in-One 1-speed smoke extraction	OPT21273

ACCESSORIES

Description on following pages.

Designation	Reference	Discount family
Rain guard kit IPx4 1.2/1.5/3.2	11021285	***08***
Vertical kit 1.2/1.5/3.2	11021366	***08***
Sealed frame 1.2/1.5/3.2	11021290	***08***
Pivot pin 1.2/1.5/3.2	11021069	***08***
Backdraft damper 1.2/1.5/3.2	11021260	***08***
Duct-mounted frame 1.2/1.5/3.2	11021295	***08***
Floor stack base 1.2/1.5/3.2	11021080	***08***
Roof stack base 1.2/1.5/3.2	11021085	***08***

ELECTRICAL ACCESSORIES

- Single phase voltage controller.
- 3-phased auto transformer.
- Frequency controller.

DIMENSIONS (MM) – WEIGHT (KG)

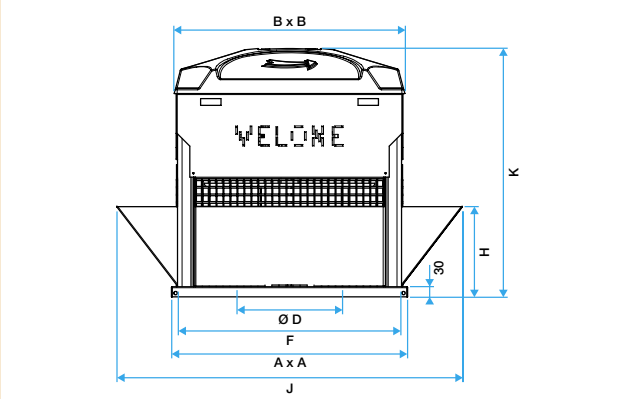

Type	Horizontal air outlet						With vertical kit		
Velone	A	B	Ø D	F	K	Weight	J	H	Weight
1.2	533	519	185	493	580	36	107	190	41

AIRFLOW AND ACOUSTIC DETAILS

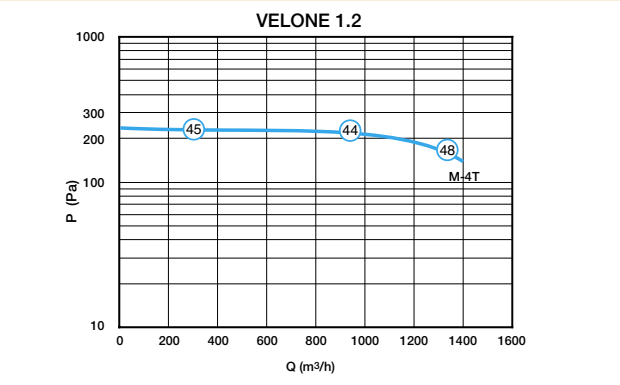

- Curves according to NF EN ISO 5801, inlet connected (Ø 250 mm).
- Pressure levels indicated on curves = static pressure.
- The circled values correspond to a global sound pressure level in free air, at 6 m and weighted by [Lp6m (dB(A))].

ELECTRICAL DETAILS

- Rated current is given for a voltage of 400V with 3-phase roof fans.
- 60 Hz power supply: contact us for more details.

Type	Number of poles	U (V)	P (kW)	f (Hz)	Rated current (A)	Id /In
1.2M	4	230	0,25	50	2,2	6,2
1.2T	4	230/400	0,37	50/60	1,03	5

Smoke and heat exhaust fans

VELONE smoke exhaust roof fans

VELONE F400 - 1.5 - 3-phase/single-phase

VELONE basic - no options

ADVANTAGES

- *Accessories protected from impacts & weather conditions by the metal body.*
- *Electrical accessories hard-wired in the factory and mounted inside the cabinet to protect them against physical impacts and weather conditions.*
- *Pressure switch connected in factory.*
- *IPX4 certified rain hood kit.*
- *Pivot pin = easy cleaning.*

COMPLIANCE(S)

- *CE marking-compliant as per EN 12101-3.*
- *2-hour fire rating: F400 (120).*
- *All-in-one option with compliant accessories: backdraft damper and rain hood kit.*

RANGE

Designation	Reference	Discount family
VELONE STOCK 1-speed (with proximity switch)		
VELONE 1.5M 0.24KW+IP (stock)	11021395	*08*
VELONE 1.5-6T 0.18 KW+IP (stock)	11021256	*08*
With choice of options - 1 speed		
VELONE 1.5 - 4T 0.37KW	11021341	*08*
VELONE 1.5 - 6T 0.18KW	11021342	*08*
VELONE 1.5M 0.24KW	11021391	*08*
With choice of options - 2 speed		
VELONE 1.5 - 4/8T 0.6/0.15KW	11021371	*08*

DESCRIPTION

- Airflow between 100 and 1500 m³/h at 200 Pa.

AVAILABLE CHOICE OF OPTIONS

- Aeraulically connected pressure switch, mounted and protected. For two-speed smoke extraction, two pressure switches are required.
- Hardwired proximity switch, mounted and protected.
- All-in-One solution (not available for single-phase systems):
- relay box delivered already wired,
- pressure switch & proximity switch supplied and wired in.
- On the 2-speed models, the AXONE box is supplied with a 2-metre cable for external connection to the roof fan. It is possible to use the stack base.
- If using a vertical kit, attach the relay box outside the VELONE unit and outside of the air flow (the supplied cable measures 2 meters).

Designation	Code
Pressure switch 40-300 Pa aeraulically connected	OPT21279
1-speed switch -7.5 kW + contacts	OPT21281
2-speed switch -7.5 kW + contacts	OPT21282
All-in-One 1-speed smoke extraction	OPT21273
TAll-in-One 2-speed Dahl smoke extract ion	OPT21275
All-in-One 2-speed Dahl smoke extraction + comfort	OPT21276

ACCESSORIES

Description on following pages.

Designation	Reference	Discount family
Rain guard kit IPx4 1.2/1.5/3.2	11021285	*08*
Vertical kit 1.2/1.5/3.2	11021366	*08*
Sealed frame 1.2/1.5/3.2	11021290	*08*
Pivot pin 1.2/1.5/3.2	11021069	*08*
Backdraft damper 1.2/1.5/3.2	11021260	*08*
Duct-mounted frame 1.2/1.5/3.2	11021295	*08*
Floor stack base 1.2/1.5/3.2	11021080	*08*
Roof stack base 1.2/1.5/3.2	11021085	*08*

ELECTRICAL ACCESSORIES

- Single-phase voltage controller.
- 3-phase autotransformer.
- 2-speed comfort control box.

DIMENSIONS (MM) – WEIGHT (KG)

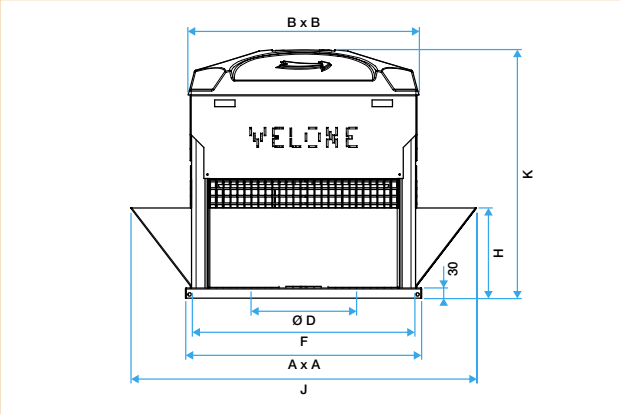

Type	Horizontal air outlet						With vertical kit		
Velone	A	B	ØD	F	K	Weight	J	H	Weight
1.5	533	519	209	493	607	38	707	190	43

AIRFLOW AND ACOUSTIC DETAILS

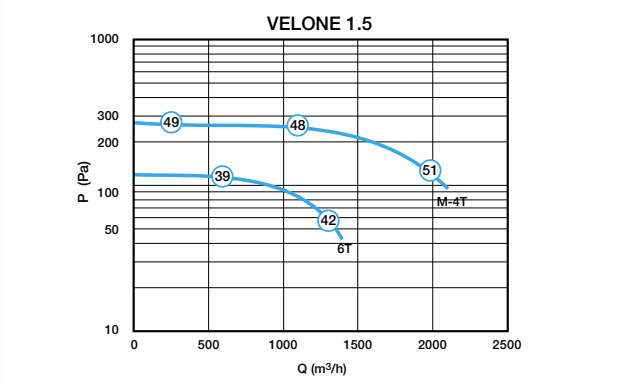

- Curves as per NF EN ISO 5801, intake connected (Ø 250 mm).
- Pressure levels indicated on curves = static pressure.
- The circled values correspond to a global sound pressure level in free air, at 6 m and weighted by A [Lp6m (dB(A))].

ELECTRICAL DETAILS

- Rated current is given for a voltage of 400V with 3-phase roof fans.
- 4/8 = Dahlander motor.
- 60 Hz power supply: contact us for more details.

Type	Number of poles	U (V)	P (kW)	f (Hz)	Rated current (A)	Id /In
1.5 M	4	230	0,25	50	2,2	6,2
1.5 4T	4	230 / 400	0,37	50/60	1,03	5
1.5 6T	6	230 / 400	0,18	50/60	0,71	3,5
1.5-4/8T	4/8	400	0,6 / 0,15	50	1,87 / 0,9	5,2 / 2,8

Smoke and heat exhaust fans

VELONE smoke exhaust roof fans

VELONE F400 - 3.2 - 3-phase/single-phase

VELONE basic - no options

With the 'All-In-One' option

ADVANTAGES

- *Accessories protected from impacts & weather conditions by the metal body.*
- *Electrical accessories hard-wired in the factory and mounted inside the cabinet to protect them against physical impacts and weather conditions.*
- *Pressure switch connected in factory.*
- *IPX4 certified rain hood kit.*
- *Pivot pin = easy cleaning.*

COMPLIANCE(S)

- *CE marking-compliant as per EN 12101-3.*
- *2-hour fire rating: F400 (120).*
- *All-in-one option with compliant accessories: backdraft damper and rain hood kit.*

RANGE

Designation	Reference	Discount family
VELONE STOCK 1-speed (with proximity switch)		
VELONE 3.2 - 6T 0.18KW + IP (stock)	11021257	***08***
VELONE 3.2 - 4T 0.55KW + IP (stock)	11021386	***08***
VELONE 3.2M 0.37KW + IP (stock)	11021396	***08***
with choice of options / VELONE 1-speed		
VELONE 3.2 - 4T 0.55KW	11021344	***08***
VELONE 3.2M 0.37KW	11021392	***08***
VELONE 3.2 - 6T 0.18KW	11021345	***08***
with choice of options / VELONE 2-speed		
VELONE 3.2 - 4/8T 0.6/0.15KW	11021373	***08***

DESCRIPTION

- Airflow between 100 and 3200 m³/h at 200 Pa.

AVAILABLE CHOICE OF OPTIONS

- Aeraulically connected pressure switch, mounted and protected. For two-speed smoke extraction, two pressure switches are required.
- Hardwired proximity switch, mounted and protected.
- All-in-One solution (not available for single-phase systems):
- relay box delivered already wired,
- pressure switch & proximity switch supplied and wired in.
- On the 2-speed models, the AXONE box is supplied with a 2-metre cable for external connection to the roof fan. It is possible to use the stack base.
- If using a vertical kit, attach the relay box outside the VELONE unit and outside of the air flow (the supplied cable measures 2 meters).

Designation	Code
Pressure switch 40-300 Pa aeraulically connected	OPT21279
1-speed switch -7.5 kW + contacts	OPT21281
2-speed switch -7.5 kW + contacts	OPT21282
All-in-One 1-speed smoke extraction	OPT21273
TAll-in-One 2-speed Dahl smoke extract ion	OPT21275
All-in-One 2-speed Dahl smoke extraction + comfort	OPT21276

ACCESSORIES

Description on following pages.

Designation	Reference	Discount family
Rain guard kit IPx4 1.2/1.5/3.2	11021285	***08***
Vertical kit 1.2/1.5/3.2	11021366	***08***
Sealed frame 1.2/1.5/3.2	11021290	***08***
Pivot pin 1.2/1.5/3.2	11021069	***08***
Backdraft damper 1.2/1.5/3.2	11021260	***08***
Duct-mounted frame 1.2/1.5/3.2	11021295	***08***
Floor stack base 1.2/1.5/3.2	11021080	***08***
Roof stack base 1.2/1.5/3.2	11021085	***08***

ELECTRICAL ACCESSORIES

- Single-phase voltage controller.
- 3-phase autotransformer.
- Frequency controller.
- 2-speed comfort control box.

DIMENSIONS (MM) – WEIGHT (KG)

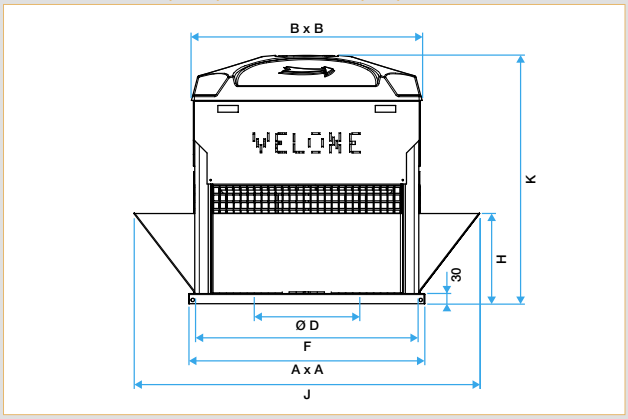

Type	Horizontal air outlet						With vertical kit		
Velone	A	B	Ø D	F	K	Weight	J	H	Weight
3.2	533	519	235	493	629	39	707	190	44

AIRFLOW AND ACOUSTIC DETAILS

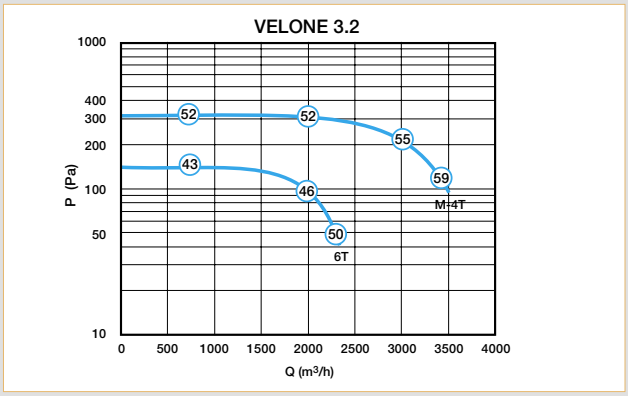

- Curves as per NF EN ISO 5801, intake connected (Ø 315 mm).
- Pressure levels indicated on curves = static pressure.
- The circled values correspond to a global sound pressure level in free air, at 6 m and weighted by A [Lp6m (dB(A))].

ELECTRICAL DETAILS

- Rated current is given for a voltage of 400V with 3-phase roof fans.
- 4/8 = Dahlander motor.
- 60 Hz power supply: contact us for more details.

Type	Number of poles	U (V)	P (kW)	f (Hz)	Rated current (A)	Id /In
3.2 M	4	230	0,37	50	3	6
3.2-4T	4	230/400	0,55	50/60	1,3	6
3.2-6T	4	230/400	0,18	50/60	0,71	3,5
3.2-4/8	4/8	400	0,6/0,15	50	1,87/0,9	5,2/2,8

Smoke and heat exhaust fans

VELONE smoke exhaust roof fans

VELONE F400 - 4.5 - 3-phase/single-phase

VELONE basic - no options

ADVANTAGES

- *Accessories protected from impacts & weather conditions by the metal body.*
- *Electrical accessories hard-wired in the factory and mounted inside the cabinet to protect them against physical impacts and weather conditions.*
- *Pressure switch connected in factory.*
- *IPX4 certified rain hood kit.*
- *Pivot pin = easy cleaning.*

COMPLIANCE(S)

- *CE marking-compliant as per EN 12101-3.*
- *2-hour fire rating: F400 (120).*
- *All-in-one option with compliant accessories: backdraft damper and rain hood kit.*

RANGE

Designation	Reference	Discount family
VELONE STOCK 1-speed (with proximity switch)		
VELONE 4.5 - 4T 0.75KW + IP (stock)	11021397	***08***
VELONE 4.5 - 4T 0.75KW + IP (stock)	11021387	***08***
VELONE 4.5 - 6T 0.37KW + IP (stock)	11021258	***08***
with choice of options / VELONE 1-speed		
VELONE 4.5 - 4T 0.75KW	11021347	***08***
VELONE 4.5 - 6T 0.37KW	11021348	***08***
VELONE 4.5M 0.75KW	11021393	***08***
with choice of options / VELONE 2-speed		
VELONE 4.5 - 4/6T 0.75/0.25KW	11021374	***08***
VELONE 4.5 - 4/8T 0.8/0.20KW	11021375	***08***

DESCRIPTION

- Airflow between 300 and 4500 m³/h at 200 Pa.

AVAILABLE CHOICE OF OPTIONS

- Aeraulically connected pressure switch, mounted and protected. For two-speed smoke extraction, two pressure switches are required.
- Hardwired proximity switch, mounted and protected.
- All-in-One solution (not available for single-phase systems):
- relay box delivered already wired,
- pressure switch & proximity switch supplied and wired in.
- On the 2-speed models, the AXONE box is supplied with a 2-metre cable for external connection to the roof fan. It is possible to use the stack base.
- If using a vertical kit, attach the relay box outside the VELONE unit and outside of the air flow (the supplied cable measures 2 meters).

Designation	Code
Pressure switch 40-300 Pa aeraulically connected	OPT21279
Pressure switch 100-1000 Pa aeraulically connected	OPT21280
1-speed switch -7.5 kW + contacts	OPT21281
2-speed switch -7.5 kW + contacts	OPT21282
All-in-One 1-speed smoke extraction	OPT21273
All-in-One 2-speed Dahl smoke extraction	OPT21275
All-in-One 2-speed Dahl smoke extraction + comfort	OPT21276
All-in-One 2-speed BI smoke extraction	OPT21277
All-in-One 2-speed BI smoke extraction + comfort	OPT21278

ACCESSORIES

Description on following pages.

Designation	Reference	Discount family
Rain guard kit IPx4 - 4.5/7.2/10.5	11021286	***08***
Vertical kit 4.5/7.2/10.5	11021367	***08***
Sealed frame 4.5/7.2/10.5	11021291	***08***
Pivot pin 4.5/7.2/10.5	11021070	***08***
Backdraft damper 4.5/7.2/10.5	11021261	***08***
Duct-mounted frame 4.5/7.2/10.5	11021296	***08***
Floor stack base 4.5/7.2/10.5	11021081	***08***
Roof stack base 4.5/7.2/10.5	11021086	***08***

ELECTRICAL ACCESSORIES

- Single-phase voltage controller.
- 3-phase autotransformer.
- Frequency controller.
- 2-speed comfort control box.

DIMENSIONS (MM) – WEIGHT (KG)

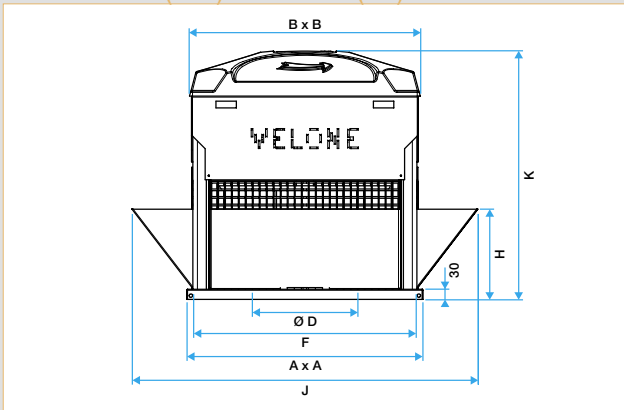

Type	Horizontal air outlet						With vertical kit		
Velone	A	B	Ø D	F	K	Weight	J	H	Weight
4.5	698	684	265	658	658	50	991	265	60

AIRFLOW AND ACOUSTIC DETAILS

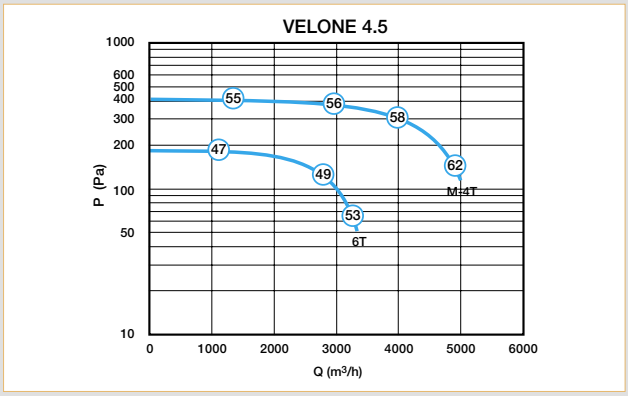

- Curves as per NF EN ISO 5801, intake connected (Ø 355 mm).
- Pressure levels indicated on curves = static pressure.
- The circled values correspond to a global sound pressure level in free air, at 6 m and weighted by A [Lp6m (dB(A))].

ELECTRICAL DETAILS

- Rated current is given for a voltage of 400V with 3-phase roof fans.
- 4/8 = Dahlander motor - 4/6 = Motor with independent windings (BI).
- 60 Hz power supply: contact us for more details.

Type	Number of poles	U (V)	P (kW)	f (Hz)	Rated current (A)	Id /In
4.5 M	4	230	0,75	50	5,5	5,5
4.5- 4T	4	230/400	0,75	50/60	1,65	6
4.5- 6T	6	230/400	0,37	50/60	1,09	4,7
4.5 -4/6T	4/6	400	0,75/0,25	50	1,98/1,2	4,7/3,9
4.5 -4/8T	4/8	400	0,8/0,2	50	1,99/0,88	4,7/2,7

Smoke and heat exhaust fans

VELONE smoke exhaust roof fans

VELONE F400 - 7.2 - 3-phase/single-phase

VELONE basic - no options

With the 'All-In-One' option

ADVANTAGES

- *Accessories protected from impacts & weather conditions by the metal body.*
- *Electrical accessories hard-wired in the factory and mounted inside the cabinet to protect them against physical impacts and weather conditions.*
- *Pressure switch connected in factory.*
- *IPX4 certified rain hood kit.*
- *Pivot pin = easy cleaning.*

COMPLIANCE(S)

- *CE marking-compliant as per EN 12101-3.*
- *2-hour fire rating: F400 (120).*
- *All-in-one option with compliant accessories: backdraft damper and rain hood kit.*

RANGE

Designation	Reference	Discount family
VELONE STOCK 1-speed (with proximity switch)		
VELONE 7.2 - 4T 1.1KW + IP (stock)	11021388	*08*
VELONE 7.2M 1.1KW + IP (stock)	11021398	*08*
with choice of options / VELONE 1-speed		
VELONE 7.2 - 4T 1.1KW	11021350	*08*
VELONE 7.2 - 6T 0.37KW	11021351	*08*
VELONE 7.2M 1.1KW	11021394	*08*
with choice of options / VELONE 2-speed		
VELONE 7.2 - 4/6T 1.1/0.3KW	11021376	*08*
VELONE 7.2 - 4/8T 1.2/0.3KW	11021377	*08*

DESCRIPTION

- Airflow between 500 and 7200 m³/h at 200 Pa.

AVAILABLE CHOICE OF OPTIONS

Designation	Code
Pressure switch 40-300 Pa aeraulically connected	OPT21279
Pressure switch 100-1000 Pa aeraulically connected	OPT21280
1-speed switch -7.5 kW + contacts	OPT21281
2-speed switch -7.5 kW + contacts	OPT21282
All-in-One 1-speed smoke extraction	OPT21273
All-in-One 2-speed Dahl smoke extraction	OPT21275
All-in-One 2-speed Dahl smoke extraction + comfort	OPT21276
All-in-One 2-speed BI smoke extraction	OPT21277
All-in-One 2-speed BI smoke extraction + comfort	OPT21278

ACCESSORIES

Description on following pages.

Designation	Reference	Discount family
Rain guard kit IPx4 - 4.5/7.2/10.5	11021286	*08*
Vertical kit 4.5/7.2/10.5	11021367	*08*
Sealed frame 4.5/7.2/10.5	11021291	*08*
Pivot pin 4.5/7.2/10.5	11021070	*08*
Backdraft damper 4.5/7.2/10.5	11021261	*08*
Duct-mounted frame 4.5/7.2/10.5	11021296	*08*
Floor stack base 4.5/7.2/10.5	11021081	*08*
Roof stack base 4.5/7.2/10.5	11021086	*08*

ELECTRICAL ACCESSORIES

- Single-phase voltage controller.
- 3-phase autotransformer.
- Frequency controller.
- 2-speed comfort control box.

DIMENSIONS (MM) – WEIGHT (KG)

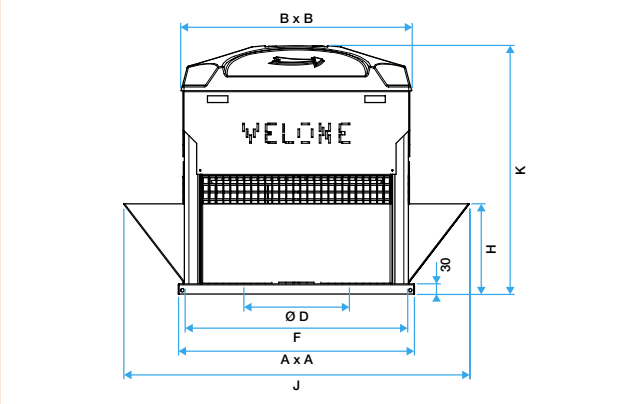

Type	Horizontal air outlet						With vertical kit		
Velone	A	B	Ø D	F	K	Weight	J	H	Weight
7.2	698	684	299	658	688	60	991	265	70

AIRFLOW AND ACOUSTIC DETAILS

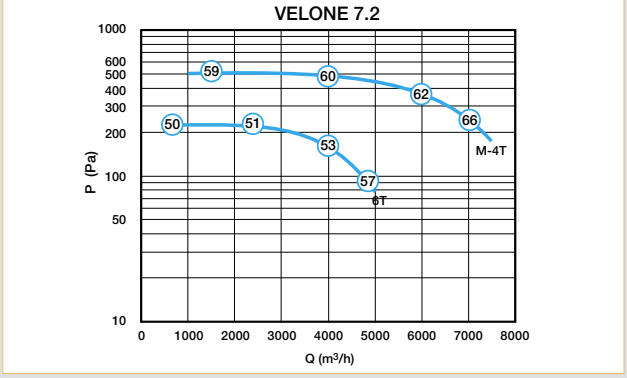

- Curves as per NF EN ISO 5801, intake connected (Ø 400 mm)
- Pressure levels indicated on curves = static pressure.
- The circled values correspond to a global sound pressure level in free air, at 6 m and weighted by A [Lp6m (dB(A))].

ELECTRICAL DETAILS

- Rated current is given for a voltage of 400V with 3-phase roof fans.
- 4/8 = Dahlander motor - 4/6 = Motor with independent windings (BI).
- 60 Hz power supply: contact us for more details.

Type	Number of poles	U (V)	P (kW)	f (Hz)	Rated current (A)	Id /In
7.2 M	4	230	1,1	50	7,6	7
7.2 -4 T	4	230/400	1,1	50/60	2,37	7
7.2 -6 T	6	230/400	0,37	50/60	1,09	4,7
7.2 -4/6T	4/6	400	1,1/0,3	50	3,02/1,43	5,4/4
7.2 -4/8T	4/8	400	1,2/0,3	50	2,92/1,29	5,5/3,1

Smoke and heat exhaust fans

VELONE smoke exhaust roof fans

VELONE F400 - 8.5 - 3-phase

VELONE basic - no options

ADVANTAGES

- *Accessories protected from impacts & weather conditions by the metal body.*
- *Electrical accessories hard-wired in the factory and mounted inside the cabinet to protect them against physical impacts and weather conditions.*
- *Pressure switch connected in factory.*
- *IPX4 certified rain hood kit.*
- *Pivot pin = easy cleaning.*

COMPLIANCE(S)

- *CE marking-compliant as per EN 12101-3.*
- *2-hour fire rating: F400 (120).*
- *All-in-one option with compliant accessories: backdraft damper and rain hood kit.*

RANGE

Designation	Reference	Discount family
with choice of options / VELONE 1-speed		
VELONE 8.5 - 6T 1.1KW	11021357	***08***
VELONE 8.5 - 8T 0.55KW	11021358	***08***
with choice of options / VELONE 2-speed		
VELONE 8.5 - 6/8T 1.1/0.55KW	11021380	***08***
VELONE 8.5 - 6/12T 1.1/0.22KW	11021381	***08***

DESCRIPTION

- Airflow between 500 and 8,500 m3/h at 200 Pa.

AVAILABLE CHOICE OF OPTIONS

- Aeraulically connected pressure switch, mounted and protected. For two-speed smoke extraction, two pressure switches are required.
- Hardwired proximity switch, mounted and protected.
- All-in-One solution (not available for single-phase systems):
- relay box delivered already wired,
- pressure switch & proximity switch supplied and wired in.
- On the 2-speed models, the AXONE box is supplied with a 2-metre cable for external connection to the roof fan. It is possible to use the stack base.
- If using a vertical kit, attach the relay box outside the VELONE unit and outside of the air flow (the supplied cable measures 2 meters).

Designation	Code
Pressure switch 40-300 Pa aeraulically connected	OPT21279
Pressure switch 100-1000 Pa aeraulically connected	OPT21280
1-speed switch -7.5 kW + contacts	OPT21281
2-speed switch -7.5 kW + contacts	OPT21282
All-in-One 1-speed smoke extraction 4.7A	OPT21273
All-in-One 2-speed Dahl smoke extraction	OPT21275
All-in-One 2-speed Dahl smoke extraction + comfort	OPT21276
All-in-One 2-speed BI smoke extraction	OPT21277
All-in-One 2-speed BI smoke extraction + comfort	OPT21278

ACCESSORIES

Description on following pages.

Designation	Reference	Discount family
Rain hood kit IPx4 8.5/13	11021287	***08***
Vertical kit 8.5/13	11021368	***08***
Sealed frame 8.5/13	11021292	***08***
Pivot pin 8.5/13	11021071	***08***
Backdraft damper 8.5/13	11021262	***08***
Duct-mounted frame 8.5/13	11021297	***08***
Roof stack base 8.5/13	11021087	***08***
Floor stack base 8.5/13	11021082	***08***

ELECTRICAL ACCESSORIES

- 3-phase autotransformer.
- Frequency controller.
- 2-speed comfort control box.

DIMENSIONS (MM) – WEIGHT (KG)

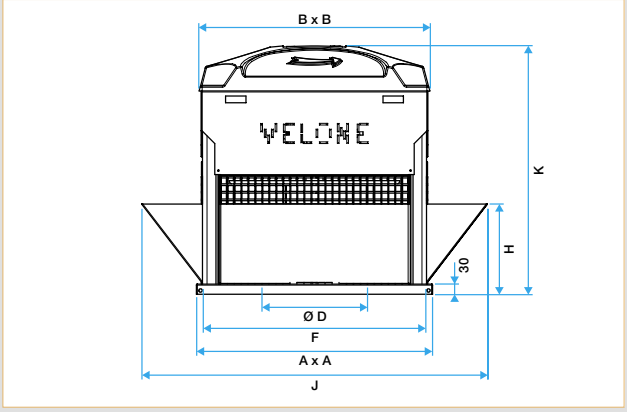

Type	Horizontal air outlet						With vertical kit		
Velone	A	B	Ø D	F	K	Weight	K	H	Weight
8.5	834	820	373	794	793	100	1270	355	116

AIRFLOW AND ACOUSTIC DETAILS

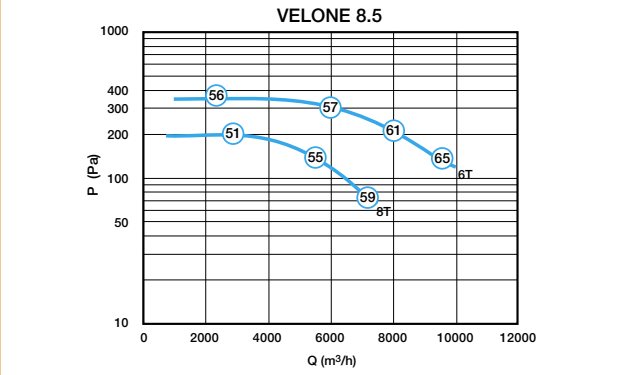

- Curves as per NF EN ISO 5801, intake connected (Ø 500 mm)
- Pressure levels indicated on curves = static pressure.
- The circled values correspond to a global sound pressure level in free air, at 6 m and weighted by A [Lp6m (dB(A))].

ELECTRICAL DETAILS

- Rated current is given for a voltage of 400V with 3-phase roof fans.
- 4/8 = Dahlander motor - 4/6 = Motor with independent windings (BI).
- 60 Hz power supply: contact us for more details.

Type	Number of poles	U (V)	P (kW)	f (Hz)	Rated current (A)	Id /In
8.5-6 T	6	230/400	1,1	50/60	2,9	5
8.5-8 T	8	230/400	0,55	50/60	2	4
8.5-6/8	6/8	400	1,1/0,55	50	3,59/2,52	5,1/4
8.5-6/12	6/12	400	1,1/0,22	50	4,39/1,5	5,5/2,6

Smoke and heat exhaust fans

VELONE smoke exhaust roof fans

VELONE F400 - 10.5 - 3-phase

VELONE basic - no options

With the 'All-In-One' option

ADVANTAGES

- *Accessories protected from impacts & weather conditions by the metal body.*
- *Electrical accessories hard-wired in the factory and mounted inside the cabinet to protect them against physical impacts and weather conditions.*
- *Pressure switch connected in factory.*
- *IPX4 certified rain hood kit.*
- *Pivot pin = easy cleaning.*

COMPLIANCE(S)

- *CE marking-compliant as per EN 12101-3.*
- *2-hour fire rating: F400 (120).*
- *All-in-one option with compliant accessories: backdraft damper and rain hood kit.*

RANGE

Designation	Reference	Discount family
VELONE STOCK 1-speed (with proximity switch)		
VELONE 10.5 - 8T 0.37KW + IP (stock)	11021259	***08***
VELONE 10.5 - 4T 1.5KW + IP (stock)	11021389	***08***
with choice of options / VELONE 1-speed		
VELONE 10.5 - 4T 1.5KW	11021353	***08***
VELONE 10.5 - 6T 0.55KW	11021354	***08***
VELONE 10.5 - 8T 0.37KW	11021355	***08***
with choice of options / VELONE 2-speed		
VELONE 10.5 - 4/6T 1.5/0.37KW	11021378	***08***
VELONE 10.5 - 4/8T 1.6/0.4KW	11021379	***08***

DESCRIPTION

- Airflow between 500 and 10,500 m³/h at 200 Pa.

AVAILABLE CHOICE OF OPTIONS

Designation	Code
Pressure switch 40-300 Pa aeraulically connected	OPT21279
Pressure switch 100-1000 Pa aeraulically connected	OPT21280
1-speed switch -7.5 kW + contacts	OPT21281
2-speed switch -7.5 kW + contacts	OPT21282
All-in-One 1-speed smoke extraction	OPT21273
All-in-One 2-speed Dahl smoke extraction	OPT21275
All-in-One 2-speed Dahl smoke extraction + comfort	OPT21276
All-in-One 2-speed BI smoke extraction	OPT21277
All-in-One 2-speed BI smoke extraction + comfort	OPT21278

ACCESSORIES

Description on following pages.

Designation	Reference	Discount family
Rain guard kit IPx4 - 4.5/7.2/10.5	11021286	***08***
Vertical kit 4.5/7.2/10.5	11021367	***08***
Sealed frame 4.5/7.2/10.5	11021291	***08***
Pivot pin 4.5/7.2/10.5	11021070	***08***
Backdraft damper 4.5/7.2/10.5	11021261	***08***
Duct-mounted frame 4.5/7.2/10.5	11021296	***08***
Floor stack base 4.5/7.2/10.5	11021081	***08***
Roof stack base 4.5/7.2/10.5	11021086	***08***

ELECTRICAL ACCESSORIES

- 3-phase autotransformer.
- Frequency controller.
- 2-speed comfort control box.

DIMENSIONS (MM) – WEIGHT (KG)

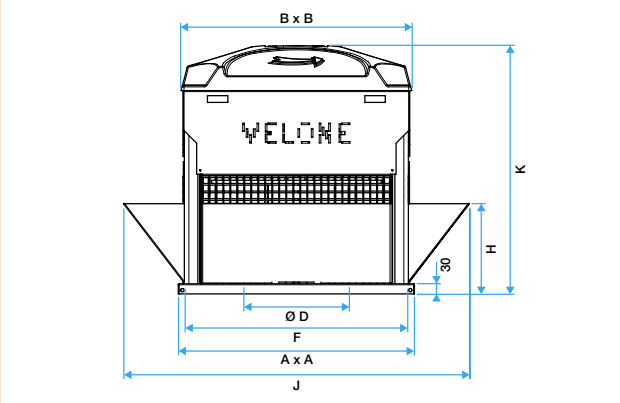

Type	Horizontal air outlet						With vertical kit		
Velone	A	B	Ø D	F	K	Weight	J	H	Weight
10.5	698	684	332	658	721	72	991	265	82

AIRFLOW AND ACOUSTIC DETAILS

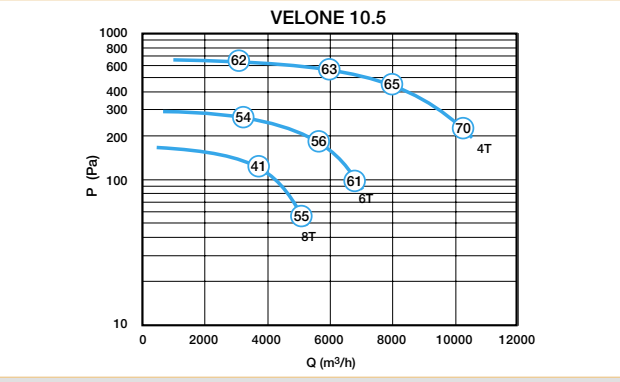

- Curves as per NF EN ISO 5801, intake connected (Ø 450 mm).
- Pressure levels indicated on curves = static pressure.
- The circled values correspond to a global sound pressure level in free air, at 6 m and weighted by A [Lp6m (dB(A))].

ELECTRICAL DETAILS

- Rated current is given for a voltage of 400V with 3-phase roof fans.
- 4/8 = Dahlander motor - 4/6 = Motor with independent windings (BI).
- 60 Hz power supply: contact us for more details.

Type	Number of poles	U (V)	P (kW)	f (Hz)	Rated current (A)	Id /In
10.5-4 T	4	230/400	1,5	50/60	3,30	7,5
10.5-6 T	6	230/400	0,55	50/60	1,57	4,8
10.5-8 T	8	230/400	0,37	50/60	1,40	4
10.5-4/6T	4/6	400	1,5/0,37	50	3,71/1,73	5,6/3,8
10.5-4/8T	4/8	400	1,6/0,4	50	4,05/1,78	5,7/4,1

Smoke and heat exhaust fans

VELONE smoke exhaust roof fans

VELONE F400 - 13.0 - 3-phase

VELONE basic - no options

ADVANTAGES

- *Accessories protected from impacts & weather conditions by the metal body.*
- *Electrical accessories hard-wired in the factory and mounted inside the cabinet to protect them against physical impacts and weather conditions.*
- *Pressure switch connected in factory.*
- *IPX4 certified rain hood kit.*
- *Pivot pin = easy cleaning.*

COMPLIANCE(S)

- *CE marking-compliant as per EN 12101-3.*
- *2-hour fire rating: F400 (120).*
- *All-in-one option with compliant accessories: backdraft damper and rain hood kit.*

RANGE

Designation	Reference	Discount family
with choice of options / VELONE 1-speed		
VELONE 13 - 6T 2.2KW	11021359	***08***
VELONE 13 - 8T 1.1KW	11021360	***08***
with choice of options / VELONE 2-speed		
VELONE 13 - 6/8T 2.2/1.3KW	11021382	***08***
VELONE 13 - 6/12T 2.2/0.55KW	11021383	***08***

DESCRIPTION

- Airflow between 1000 and 13,000 m3/h at 200 Pa.

AVAILABLE CHOICE OF OPTIONS

- Aeraulically connected pressure switch, mounted and protected. For two-speed smoke extraction, two pressure switches are required.
- Hardwired proximity switch, mounted and protected.
- All-in-One solution (not available for single-phase systems):
- relay box delivered already wired,
- pressure switch & proximity switch supplied and wired in.
- On the 2-speed models, the AXONE box is supplied with a 2-metre cable for external connection to the roof fan. It is possible to use the stack base.
- If using a vertical kit, attach the relay box outside the VELONE unit and outside of the air flow (the supplied cable measures 2 meters).

Designation	Code
Pressure switch 40-300 Pa aeraulically connected	OPT21279
Pressure switch 100-1000 Pa aeraulically connected	OPT21280
1-speed switch -7.5 kW + contacts	OPT21281
2-speed switch -7.5 kW + contacts	OPT21282
All-in-One 1-speed smoke extraction 4.7A	OPT21273
All-in-One 1-speed smoke extraction 16.7A	OPT21273
All-in-One 2-speed Dahl smoke extraction	OPT21275
All-in-One 2-speed Dahl smoke extraction + comfort	OPT21276
All-in-One 2-speed BI smoke extraction	OPT21277
All-in-One 2-speed BI smoke extraction + comfort	OPT21278

ACCESSORIES

Description on following pages.

Designation	Reference	Discount family
Rain hood kit IPx4 8.5/13	11021287	***08***
Vertical kit 8.5/13	11021368	***08***
Sealed frame 8.5/13	11021292	***08***
Pivot pin 8.5/13	11021071	***08***
Backdraft damper 8.5/13	11021262	***08***
Duct-mounted frame 8.5/13	11021297	***08***
Roof stack base 8.5/13	11021087	***08***
Floor stack base 8.5/13	11021082	***08***

ELECTRICAL ACCESSORIES

- 3-phase autotransformer.
- Frequency controller.
- 2-speed comfort control box.

DIMENSIONS (MM) – WEIGHT (KG)

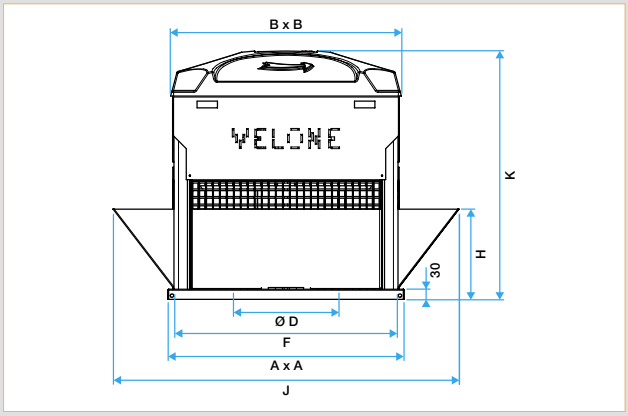

Type	Horizontal air outlet						With vertical kit		
Velone	A	B	Ø D	F	K	Weight	J	H	Weight
13.0	834	820	419	794	833	115	1270	355	131

AIRFLOW AND ACOUSTIC DETAILS

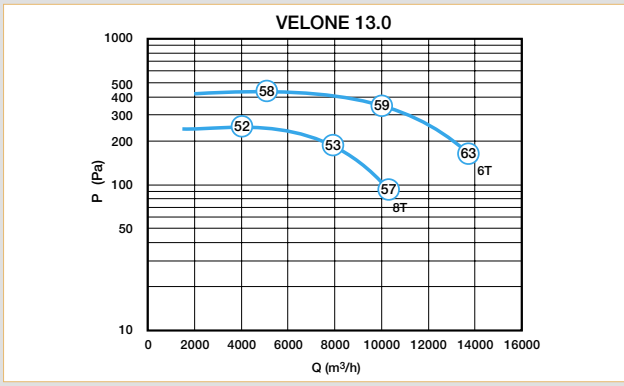

- Curves as per NF EN ISO 5801, intake connected (Ø 560 mm).
- Pressure levels indicated on curves = static pressure.
- The circled values correspond to a global sound pressure level in free air, at 6 m and weighted by A [Lp6m (dB(A))].

ELECTRICAL DETAILS

- Rated current is given for a voltage of 400V with 3-phase roof fans.
- 6/12 = Dahlander motor - 6/8 = Motor with independent windings (BI).
- 60 Hz power supply: contact us for more details.

Type	Number of poles	U (V)	P (kW)	f (Hz)	Rated current (A)	Id /In
13.0 -6T	6	230/400	2,2	50/60	5,26	6,2
13.0 -8T	8	230/400	1,1	50/60	3,3	4,2
13.0 -6/8T	6/8	400	2,2/1,3	50/60	5,96/4,36	5,6/3,9
13.0-6/12T	6/12	400	2,2/0,55	50/60	6,4/2,6	7/3

Smoke and heat exhaust fans

VELONE smoke exhaust roof fans

VELONE F400 - 20.0 - 3-phase

VELONE basic - no options

With the 'All-In-One' option

ADVANTAGES

- *Accessories protected from impacts & weather conditions by the metal body.*
- *Electrical accessories hard-wired in the factory and mounted inside the cabinet to protect them against physical impacts and weather conditions.*
- *Pressure switch connected in factory.*
- *IPX4 certified rain hood kit.*
- *Pivot pin = easy cleaning.*

COMPLIANCE(S)

- *CE marking-compliant as per EN 12101-3.*
- *2-hour fire rating: F400 (120).*
- *All-in-one option with compliant accessories: backdraft damper and rain hood kit.*

RANGE

Designation	Reference	Discount family
with choice of options / VELONE 1-speed		
VELONE 20 - 6T 3KW	11021361	***08***
VELONE 20 - 8T 1.5KW	11021362	***08***
with choice of options / VELONE 2-speed		
VELONE 20 - 6/8T 4/1.1KW	11021384	***08***
VELONE 20 - 6/12T 3/0.55KW	11021385	***08***

DESCRIPTION

- Airflow between 1000 and 20,000 m3/h at 200 Pa.

AVAILABLE CHOICE OF OPTIONS

- Aeraulically connected pressure switch, mounted and protected. For two-speed smoke extraction, two pressure switches are required.
- Hardwired proximity switch, mounted and protected.
- All-in-One solution (not available for single-phase systems):
- relay box delivered already wired,
- pressure switch & proximity switch supplied and wired in.
- On the 2-speed models, the AXONE box is supplied with a 2-metre cable for external connection to the roof fan. It is possible to use the stack base.
- If using a vertical kit, attach the relay box outside the VELONE unit and outside of the air flow (the supplied cable measures 2 meters).

Designation	Code
Pressure switch 40-300 Pa aeraulically connected	OPT21279
Pressure switch 100-1000 Pa aeraulically connected	OPT21280
1-speed switch -7.5 kW + contacts	OPT21281
2-speed switch -7.5 kW + contacts	OPT21282
All-in-One 1-speed smoke extraction	OPT21273
All-in-One 2-speed Dahl smoke extraction	OPT21275
All-in-One 2-speed Dahl smoke extraction + comfort	OPT21276
All-in-One 2-speed BI smoke extraction	OPT21277
All-in-One 2-speed BI smoke extraction + comfort	OPT21278

ACCESSORIES

Description on following pages.

Designation	Reference	Discount family
Rain-guard kit IP x4 - 20/27	11021288	***08***
Vertical kit 20/27	11021369	***08***
Sealed frame 20/27	11021293	***08***
Pivot pin 20/27	11021072	***08***
Backdraft damper 20/27	11021263	***08***
Duct-mounted frame 20/27	11021298	***08***
Floor stack base 20/27	11021083	***08***
Roof stack base 20/27	11021088	***08***

ELECTRICAL ACCESSORIES

- 3-phase autotransformer.
- Frequency controller.
- 2-speed comfort control box.

DIMENSIONS (MM) – WEIGHT (KG)

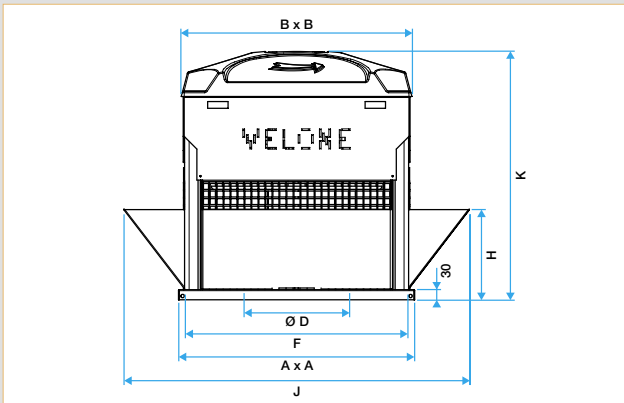

Type	Horizontal air outlet						With vertical kit		
Velone	A	B	Ø D	F	K	Weight	J	H	Weight
20.0	984	970	474	944	983	165	1555	440	189

AIRFLOW AND ACOUSTIC DETAILS

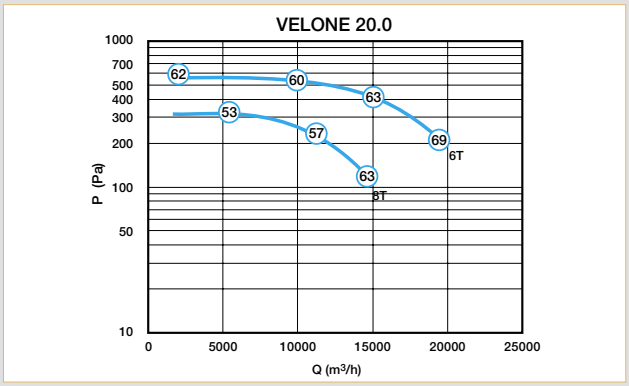

- Curves as per NF EN ISO 5801, intake connected (Ø 630 mm)
- Pressure levels indicated on curves = static pressure.
- The circled values correspond to a global sound pressure level in free air, at 6 m and weighted by A [Lp6m (dB(A))].

ELECTRICAL DETAILS

- Rated current is given for a voltage of 400V with 3-phase roof fans.
- 6/12 = Dahlander motor - 6/8 = Motor with independent windings (BI).
- 60 Hz power supply: contact us for more details.

Type	Number of poles	U (V)	P (kW)	f (Hz)	Rated current (A)	Id /In
20.0 -6T	6	230/400	3	50/60	6,8	6
20.0 -8T	8	230/400	1,5	50/60	4	5,4
20.0 -6/8T	6/8	400	4/1,1	50/60	11,3/4,84	6,6/4,6
20.0-6/12T	6/12	400	3/0,55	50/60	6,77/2,3	8,5/4,3

Smoke and heat exhaust fans

VELONE smoke exhaust roof fans

VELONE F400 - 27.0 - 3-phase

VELONE basic - no options

ADVANTAGES

- *Accessories protected from impacts & weather conditions by the metal body.*
- *Electrical accessories hard-wired in the factory and mounted inside the cabinet to protect them against physical impacts and weather conditions.*
- *Pressure switch connected in factory.*
- *IPX4 certified rain hood kit.*
- *Pivot pin = easy cleaning.*

COMPLIANCE(S)

- *CE marking-compliant as per EN 12101-3.*
- *2-hour fire rating: F400 (120).*
- *All-in-one option with compliant accessories: backdraft damper and rain hood kit.*

RANGE

Designation	Reference	Discount family
with choice of options / VELONE 1-speed		
VELONE 27 - 6T 5.5KW	11021363	***08***
VELONE 27 - 8T 3KW	11021364	***08***

DESCRIPTION

- Airflow between 1000 and 27,000 m3/h at 200 Pa.

AVAILABLE CHOICE OF OPTIONS

- Aeraulically connected pressure switch, mounted and protected. For two-speed smoke extraction, two pressure switches are required.
- Hardwired proximity switch, mounted and protected.
- All-in-One solution (not available for single-phase systems):
- relay box delivered already wired,
- pressure switch & proximity switch supplied and wired in.
- If using a vertical kit, attach the relay box outside the VELONE unit and outside of the air flow (the supplied cable measures 2 meters).

Designation	Code
Pressure switch 40-300 Pa aeraulically connected	OPT21279
Pressure switch 100-1000 Pa aeraulically connected	OPT21280
All-in-One 1-speed smoke extraction 16.7 A	OPT21274
1-speed switch -7.5 kW + contacts	OPT21281

ACCESSORIES

Description on following pages.

Designation	Reference	Discount family
Rain-guard kit IP x4 - 20/27	11021288	***08***
Vertical kit 20/27	11021369	***08***
Sealed frame 20/27	11021293	***08***
Pivot pin 20/27	11021072	***08***
Backdraft damper 20/27	11021263	***08***
Duct-mounted frame 20/27	11021298	***08***
Floor stack base 20/27	11021083	***08***
Roof stack base 20/27	11021088	***08***

ELECTRICAL ACCESSORIES

- 3-phase autotransformer.
- Frequency controller.

DIMENSIONS (MM) – WEIGHT (KG)

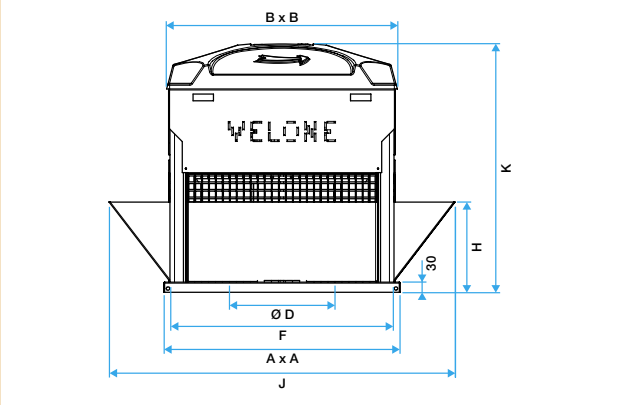

Type	Horizontal air outlet						With vertical kit		
Velone	A	B	Ø D	F	K	Weight	J	H	Weight
27.0	984	970	535	944	1034	175	1555	440	207

AIRFLOW AND ACOUSTIC DETAILS

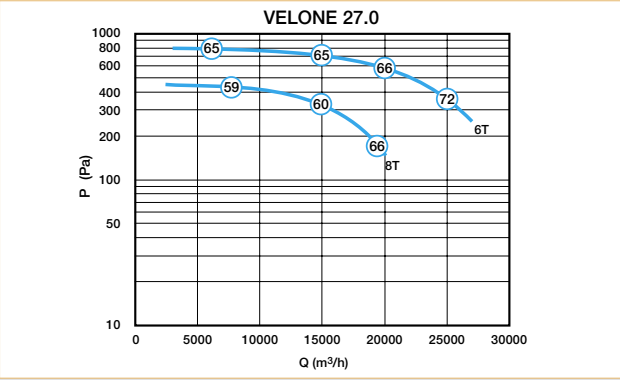

- Curves as per NF EN ISO 5801, intake connected (Ø 630 mm)
- Pressure levels indicated on curves = static pressure.
- The circled values correspond to a global sound pressure level in free air, at 6 m and weighted by A [Lp6m (dB(A))].

ELECTRICAL DETAILS

- Rated current is given for a voltage of 400V with 3-phase roof fans.

Type	Number of poles	U (V)	P (kW)	f (Hz)	Rated current (A)	Id /In
27.0 -6T	6	230/400	5,5	50/60	12,4	6,8
27.0 -8T	8	230/400	3	50/60	6,8	6

VELONE IPX4 rain hood kit

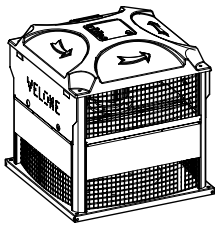

ADVANTAGES

• Solution to prevent ingress of water in ducts during bad weather.

COMPLIANCE(S)

• CE marking-compliant.
• F400° - 2-hours as per EN 12101-3.
• IPX4 rating: Tested in an independent laboratory.

RANGE

Designation	Reference	Discount family
Rain hood kit IPx4 1.2/1.5/3.2	11021285	***08***
Rain hood kit IPx4 20/27	11021286	***08***
Rain hood kit IPx4 4.5/7.2/10.5	11021287	***08***
Rain hood kit IPx4 8.5/13	11021288	***08***

DESCRIPTION

• The VELONE roof fan equipped with the rain hood was tested by an independent lab and awarded an IPX4 rating, certified by the CETIAT lab (test report available on request).
• This corresponds to the protection rating commonly used for electrical equipment: switch, pressure switch, relay box, etc. The first digit concerns protection against solid particles (here «X» as it does not concern a roof fan). The second digit is the liquid ingress protection rating: «4» guarantees that the equipment is protected against water splashing against it from any direction (half-sphere) with a volume of 600 litres per hour.
• 4 lengths of M0 fabric, reinforced on one side by a metal strip.
• When the fan is running, the four sections lift away and do not produce significant pressure loss.
• Requires fitting on-site.
• Incompatible with the vertical outlet kit.

FIELD OF APPLICATION

• The rain hood kit prevents rain entering the ducts during bad weather, when the fan is stopped. Remember that a pure smoke exhaust roof fan is most often stopped. The rain hood kit is much more effective than a vertical outlet kit.

VELONE vertical outlet kit

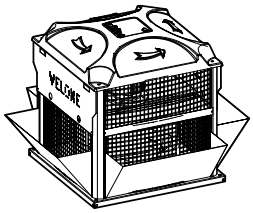

COMPLIANCE(S)

• CE marking-compliant.
• F400° - 2-hours as per EN 12101-3.

RANGE

Designation	Reference	Discount family
Vertical kit 1.2/1.5/3.2	11021366	***08***
Vertical kit 20/27	11021367	***08***
Vertical kit 4.5/7.2/10.5	11021368	***08***
Vertical kit 8.5/13	11021369	***08***

DESCRIPTION

• Comprises four lengths of galvanised steel
• Supplied with suitable fastening accessories.

FIELD OF APPLICATION

• The vertical outlet kit is a deflector, used to redirect the airflow into a vertical plane.
• Caution: it is not compatible with the rain hood kit.
• Caution: use of the vertical outlet kit and the All-In-One solution means that the relay box must be moved out of the airflow.

VELONE mounting frame

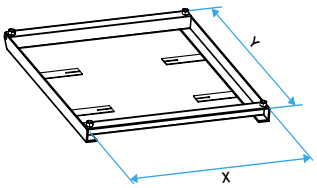

RANGE

Designation	Reference	Discount family
Sealed frame 1.2/1.5/3.2	11021290	***08***
Sealed frame 4.5/7.2/10.5	11021291	***08***
Sealed frame 8.5/13	11021292	***08***
Sealed frame 20/27	11021293	***08***

DESCRIPTION

- Comprises four folding pads which can be sealed on to the stack base.
- Anti-corrosion paint.
- Supplied with fastening accessories.
- Can be fitted with the pivot pin.

FIELD OF APPLICATION

- Used to attach the roof fan to a masonry stack base.

Backdraft damper VELONE

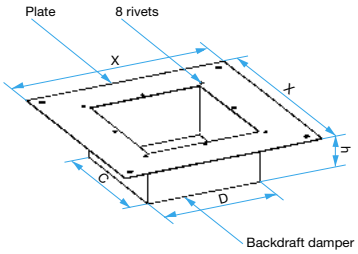

COMPLIANCE(S)

- *CE marking-compliant.*
- *F400° - 2-hours as per EN 12101-3.*

RANGE

Designation	Reference	Discount family
Backdraft damper 1.2/1.5/3.2	11021260	***08***
Backdraft damper 4.5/7.2/10.5	11021261	***08***
Backdraft damper 8.5/13	11021262	***08***
Backdraft damper 20/27	11021263	***08***

DIMENSIONS (MM)

Reference	C	D	X	h
11021260	380	350	519	120
11021261	480	520	684	120
11021262	580	602	820	120
11021263	780	802	970	120

DESCRIPTION

- The backdraft damper has passed its fire tests.
- Can be installed in just a few seconds with the stacking plate.
- Can be dismantled and easily added at a later date.
- Factor in an additional pressure loss of 50 Pa.

FIELD OF APPLICATION

- The backdraft damper prevents natural ventilation when the roof fan is in standby mode, thereby making savings on heating and/or air conditioning.
- The backdraft damper can be fitted using the mounting frame, the pivot pin and the stack base.
- Not compatible with duct-mounted frame.

VELONE pivot pin

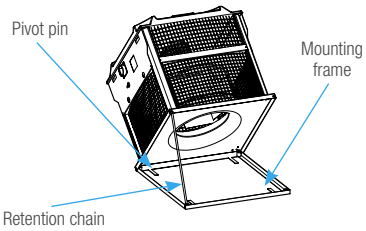

RANGE

Designation	Reference	Discount family
Pivot pin 1.2/1.5/3.2	11021069	***08***
Pivot pin 4.5/7.2/10.5	11021070	***08***
Pivot pin 8.5/13	11021071	***08***
Pivot pin 20/27	11021072	***08***

DESCRIPTION

- Stainless steel pin which slides through the fan base and the mounting frame.
- Requires the mounting frame.
- Two lock washers and a retention chain.
- IMPORTANT: immobilise the fan when open to prevent accidents.

FIELD OF APPLICATION

- Hinge pin used to provide access to the duct and fan impeller to facilitate maintenance.

VELONE duct-mounted frame

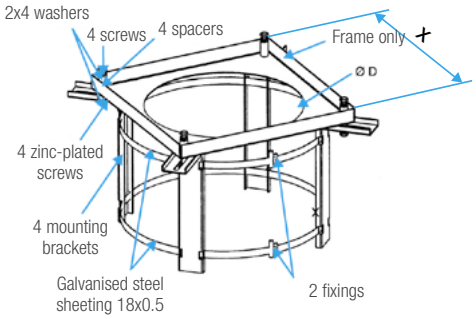

RANGE

Designation	Reference	Discount family
Cadre sur conduit 1.2/1.5/3.2	11021295	***08***
Cadre sur conduit 4.5/7.2/10.	11021296	***08***
Cadre sur conduit 8.5/13	11021297	***08***
Cadre sur conduit 20/27	11021298	***08***

DIMENSIONS (MM)

	X	Ø D	Duct	
			Ø mini	**Ø maxi**
11021295	519	420	250	450
11021296	684	520	315	500
11021297	810	650	400	630
11021298	970	820	500	800

DESCRIPTION

- Comprises four brackets, a frame, four spacers and the required fastening accessories.

FIELD OF APPLICATION

- The duct-mounted frame is used to install a VELONE roof fan on a cylindrical duct capable of supporting its weight.

Stack base - VELONE roof base

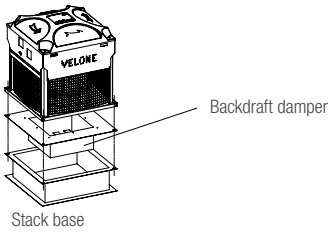

RANGE

Designation	Reference	Discount family
Stack base H = 330 mm		
Floor stack base H330 1.2/1.5/3.2	11021080	*08*
Floor stack base H330 4.5/7.2/10.5	11021082	*08*
Floor stack base H330 8.5/13	11021083	*08*
Floor stack base H330 20/27	11021081	*08*
Stack base H = 500 mm		
Floor stack base H500 1.2/1.5/3.2	11021140	*08*
Floor stack base H500 4.5/7.2/10.5	11021141	*08*
Floor stack base H500 8.5/13	11021142	*08*
Floor stack base H500 20/27	11021143	*08*
Roof base: define roof angle		
Roof base 1.2/1.5/3.2	11021085	*08*
Roof base 4.5/7.2/10.5	11021086	*08*
Roof stack base 8.5/13	11021087	*08*
Roof stack base 20/27	11021088	*08*

DESCRIPTION

- Galvanised steel.
- Compatible with the backdraft damper.
- For the roof base, specify the roof angle as a percentage or in degrees when ordering.

ENCOMBREMENT (mm)

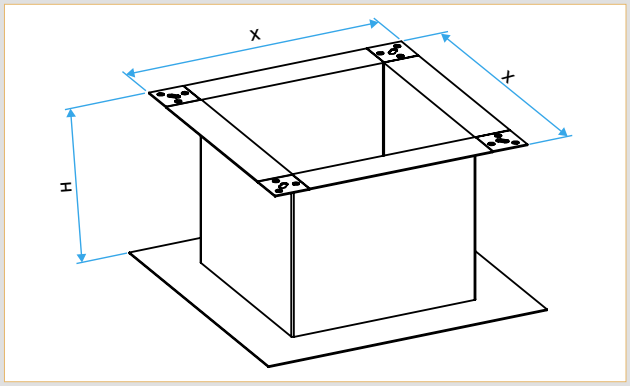

Modèle souche	X
Stack base 1.2/1.5/3.2	526
Stack base 4.5/7.2/10.5	691
Stack base 8.5/13	827
Stack base 20/27	977

FIELD OF APPLICATION

- The stack base is used to install a roof fan on a horizontal roof with no stonework base.
- The roof base is used to install a roof fan on a sloping roof with no stonework base.

SOS VELONE 4.5/7.2 roof fan for residential applications.

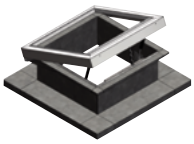

SOS VELONE in standby position

SOS VELONE in safety position

ADVANTAGES

• SOS VELONE uses no other power supply than that of the ORDONE panel or the Fire safety control system.
• Small dimensions: only 30 cm high.
• Simple to install.

COMPLIANCE(S)

• Article 37 of administrative order of 31 January 1986 amended.

RANGE

Designation	Reference	Discount family
SOS VELONE 4.5/7.2/10.5 ROOF BASE KIT	11021498	*08*
SOS VELONE 4.5/7.2/10.5 EXTENSION KIT	11021496	*08*
SOS VELONE 4.5/7.2/10.5 STACK BASE KIT	11021497	*08*

DESCRIPTION

- SOS VELONE is designed to meet the requirements of the administrative order of 321 January 1986 and is used for smoke extraction from horizontal passageways in residential buildings.
- Article 37 stipulates that: «The smoke exhaust system must operation via natural draw in the event of failure of the fan unit. To meet this requirement, the exhaust ducts must feature a a device on their upper ends that opens into the outside air, with an air passage equal to that of the duct (20 dm2). The device must be actuated by a fan unit operating fault.»

INSTALLATION

- SOS VELONE is designed to:
- cap a duct with the extended version,
- be installed on a flat roof with the stack base,
- be installed on a sloping roof with the roof base (angle or gradient of slope required).
- The VELONE 4.5 or 7.2 smoke exhaust roof fan is a perfect fit over the SOS VELONE unit. It is fixed in place at each corner using the screws supplied.

DIMENSIONS (MM)

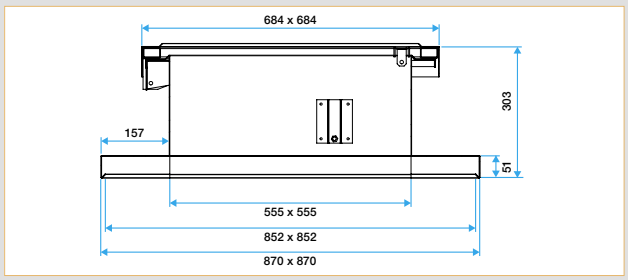

SOS Velone roof base kit

SOS Velone floor stack base kit

SOS Velone «extended» kit

Smoke and heat exhaust fans

HELIONE axial fans

Presentation of the new HELIONE range of axial fans

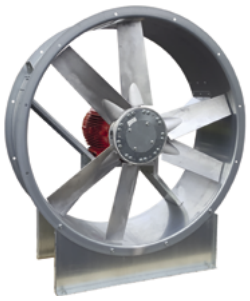

HELIONE short casing

PRODUCT ADVANTAGES

- Wide range for car parks, non-residential and industrial buildings.
- Numerous accessories to make implementation easier.

COMPLIANCE

- F400-120 and F200-120 classification.
- CE compliant.

DESCRIPTION

- The standard HELIONE range covers Ø 315 to Ø 1250 mm for airflows of 1,500 to 120,000 m³/h and pressures of 100 to 600 Pa.
- Ø greater than 1250 mm: contact us.
- Impellers: made up of several aluminium blades, mounted on an aluminium hub. The pitch angle is determined by the operation point.
- Blades: x-rayed individually prior to assembly to check the quality of the material.
- Casings: cast from a metal plate, with built-in dropped edges and drill-holes for continuously-welded connections, hot-galvanised after manufacture to improve their service life. Standard = short casing, optional long casing.
- Motor fixing arms: hot-galvanised to improve corrosion resistance.
- Motors: boss-type, 4 poles or 4/8 poles (2 poles on request), IP55, Class F insulation as standard. Operating temperature -20°C/+50°C.
  60 Hz motor: contact us. All motors are designed to withstand the power absorbed the entire length of the curve.

SCOPE

- Ventilation and/or smoke and heat exhaust of rooms in residential (car parks, staircases), non-residential (car parks, shops) and industrial buildings.
- Exhaust/fresh air intake in rooms where acoustic requirements are not key or only require occasional smoke and heat exhaust.

AVAILABLE OPTIONS

- Long casing: includes an external, pre-wired terminal box.

DIMENSIONS (MM)

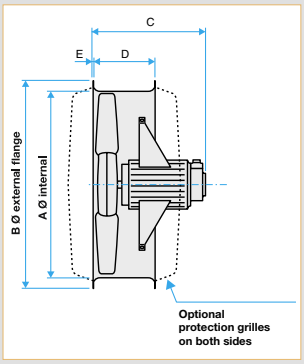

Short casing

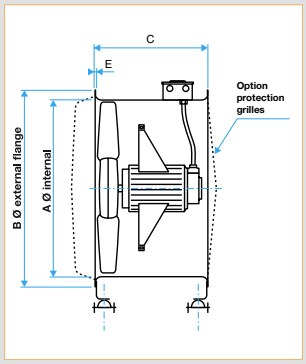

Virole longue

Your ALDES branch will also be able to provide you with detailed technical data sheets for each model.

A (mm)	B (mm)	Fan power (kW)	C (mm)	D (mm)	C (mm)
			Short casing		Long casing
350	425	0,12 ; 0,18 ; 0,25 ; 0,37 ; 0,55 ; 0,75 ; 1,1 ; 1,5	460	254	350
400	470	0,12 ; 0,18 ; 0,25 ; 0,37 ; 0,55 ; 0,75 ; 1,1 ; 1,5 ; 2,2 ; 3	485	254	440
450	520	0,12 ; 0,18 ; 0,25 ; 0,37 ; 0,55 ; 0,75 ; 1,1 ; 1,5 ; 2,2 ; 3 ; 4	485	254	440
500	572	0,12 ; 0,18 ; 0,25 ; 0,37 ; 0,55 ; 0,75 ; 1,1 ; 1,5 ; 2,2 ; 3 ; 4	485	254	440
		5,5 ; 7,5 ; 9,2	630	425	600
560	626	0,25 ; 0,37 ; 0,55 ; 0,75 ; 1,1 ; 1,5 ; 2,2 ; 3 ; 4	485	254	440
		5,5 ; 7,5 ; 9,2	630	425	600
630	704	0,12 ; 0,18 ; 0,25 ; 0,37 ; 0,55 ; 0,75 ; 1,1 ; 1,5 ; 2,2 ; 3 ; 4	485	254	440
		5,5 ; 7,5 ; 9,2	595	425	600
		11 ; 15 ; 18,5 ; 22	595	425	675
710	780	0,55 ; 0,75 ; 1,1 ; 1,5 ; 2,2 ; 3 ; 4	485	254	440
		5,5 ; 7,5 ; 9,2 ; 11 ; 15	595	425	675
800	885	0,55 ; 0,75 ; 1,1 ; 1,5 ; 2,2 ; 3 ; 4	485	254	440
		5,5 ; 7,5 ; 9,2 ; 11 ; 15	700	425	675
900	990	0,75 ; 1,1 ; 1,5 ; 2,2 ; 3 ; 4 ; 5,5 ; 7,5 ; 9,2 ; 11 ; 15	745	425	675
		18,5 ; 22	745	425	800
1000	1090	0,75 ; 1,1 ; 1,5 ; 2,2 ; 3 ; 4 ; 5,5 ; 7,5 ; 9,2 ; 11 ; 15	755	425	675
		18,5 ; 22	755	425	800
		30 ; 35	860	600	865
1120	1230	2,2 ; 3 ; 4 ; 5,5 ; 7,5 ; 9,2 ; 11 ; 15 ; 18,5 ; 22	760	465	800
		30 ; 35 ; 37 ; 45	760	665	1010
		55	1040	800	1010
1250	1375	2,2 ; 3 ; 4 ; 5,5 ; 7,5 ; 9,2 ; 11 ; 15 ; 18,5 ; 22	760	465	800
		30 ; 35 ; 37 ; 45	1010	665	1010
		55	1215	800	1010

Presentation of the new HELIONE range of axial fans

HELIONE long casing

ACCESSORIES

Required with flexible sleeve.

- Counter-flange made of galvanised steel to connect the HELIONE to a circular duct.
- Galvanised steel square plate for fixing HELIONE onto the face of a wall.
- Stands (x2) made of galvanised steel to fix HELIONE.
- Anti-vibration pads (x4) to fix under the stand.
- Non-return damper: circular, two galvanised steel blades.
- Passive rectangular silencer or baffles (consult us for passive circular silencer).
- Inlet nozzle: improved flow rate and acoustic performances
- Electrical accessories:
  - Proximity switch,
  - Pressure switch,
  - Emergency stop button.
  - Safety box : see AXONE Micro II.

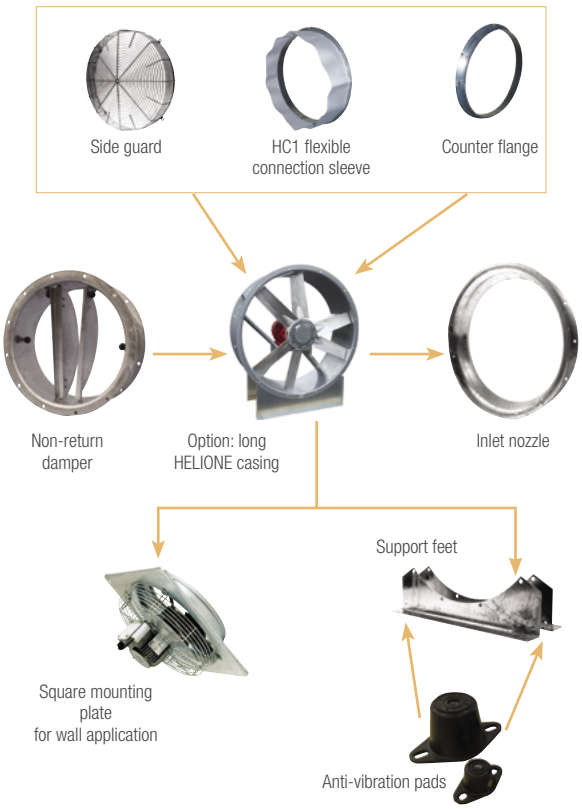

IMPLEMENTATION

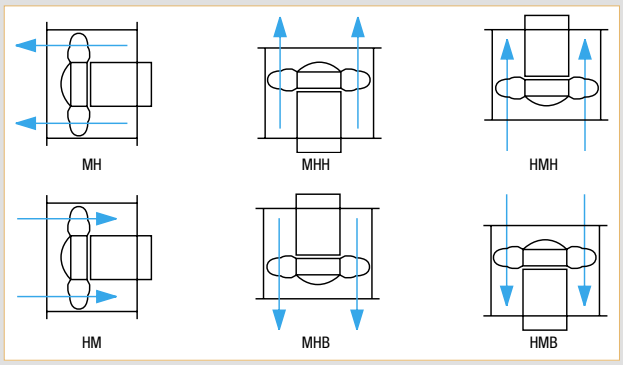

MOUNTING MH OR HM:

Horizontal to ground and onto the face of a wall:

- Essential options: economy square plate and stands and anti-vibration pads, counter flanges and flexible sleeves or grille if not connected.

Horizontal to ground between two ducts:

- Essential options required: stands and anti-vibration pads, counter flanges and flexible sleeves on both sides, long casing for access to the motor through an inspection hatch.

Horizontal fixed onto the face of a wall:

- Essential options: reinforced square plate for wall mounting, counter-flange and flexible sleeve or grille if not connected.

MOUNTING MHH, HMH, MHB OR HMB:

Vertical suspended under slab or to duct:

The casing must be bolted in place using all flange holes.

- Essential options: protective grille if access remains possible or if there is a risk of intake of waste. If connected on both sides: long casing for access to motor via inspection hatch. For vertical mountings, possibility to add the gusset option (consult us).

HELIONE accessories

DESCRIPTION

- Side guard on fan blades and motor.
- Flexible sleeve fitted between counter-flange and circular duct. M0 Fabric.
- Counter-flange made of galvanised steel to connect the HELIONE to a circular duct. Required with flexible sleeve.
- Galvanised steel square plate for fixing HELIONE onto the face of a wall.
- Support feet (x2) made of galvanised steel to fix HELIONE.
- Anti-vibration pads (x4) to fix under the stand.
- Non-return damper: circular: 2 galvanised steel flaps.
- Passive rectangular silencer or baffles (consult us for passive circular silencer).

- Electrical accessories not connected:
  - Proximity switch, pressure switch, emergency stop button : see Electrical accessoris.
  - Safety box: see AXONE Micro II.
  - Car Parc boxes: see Residential Car Park page.

LAYOUT DIAGRAM

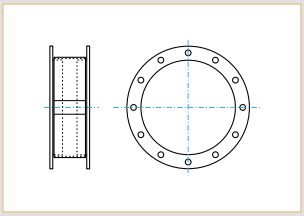

Counter flange and sleeve

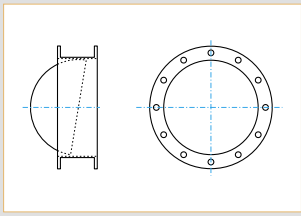

Non-return damper

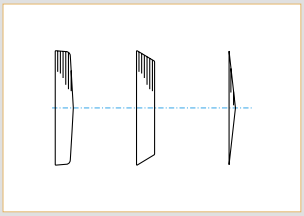

Motor guards

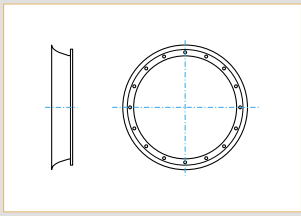

Inlet nozzle

ACCESSORIES

Description	Reference	Discount family
315		
Non-return damper	11090567	***08***
Counter flange	11090528	***08***
Fan guard	11090580	***08***
Motor guards	11090593	***08***
Set of 2 support feet	11090515	***08***
Flexible sleeve	11090541	***08***
Inlet unit	11090554	***08***
Square plate	11090606	***08***
350		
Non-return damper	11090568	***08***
Counter flange	11090529	***08***
Fan guard	11090581	***08***
Motor guards	11090594	***08***
Set of 2 support feet	11090516	***08***
Flexible sleeve	11090542	***08***
Inlet unit	11090555	***08***
Square plate	11090607	***08***
400		
Non-return damper	11090569	***08***
Counter flange	11090530	***08***
Fan guard	11090582	***08***
Motor guards	11090595	***08***
Set of 2 support feet	11090517	***08***
Flexible sleeve	11090543	***08***
Inlet unit	11090556	***08***
Square plate	11090608	***08***

Description	Reference	Discount family
450		
Non-return damper	11090570	***08***
Counter flange	11090531	***08***
Fan guard	11090583	***08***
Motor guards	11090596	***08***
Set of 2 support feet	11090518	***08***
Flexible sleeve	11090544	***08***
Inlet unit	11090557	***08***
Square plate	11090609	***08***
500		
Non-return damper	11090571	***08***
Counter flange	11090532	***08***
Fan guard	11090584	***08***
Motor guards	11090597	***08***
Set of 2 support feet	11090519	***08***
Flexible sleeve	11090545	***08***
Inlet unit	11090558	***08***
Square plate	11090610	***08***
560		
Non-return damper	11090572	***08***
Counter flange	11090533	***08***
Fan guard	11090585	***08***
Motor guards	11090598	***08***
Set of 2 support feet	11090520	***08***
Flexible sleeve	11090546	***08***
Inlet unit	11090559	***08***
Square plate	11090611	***08***

Description	Reference	Discount family
630		
Non-return damper	11090573	***08***
Counter flange	11090534	***08***
Fan guard	11090586	***08***
Motor guards	11090599	***08***
Set of 2 support feet	11090521	***08***
Flexible sleeve	11090547	***08***
Inlet unit	11090560	***08***
Square plate	11090612	***08***
700		
Non-return damper	11090574	***08***
Counter flange	11090535	***08***
Fan guard	11090587	***08***
Motor guards	11090600	***08***
Set of 2 support feet	11090522	***08***
Flexible sleeve	11090548	***08***
Inlet unit	11090561	***08***
Square plate	11090613	***08***
800		
Non-return damper	11090575	***08***
Counter flange	11090536	***08***
Fan guard	11090588	***08***
Motor guards	11090601	***08***
Set of 2 support feet	11090523	***08***
Flexible sleeve	11090549	***08***
Inlet unit	11090562	***08***
Square plate	11090614	***08***

HELIONE accessories

ACCESSORIES

Description	Reference	Discount family
900		
Non-return damper	11090576	***08***
Counter flange	11090537	***08***
Fan guard	11090589	***08***
Motor guards	11090602	***08***
Set of 2 support feet	11090524	***08***
Flexible sleeve	11090550	***08***
Inlet unit	11090563	***08***
Square plate	11090615	***08***
1000		
Non-return damper	11090577	***08***
Counter flange	11090538	***08***
Fan guard	11090590	***08***
Motor guards	11090603	***08***
Set of 2 support feet	11090525	***08***
Flexible sleeve	11090551	***08***
Inlet unit	11090564	***08***
Square plate	11090616	***08***
1120		
Non-return damper	11090578	***08***
Counter flange	11090539	***08***
Fan guard	11090591	***08***
Motor guards	11090604	***08***
Set of 2 support feet	11090526	***08***
Flexible sleeve	11090552	***08***
Inlet unit	11090565	***08***
Square plate	11090617	***08***
1250		
Non-return damper	11090579	***08***
Counter flange	11090540	***08***
Fan guard	11090592	***08***
Motor guards	11090605	***08***
Set of 2 support feet	11090527	***08***
Flexible sleeve	11090553	***08***
Inlet unit	11090566	***08***
Square plate	11090618	***08***
Set of 4 HELIONE pads Ø315 up to 800		
Set of 4 pads for HELIONE	11090619	***08***
Set of 4 HELIONE pads Ø900 up to 1250		
Set of 4 pads for HELIONE	11090620	***08***

HELIONE Unclassified -F200-F400

Short casing

Long casing

PRODUCT ADVANTAGES

- Range Up to 120,000 m³/h.
- Wide range for car parks, non-residential and industrial premises.
- Numerous accessories to make implementation easier.

COMPLIANCE

- F400°/ F200°- 2-hour.
- CE compliant.

RANGE

Description	Reference	Discount family
Unclassified/F200 (120)/F400 (120)		
HELIONE NC-F200-F400 D315	11090500	***08***
HELIONE NC-F200-F400 D350	11090501	***08***
HELIONE NC-F200-F400 D400	11090502	***08***
HELIONE NC-F200-F400 D450	11090503	***08***
HELIONE NC-F200-F400 D500	11090504	***08***
HELIONE NC-F200-F400 D560	11090505	***08***
HELIONE NC-F200-F400 D630	11090506	***08***
HELIONE NC-F200-F400 D710	11090507	***08***
HELIONE NC-F200-F400 D800	11090508	***08***
HELIONE NC-F200-F400 D900	11090509	***08***
HELIONE NC-F200-F400 D1000	11090510	***08***
HELIONE NC-F200-F400 D1120	11090511	***08***
HELIONE NC-F200-F400 D1250	11090512	***08***

SCOPE

- Ventilation & smoke extraction from covered car parks.
- Quick selection tables define the standard product range. Please consult us for other products.

RECOMMENDATION

- The long casing option is advised when using anti-vibration pads, above Ø 800 and for motors > 4 kW. Otherwise, rails should be used between the stands and pads to spread the weight.

HELIONE electrical data

Short casing

Long casing

PRODUCT ADVANTAGES

- Range Up to 120,000 m³/h.
- Wide range for car parks, non-residential and industrial premises.
- Numerous accessories to make implementation easier.

COMPLIANCE

- F400°/ F200°- 2-hour.
- CE compliant.

UNCLASSIFIED FAN ELECTRICAL CHARACTERISTICS

Note: ID/IN relates to the ratio of the starting current to the rated current.

Motor 1-speed unclassified		
Power (kW)	**Rated current (A) under 400 V**	**ID/In**
0.12	0.38	4.4
0.18	0.52	4.7
0.25	0.69	4.8
0.37	0.99	4.8
0.55	1.23	6.6
0.75	1.62	6.7
1.1	2.35	7.6
1.5	3.17	7.4
2.2	4.56	7.4
3	6.15	7.8
4	8.23	7
5.5	10.4	8.3
7.5	14.2	8.3
9.2	17.4	8.6
11	20.9	7.5
15	27.9	7.2
18.5	35.1	7.4
22	41	7.3
30	57.1	7.5
37	66.8	7.7
45	80.9	7.5
55	98.6	7.5
75	134	7.5
90	158	7
Motor 2-speed unclassified		
0.37/0.09	1.32/0.46	3.3/2.2
0.6/014	1.76/0.76	5.5/3.1
0.8/0.2	1.99/0.88	4.7/2.7
1.2/03	2.92/1.29	5.5/3.1
1.6/0.4	3.8/1.69	5.7/3.2
2.2/0.55	4.84/2	6.9/3.5
2.8/0.7	6.01/2.41	6/3.6
3.8/1	8.26/2.75	7/4.1
5/1.3	10.4/3.5	8.5/6.2
7.2/1.8	16.05/5.06	8.5/6.2
11/3.1	21/7.1	7/4.3
14/3.5	26.5/8.45	7.2/4.2
17/4.3	33.4/12.7	8/4.1
20/5.1	38.6/14.1	8.8/5.1
28/6.5	52/18	7.4/3.6
35/8	67.3/21.8	7.8/4
44/11	80.2/27.2	8/5.1
55/14.7	100/36.5	9/4.6
68/17	127/44	8/4.2
80/20	152/53.2	8.6/4.2

ELECTRICAL CHARACTERISTICS FANS F200/F400

Note: ID/IN relates to the ratio of the starting current to the rated current.

Moteur 1-speed 200°C and 400°C		
Power (kW)	**Rated current (A) under 400 V**	**ID/In**
0.55	1.36	6
0.75	1.85	7.5
1.1	2.44	7.2
1.5	3.3	7.6
2.2	4.64	7.1
3	6.47	7.5
4	7.62	7.5
5.5	10.8	8
7.5	14.2	8
11	21.5	6
15	29	6
18.5	34.7	7.3
22	41.7	7.5
30	54.8	6.5
37	65.4	7.2
45	78.9	7
55	94.4	7.5
75	128	6.7
90	155	7.1
Moteur 2-speed 200°C and 400°C		
0.6/014	1.76/0.76	5.5/3.1
0.8/0.2	1.99/0.88	4.7/2.7
1.2/03	2.92/1.29	5.5/3.1
1.6/0.4	3.8/1.69	5.7/3.2
2.2/0.55	4.84/2	6.9/3.5
2.8/0.7	6.01/2.41	6/3.6
3.8/1	8.26/2.75	7/4.1
5/1.3	10.4/3.5	8.5/6.2
7.2/1.8	16.5/5.06	8.5/6.2
11/3.1	21/7.1	7/4.3
14/3.5	26.5/8.45	7.2/4.2
17/4.3	33.4/12.7	8/4.1
20/5.1	38.6/14.1	8.8/5.1
28/6.5	52/18	7.4/3.6
35/8	67.3/21.8	7.8/4
44/11	80.2/27.2	8/5.1
55/14.7	100/36.5	9/4.6
68/17	127/44	8/4.2
80/20	152/53.2	8.6/4.2

Smoke and heat exhaust - residential car park

PRODUCT ADVANTAGES

- Unit ready for wiring.
- Backed-up programmable timer switch.
- New: Single cabinet for 2 fans (e.g. for 2 storeys).

DESCRIPTION

- Plastic box - IP 55.
- Dimensions: width x height x depth = 375 x 375 x 200 mm.
- Backed-up weekly programming clock.
- Motor protection for high and low speeds using magneto-thermal circuit breakers, with current chosen to match motors used.
- Range for 2-speed Dahlander motor, 3-phase 400V.
- Input/output terminals for manual smoke and heat exhaust triggering devices when power is cut off (dry contact open).
- Possibility of connecting a key-operated fire brigade shutdown switch (dry contact open).
- Manuals and drawings available from your branch.

SCOPE

- You can use the built-in timer on this unit to programme the fan (low speed/high speed/stop) according to planned vehicle traffic in the car park. This unit is especially suitable for car parks in collective housing buildings.
- It handles triggering the manual smoke and heat exhaust and shutting down the smoke and heat exhaust at the request of the fire brigade.

SMOKE AND HEAT EXHAUST CABINET - RESIDENTIAL CAR PARK

Description	Reference	Discount family
CAR PARK BOX 4/ 1.6A - DAH	11057252	*07*
CAR PARK BOX 6/ 1.6A - DAH	11057255	*07*
CAR PARK BOX 9/ 2.4 A - DAH	11057253	*07*
CAR PARK BOX 12/ 4 A - DAH	11057256	*07*
CAR PARK BOX 16/ 6 A - DAH	11057254	*07*
CAR PARK BOX 24/ 6 A - DAH	11057257	*07*
CAR PARK BOX 31/ 10 A - DAH	11057258	*07*
CAR PARK BOX 40/ 12 A - DAH	11057259	*07*
CAR PARK BOX 57/ 16 A - DAH	11057260	*07*
New: Single cabinet for 2 fans (e.g. for 2 storeys)		
CAR PARK BOX - 2 FANS	11057261	*07*

ACCESSORIES

Description	Reference	Discount family
Manual triggering device	11044121	*17*
Fire brigade shutdown NO + NC	11057251	*08*

WIRING PRINCIPLES

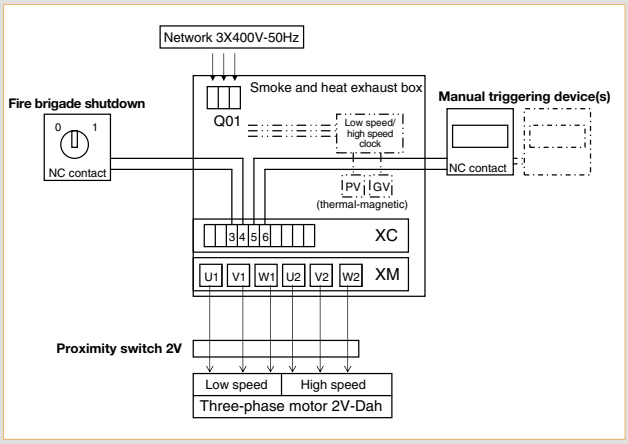

Presentation of AXONE Micro II unit range

AXONE T0 box
1-speed model (4.7 A and 16.7 A)

AXONE T1 and T2 box
1- and 2-speed model Smoke and heat exhaust
25.4 A, 43.3 A and 63.3 A)

PRODUCT ADVANTAGES

- Version with built-in switch and pressure switch: ideal for boxes installed at less than 2 m from fan.
- Easy wiring.
- Diagnostic help screen.

COMPLIANCE

- NF-certified.

DESCRIPTION

- Hinged cover.
- Smoke and heat exhaust activation push button on front panel.
- Possible to have built-in pressure switch and proximity switch on 4.7 A and 16.7 A models.
- IP54-certified by and independent body.
- Insulation test on line downstream of box, factory setting at 500 k.
- Test of upstream phases: check the presence and non-inversion of phases.
- Remembers the state of the box in the event of power cut. When power is re-established, the box resumes the initial state.

AXONE size 0 box

- 1-speed model 4.7 A and 16.7 A
- Proximity switch on front panel.

New AXONE size 1 and 2 box

- 1-speed model 25.4 A, 43.3 A and 63.3 A
- 1-speed, gradual start model 16.7 A, 25.4 A and 43.3 A
- 2-speed model 16.7 A, 25.4 A, 43.3 A and 63.3 A
- Clear display of state and any fault with the box on front panel.
- Proximity switch on the side of the box fan.

SCOPE

- All Relay boxes for AXONE Micro II smoke and heat exhaust fans are NF-certified. They satisfy regulatory requirements concerning buildings receiving people.
- The AXONE Micro II Relay box is the mandatory interface between the LV main switchboard and the smoke and heat exhaust fan (exhaust or supply).
- It manages the fan operation and any defects that could impair the Relay of the fan (smoke and heat exhaust).
- An NF-certified Relay box can only control one smoke and heat exhaust fan.

IMPLEMENTATION

Standard NF-S-61932 sets out the installation rules:

- A Relay box for a smoke and heat exhaust fan must be installed outside the Relay area(s) served by the fan it controls.
  In general, the Relay box is installed either close to the LV main switchboard or to the fan. In the latter case, AXONE Micro II equipped with the switch and pressure switch is perfectly suitable and compliant.
- The fire brigade shutdown box must be a held 2-position 0-1 switch with level 2 access control (e.g. key). It must be positioned close to the fire Relay control system.
- The reset box must have an non-held 2-position 0-1, left to right recall, with an access level other than 0 (e.g. key). It must be located in the Relay area(s) associated corresponding to the controlled Relay box.

PRESENTATION OF THE NEW SIZE 1 AND 2 BOX

Front panel display T1/T2 box

Presentation of AXONE Micro II unit range

AXONE T0 box
1-speed model (4.7 A and 16.7 A)

AXONE T1 and T2 box
1- and 2-speed model Smoke and heat exhaust
25.4 A, 43.3 A and 63.3 A)

OPERATING PRINCIPLE

- The AXONE Micro II Relay box is the interface between the LV main switchboard and the smoke and heat exhaust fan. It is the 'cut-off' switch for the power supply to the smoke and heat exhaust fan.
- The Relay box manages the fan operation and any defects that could impair the Relay of the fan (smoke and heat exhaust). It communicates permanently with the fire Relay control system.
- On command from the fire Relay control system, AXONE Micro II activates the fan in smoke and heat exhaust mode by closing the appropriate contact.
- On command from the fire brigade shutdown control, AXONE Micro II shuts down the fan and moves into fault mode (caution, the fan is stopped but not in stand-by mode).
- On command from the reset control (box or CMSI), AXONE Micro II stops the fan and moves into stand-by mode.

KEY

(1) AXONE Micro II
(2) Push button: manual running of the fan.
(3) Fire Relay control system: commands activation of smoke and heat exhaust mode.
(4) Signalling unit: verifies the status of the Relay box (red lamp = Relay position, yellow lamp = standby position).
(5) Fire brigade shutdown control: priority shutdown of fan.
(6) Reset control: shuts down the fan to achieve stand-by mode. Controlled by 0-1 non-held key-operated box.
(7) Pressure switch: indicates 1 of 4 states of the fan airflow (On/Off).
(8) Proximity switch: prevents fan start-up during servicing. Indicates 1 of 4 positions (open/closed).
(9) Insulation tester: verifies state of electrical insulation of downstream circuits, from 1 to 10. In the event of signal fault, 1 to 4.
(10) Exhaust or supply fan used for smoke and heat exhaust.

EXAMPLE OF A 1-SPEED SMOKE AND HEAT EXHAUST SYSTEM

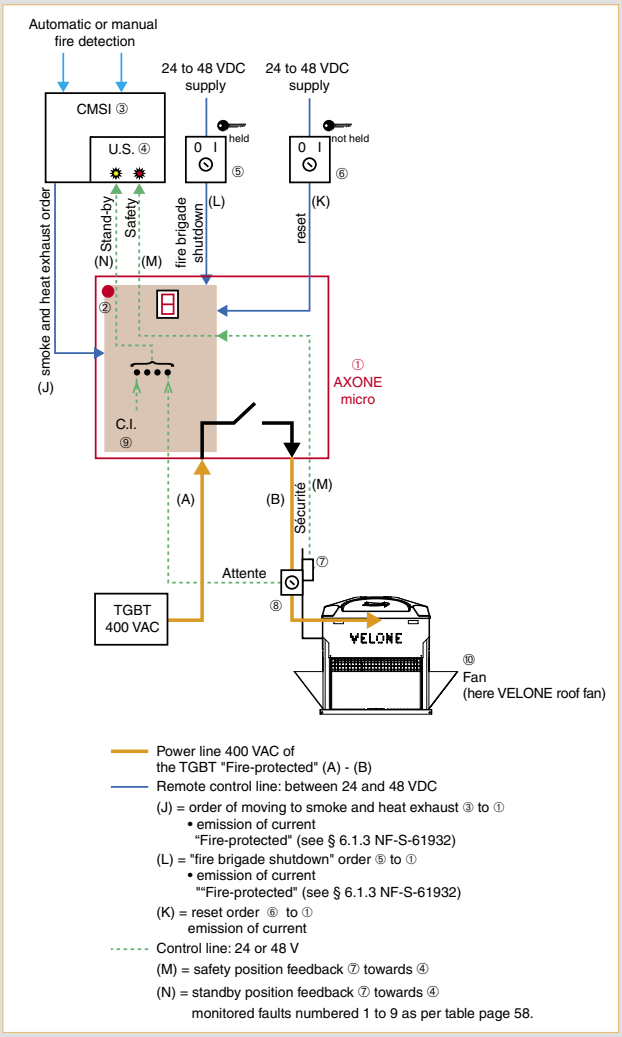

MAINTENANCE

- Standard NF-S-61933 stipulates quarterly inspections of Relay boxes.

Selection of AXONE Micro II Relay box

Model T0 1-speed, 4.7 A and 16.7 A

Model T1/T2: 1-speed, 25.4, 43.3/63.3 A and 2-speed

COMPLIANCE

- NF-certified.

DESCRIPTION

Choose the appropriate model for your use

- **1: Follow the diagram** opposite to define the box model suitable for your use.
- **2: Choice of current**
  In accordance with NF certification, the rated current indicated on the AXONE Micro II box already includes a Relay coefficient of 1.5. The rated current of the box therefore corresponds to that of the smoke and heat exhaust fan.
- **3: Choice of remote control mode**
  With AXONE Micro II, it is pointless to choose between 24 or 48 VDC emission. Via the electronic board, AXONE Micro II operates with all four of these remote control modes.
  Note: Current break mode activated manually using a switch has been prohibited since 2013.
- **4: Select the equipment**
  - In accordance with the NF standard, all our boxes feature the insulation test function as standard.
  - For 4.7 A and 16.7 A current boxes only: there is an "IP+DP" which includes the proximity switch and the pressure switch in the box, which is ideal for an installation near the fan (less than 2 m away).
- For 1-speed and 2-speed smoke and heat exhaust uses, there is a "Gradual start-up" range that offers extensive savings on the AES power and therefore savings on installation costs.

Further information

SEE «Compulsor Fire Protection».

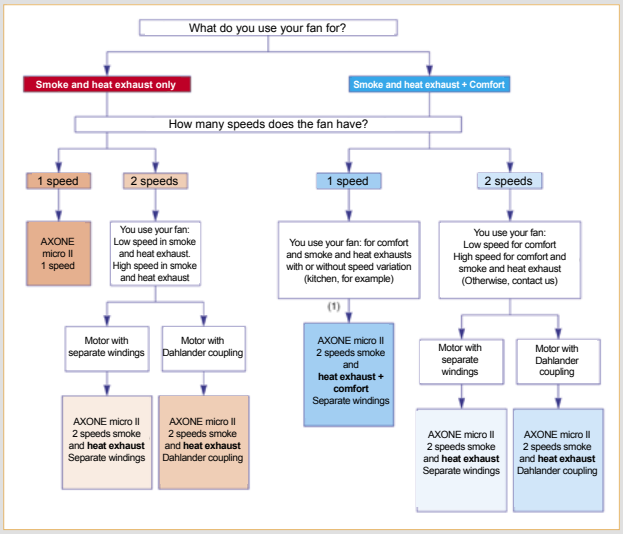

AXONE Micro 1-speed/DES: Single-speed smoke and heat exhaust

Closed, with switch and pressure switch (4.7 A and 16.7 A) Size 0

New box for current 25.4 A, 43.3 A and 63.3 A Size 1

Fire brigade shutdown box

PRODUCT ADVANTAGES

- Version with built-in switch and pressure switch: ideal for boxes installed less than 2 m from the fan
- Easy wiring.
- Diagnostic help screen.

COMPLIANCE

- NF-certified.

RANGE

Description	Reference	Discount family
230 V power supply box		
AXONE-1-speed/DES 16.7 A 1-phase 230V	11090660	*08*
AXONE-1-speed/DES 16.7 A 3-phase 230V	11090658	*08*
400 V power supply box		
AXONE-1-speed/DES-3-phase 4.7 A	11090648	*08*
AXONE-1-speed/DES-3-phase 4.7+IPDP	11090649	*08*
AXONE-1-speed/DES-3-phase 16.7 A	11090652	*08*
AXONE-1-speed/DES-3-phase 16.7 A+IP	11090650	*08*
AXONE-1-speed/DES-3-phase 16.7+IPDP	11090657	*08*
AXONE-1-speed/DES-3-phase 25.4 A	11090653	*08*
AXONE-1-speed/DES-3-phase 43.3 A	11090654	*08*
AXONE-1-speed/DES-3-phase 63.3 A	11090655	*08*

- Usage= single-speed smoke and heat exhaust.

DESCRIPTION

- Side-hinged cover.
- Smoke and heat exhaust activation push button on front panel.

Box model 4.7 A and 16.7 A:

- Two mini push buttons on electronic board to perform a full cycle:
  - simulation of fire brigade shutdown order,
  - simulation of a reset order.
- Green status indicator on front panel.
- Electronic board display showing state and possible faults on unit.
- Two versions:
  - basic unit,
  - box with built-in proximity switch and pressure switch (IPDP) on 4.7 and 16.7 A 400 V 3-phase.

New box model 25.4 A, 43.3 A and 63.3 A:

- Clear display of state and any fault with the box on front panel.
- Two mini push buttons inside the box to perform a full cycle:
  - simulation of fire brigade shutdown order,
  - simulation of a reset order.

SCOPE

- Only for smoke and heat exhaust.
- For 1-speed 3-phase 400V or 230V motor and single-phase 230V motor.

ELECTRICAL ACCESSORIES

Description	Reference	Discount family
AXONE reset box	11057600	*08*
AXONE fire brigade shutdown box	11057601	*08*
40-300 Pa pressure switch kit	11091001	*07*
100-1000 Pa pressure switch kit	11091002	*07*
1-speed - 7.5 kW proximity switch + contacts	11057606	*07*
1-speed - 22.5 KW proximity switch + contacts	11057607	*07*
1-speed - 30 KW proximity switch + contacts	11057608	*07*

INSTALLATION ACCESSORIES

Description	Reference	Discount family
Flat roof base AXONE = 190 mm T0	11021267	*08*
Flat roof base AXONE = 380 mm T1	11021265	*08*
Wall mounting brackets	11021264	*08*

DIMENSIONS - ELECTRICAL CHARACTERISTICS

Description	Rated current (A)	W (mm)	H (mm)	D (mm)	Size
AXONE Micro 1-speed/DES -4.7 A	4.7	190	280	130	T0
AXONE Micro 1-speed/DES -16.7 A	16.7	190	280	130	T0
AXONE Micro 1-speed/DES -25.4 A	25.4	300	400	150	T1
AXONE Micro 1-speed/DES -43.3 A	43.3	300	400	150	T1
AXONE Micro 1-speed/DES -63.3 A	63.3	300	400	150	T1

INSTALLATION

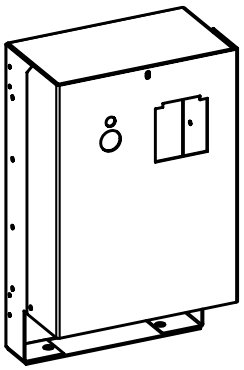

- Fixed to wall or floor, preferably with flat roof base.
- For installation outdoors, protect the box from UV rays using the flat roof base.

Flat roof base

- The AXONE Micro II flat roof base is fitted with a protective, UV-resistant rain hood made of galvanised steel. It is used to fix the Relay box to the ground for a clean installation.
- If the bracket is fixed to a wall, it requires wall mounting brackets.

AXONE Micro II Relay boxes

AXONE Micro 1-speed/DES - D.PROG : Single-speed smoke and heat exhaust, gradual start-up

AXONE T1 and T2 box
1- and 2-speed model Smoke and heat exhaust
25.4 A, 43.3 A and 63.3 A)

Fire brigade shutdown box

PRODUCT ADVANTAGES

- Higher power than AES.
- Id/In < 3.
- Cost-saving installation

COMPLIANCE

- NF-certified.

RANGE

Description	Reference	Discount family
Gradual start-up boxes - 400V		
AXONE-1-speed/DES-3-phase 400V-D.PROG 16.7 A	11090640	***08***
AXONE-1-speed/DES-3-phase 400V-D.PROG 25.4 A	11090641	***08***
AXONE-1-speed/DES-3-phase 400V-D.PROG 43.3 A	11090642	***08***
AXONE-1-speed/DES-3-phase 400V-D.PROG 60 A	11090643	***08***

DESCRIPTION

New box:

- Clear display of state and any fault with the box on front panel.
- Hinged cover.
- Smoke and heat exhaust activation push button on front panel.
- Two mini push buttons inside the box to perform a full cycle:
  - simulation of fire brigade shutdown order,
  - simulation of a reset order.
- Equipped with a gradual starter. Gradual start-up is automatic.

SCOPE

- Only for smoke and heat exhaust.
- For single-speed 3-phase 400V motor with AES power limitation search.

ELECTRICAL ACCESSORIES

Description	Reference	Discount family
AXONE reset box	11057600	***08***
AXONE fire brigade shutdown box	11057601	***08***
40-300 Pa pressure switch kit	11091001	***07***
100-1000 Pa pressure switch kit	11091002	***07***
1-speed - 7.5 KW proximity switch + contacts	11057606	***07***
1-speed - 22.5 KW proximity switch + contacts	11057607	***07***
1-speed - 30 KW proximity switch + contacts	11057608	***07***

INSTALLATION ACCESSORIES

Description	Reference	Discount family
Flat roof base AXONE = 380 mm T1	11021265	***08***
Flat roof base AXONE = 560 mm T2	11021266	***08***
Wall mounting brackets	11021264	***08***

DIMENSIONS - ELECTRICAL CHARACTERISTICS

Description	Rated current (A)	W (mm)	H (mm)	D (mm)	Size
AXONE-1-speed/DES-TRI 400 V-D.PROG 16.7 A	16.7	400	500	210	T2
AXONE-1-speed/DES-TRI 400 V-D.PROG 25.4 A	25.4	400	500	210	T2
AXONE-1-speed/DES-TRI 400 V-D.PROG 43.3 A	43.3	400	500	210	T2

INSTALLATION

- Adjust the starter to the motor rated current in relation to the maximum current for the starter.
- Fixed to wall or floor, preferably with flat roof base.
- For installation outdoors, protect the box from UV rays using the flat roof base.

Flat roof base.

- The AXONE Micro II flat roof base is fitted with a protective, UV-resistant rain hood made of galvanised steel. It is used to fix the Relay box to the ground for a clean installation.
- If the bracket is fixed to a wall, it requires wall mounting brackets.

AXONE Micro 2-speed/DES: Two-speed smoke and heat exhaust

Closed, with switch and 2 pressure switches

Open, with switch and 2 pressure switches

Fire brigade shutdown box

COMPLIANCE

- NF-certified.

RANGE

Description	Reference	Discount family
AXONE-2-speed/DES-BI 16.7 A	11090672	08
AXONE-2-speed/DES-BI 16.7 A+IP	11090678	08
AXONE-2-speed/DES-BI 16.7+IPDP	11090677	08
AXONE-2-speed/DES-BI 25.4 A	11090673	08
AXONE-2-speed/DES-BI 43.3 A	11090674	08
AXONE-2-speed/DES-BI 63.3 A	11090675	08
AXONE-2-speed/DES-DAH 16.7 A	11090662	08
AXONE-2-speed/DES-DAH 16.7 A+IP	11090668	08
AXONE-2V/DES-DAH 16,7+IPDP	11090667	08
AXONE-2V/DES-DAH 16,7+IPDP 20-300/100-1000	11090666	08
AXONE-2V/DES-BI 16.7+IPDP 20-300/100-1000	11090676	08
AXONE-2-speed/DES-DAH 25.4 A	11090663	08
AXONE-2-speed/DES-DAH 43.3 A	11090664	08
AXONE-2-speed/DES-DAH 63.3 A	11090665	08

- High speed and low speed in smoke and heat exhaust mode.

DESCRIPTION

New box:

- Clear display of state and any fault with the box on front panel.
- Hinged cover.
- Two smoke and heat exhaust push button controls (low and high speed) on front panel.
- Two mini push buttons inside the box to perform a full cycle:
  - simulation of fire brigade shutdown order,
  - simulation of a reset order.
- Two versions:
  - basic unit,
  - box with built-in proximity switch and two pressure switches (IPDP) on 16.7 A.

SCOPE

- 2-speed smoke and heat exhaust only.
- For 3-phase 400 V 2-speed motors with separate windings (BI) and Dahlander (DAH) coupling.

ELECTRICAL ACCESSORIES

Description	Reference	Discount family
AXONE reset box	11057600	08
AXONE fire brigade shutdown box	11057601	08
40-300 Pa pressure switch kit	11091001	07
100-1000 Pa pressure switch kit	11091002	07
Switch 2V-7.5kW + Contacts	11057613	07
Switch 2V-22.5kW + Contacts	11057610	07
Switch 2V-30 kW + Contacts	11057611	07

INSTALLATION ACCESSORIES

Description	Reference	Discount family
Flat roof base AXONE = 380 mm T1	11021265	08
Flat roof base AXONE = 560 mm T2	11021266	08
Wall mounting brackets	11021264	08

DIMENSIONS - ELECTRICAL CHARACTERISTICS

Description	Rated current (A)	W (mm)	H (mm)	D (mm)	Size
AXONE Micro 2-speed/DES-BI-16.7 A	16.7	300	400	150	T1
AXONE Micro 2-speed/DES-BI-25.4 A	25.4	400	500	210	T2
AXONE Micro 2-speed/DES-BI-43.3 A	43.3	400	500	210	T2
AXONE Micro 2-speed/DES-BI-63.3 A	63.3	400	500	210	T2
AXONE Micro 2-speed/DES - Dahl -16.7 A	16.7	300	400	150	T1
AXONE Micro 2-speed/DES - Dahl -25.4 A	25.4	400	500	210	T2
AXONE Micro 2-speed/DES - Dahl -43.3 A	43.3	400	500	210	T2
AXONE Micro 2-speed/DES - Dahl -63.3 A	63.3	400	500	210	T2

INSTALLATION

- Adjust the starter to the motor rated current in relation to the maximum current for the starter.
- Fixed to wall or floor, preferably with flat roof base.
- For installation outdoors, protect the box from UV rays using the flat roof base.

Flat roof base.

- The AXONE Micro II flat roof base is fitted with a protective, UV-resistant rain hood made of galvanised steel. It is used to fix the Relay box to the ground for a clean installation.
- If the bracket is fixed to a wall, it requires wall mounting brackets.

AXONE Micro 2-speed/COMF: 2 speeds - "comfort + smoke and heat exhaust"

Closed with switch and one pressure switch
1 pressure switch

Fire brigade shutdown box

PRODUCT ADVANTAGES

- Version with built-in switch and pressure switch: ideal for boxes installed at less than 2 m from fan.
- Easy wiring.
- Help with diagnostics.

COMPLIANCE

- NF-certified.

RANGE

Description	Reference	Discount family
AXONE-2-speed/Comf-BI 16.7 A	11090705	08
AXONE-2-speed/Comf-BI16.7+IPDP	11090709	08
AXONE-2-speed/Comf-BI 25.4 A	11090706	08
AXONE-2-speed/Comf-BI 43.3 A	11090707	08
AXONE-2-speed/Comf-BI 63.3 A	11090708	08
AXONE-2-speed/Comf-DAH 16.7 A	11090700	08
AXONE-2-speed/Comf-DAH16.7+IPDP	11090704	08
AXONE-2-speed/Comf-DAH 25.4 A	11090701	08
AXONE-2-speed/Comf-DAH 43.3 A	11090702	08
AXONE-2-speed/Comf-DAH 63.3 A	11090703	08

- High speed and low speed in comfort mode, high speed in smoke and heat exhaust mode.

DESCRIPTION

- Same description as on previous page except for:
  - Smoke and heat exhaust activation push button on front panel.
- Two versions:
  - basic unit,
  - box with built-in proximity switch and pressure switch (IPDP) on 16.7 A.
- Built-in non-return contacts.
- Pressure switch slaved to contacts.

SCOPE

- High-speed smoke and heat exhaust, low-speed and high-speed comfort settings.
- For 3-phase 400 V 2-speed motors with separate windings (BI) and Dahlander (DAH) coupling.
- Note: use a BI Relay box for a single-speed fan operating in both comfort and smoke and heat exhaust modes.

ELECTRICAL ACCESSORIES

Description	Reference	Discount family
AXONE reset box	11057600	08
AXONE fire brigade shutdown box	11057601	08
40-300 Pa pressure switch kit	11091001	07
100-1000 Pa pressure switch kit	11091002	07
Switch 2V-7.5kW + Contacts	11057613	07
Switch 2V-22.5kW + Contacts	11057610	07
Switch 2V-30 kW + Contacts	11057611	07

INSTALLATION ACCESSORIES

Description	Reference	Discount family
Flat roof base AXONE = 380 mm T1	11021265	08
Flat roof base AXONE = 560 mm T2	11021266	08
Wall mounting brackets	11021264	08

DIMENSIONS - ELECTRICAL CHARACTERISTICS

Description	Rated current (A)	W (mm)	H (mm)	D (mm)	Size
AXONE Micro 2-speed/COMF-BI-16.7 A	16.7	300	400	150	T1
AXONE Micro 2-speed/COMF-BI-25.4 A	25.4	400	500	210	T2
AXONE Micro 2-speed/COMF-BI-43.3 A	43.3	400	500	210	T2
AXONE Micro 2-speed/COMF-BI-63.3 A	63.3	400	500	210	T2
AXONE Micro 2-speed/COMF - Dahl -16.7 A	16.7	400	500	210	T2
AXONE Micro 2-speed/COMF - Dahl -25.4 A	25.4	400	500	210	T2
AXONE Micro 2-speed/COMF - Dahl -43.3 A	43.3	400	500	210	T2
AXONE Micro 2-speed/COMF - Dahl -63.3 A	63.3	600	800	210	T0 + T2

IMPLEMENTATION

- Adjust the starter to the motor rated current in relation to the maximum current for the starter.
- Fixed to wall or floor, preferably with flat roof base.
- For installation outdoors, protect the box from UV rays using the flat roof base.

Flat roof base.

- The AXONE Micro II flat roof base is fitted with a protective, UV-resistant rain hood made of galvanised steel. It is used to fix the Relay box to the ground for a clean installation.
- If the support is fixed to a wall, it requires wall mounting brackets.

SMOKE EXHAUST DAMPERS AND AIR INLETS RANGE

Aldes smoke exhaust dampers are important components of a fire protection system. Indeed, they open on demand to let smoke escape and let fresh air into the damaged area.

They therefore need to be:
- correctly dimensioned,
- clearly identified and labelled as safety devices,
- be free of any obstacles.

Guard grills prevent external aggressions from harming the smoke exhaust dampers (kicks, beds/trolleys in hospitals) and prevent people and objects from falling into the smoke exhaust ducts.

TYPE	MODEL	L x H dimensions (mm)		FREE SURFACE (dm²)		FIRE PROTECTION RATING
		MIN	MAX	MIN	MAX	
Gate smoke exhaust dampers	OPTONE "+ grille" OPTONE Classic OPTONE H page 28	300 x 300	1000 x 1200	4.5	104	EI 60 S to EI 120 S
Tunnel smoke exhaust dampers	PLAFONE page 28	200 x 200	1000 x 1000 1500 x 500	1.5	82	EI 90 S / EI 120 S
Transfer smoke exhaust dampers	GDF page 29	250 x 250	800 x 800	5.6	63	E30 / E60
Air inlets	AIRONE page 29	475	1350	12.8	144	
	OXYTONE LAMES page 29	330	1350	6.5	129	
	OXYTONE PANNEAU page 29	420	1600	9	160	

The **Aldes** range of smoke exhaust dampers is fully motorised (1-speed/2-speed gate, tunnel) to facilitate maintenance operations and ensure system reliability at any time.

Aldes guard grills fit seamlessly into the environment as they are flush-mounted and come in a wide range of colours. They are certified compliant on the damper classification reports. So there are no surprises during acceptance on site.

CONFORMITY	N° CE / RC / TEST	MOTORISED	ASSEMBLY WITH MOUNTING FRAME	PROTECTIVE SCREEN
CE (EN12101-8) NFS 61937-10 NF264	1812-CPR-1053 1812-CPR-1055 SB13 00 21 N°02/10.02 and 02/11.02 of 01/01/2014	●	●	built-in screen GFA007, GFA steel, GFE, GGH
CE (EN12101-8) NFS 61937-10 NF264	1812-CPR-1054 N°02/09.02 of 01/01/2014	●		GFE slim
EN 1634-1/ EN 13501-2 NF264	EFR 15-002901 N° 02/08.05 of 01/01/2014		● (E30)	GFE, GGH, GFA steel
NFS 61937-8	EFR 14-J-003164		●	GFAP, GFAP 007, GFE
NFS 61937-8	SB 13 00 76	●	●	
CE (EN 12101-2) NFS 61937-7	0336-CPD-33882 N°14/01.02			

The regulatory environment for smoke exhaust dampers is changing

The European Union has issued the Construction Products Regulation (305/2011).
Today, it is the turn of smoke exhaust dampers to be subject to CE marking. This new regulation will disrupt the habits of stakeholders in the fire protection industry. In particular these changes concern:

- New methods for testing fire resistance and for classifying equipment,
- New European vocabulary for fire resistances,
- New CE certificate, in addition to existing documents (fire resistance classification reports, official report NF-S-61937-10 and NF certificate).
- Performance declarations compliant with regulation 305-2011.

BUT IN TECHNICAL TERMS, WHAT CHANGES AFFECT SMOKE EXHAUST DAMPERS?

The smoke exhaust damper has had to evolve to satisfy new European regulations, an illustration of the best-selling gate type damper in France:

VANTONE damper before CE marking

OPTONE damper after CE marking

Changes in regulations are extensive and impose the full re-qualification of all the ranges:

- test conducted on a European duct compliant with EN1366-8 and/or -9,
- test performed under negative pressure, a damper is placed in the oven to test its ability to remain open when hot, another is above the oven, closed, to demonstrate its ability to act as a fire barrier.
- leakage rate minimised to 200 m3/h/m2 under the test pressure, either 1000 or 1500 Pa.

CF 1h30 ➡ E I 90 S (Ved - i ⟷ o) – 1000 Pa - AA - multi - C300

EXPLANATION OF THE NEW EUROPEAN FIRE PROTECTION CLASSIFICATIONS

- **E** = Integrity against fire (corresponds to former Fire Retardant),
- **I** = Insulation (EI corresponds to our former Fire Damper),
- **90** = duration in minutes, or 120 minutes,
- **S** = the leakage rate is stricter at 200 m3/h maximum per m², under test pressure, generally 1000 or 1500 Pa. The S criteria is obligatory in France,
- **i ⟷ o** = the damper is tested for internal and external fires, it satisfies restrictions for use as a low position air inlet and high-position smoke exhaust damper,
- **Ved** = the damper is tested on a vertical duct,
- **1000 Pa**: negative pressure applied to the damper during the fire resistance test: the damper is remote-controlled,
- **multi** as in multi-compartment: the duct is a collective one. Note that the «multi» version is also qualified for use as a «single» duct,
- **C300** = damper reserved for use in a smoke exhaust system. Succeeded a 300-cycle endurance test prior to testing.

AND WHAT WILL BECOME OF STANDARD NF S 61937-10?

Some time ago, the commission responsible for fire safety standards NF-S-61930 to 40 undertook to revise standard NF-S-61937 in preparation for the arrival of CE marking on each Actuated Safety Device (DAS).
In France, all smoke exhaust dampers must also hold an official report in compliance with NF-S-61937-10 (association of dampers in a fire safety system) to guarantee their suitability for use in the fire safety system. The NF certificate issued by AFNOR CERTIFICATION is also third party proof.

HOW TO SELECT A CE MARKED SMOKE EXHAUST DAMPER CE ?

1 - Ensure the presence of the certificate of CE compliance as per EN 12101-8.
2 - Ensure that the damper service pressure does not exceed the test pressure - indicated on the certificate - (in accordance with the decision of 14 March 2011, article 16-d-4 «Only dampers with EIS classification may be used. The service pressure must not exceed the test pressure.»).
3 - Ensure that the fire resistance classification for the smoke exhaust damper (EI 90 S or EI 120 S) corresponds to the intended use. Particular attention should be paid to installation. For example, a CE smoke exhaust damper is always connected to a smoke exhaust duct compliant with EN 1366-8 and/or -9 in dimensional terms.

The regulatory environment for smoke exhaust dampers is changing

TABLE OF EQUIVALENCES FOR SMOKE EXHAUST DAMPERS «BEFORE / AFTER CE»

To help you select your new CE-compliant smoke exhaust damper, we have created this table to indicate correspondences between old and new ranges

French dampers	CE dampers	European vocabulary
VANTONE PF and CF	OPTONE "+ Grille" OPTONE single-flap OPTONE double-flap	OPTONE "+ Grille" EI 90 S - 1000 Pa
VANTONE M	New OPTONE gate type damper: • OPTONE "+Grille" model offering major time savings on installation and operation. • OPTONE "Classic" model, housing a specific aesthetic grill, type GFE, GGH or GFA 007 in the colour of your choice.	OPTONE "Classic" EI 90 S - 1000 Pa EI 120 S - 1000 Pa
VRFI-DES	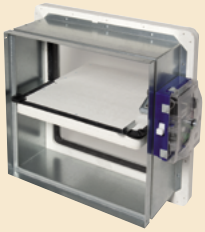 New PLAFONE tunnel damper.	PLAFONE EI 120 S - 1500 Pa
GCF	Guillotine smoke exhaust dampers are no longer produced, use an OPTONE double-flap damper to limit travel in the duct.	OPTONE "+ Grille" EI 90 S - 1000 Pa OPTONE "Classic" EI 90 S - 1000 Pa EI 120 S - 1000 Pa
GDF	The GDF transfer damper is not a smoke exhaust damper as defined by the standard EN 12101-8, so it has not been modified. It's been tested according to EN1634-1.	E60 / E30

Presentation of OPTONE smoke exhaust damper range

OPTONE «Classic» 1-flap, mounting frame, steel trim, GFA007 grille

OPTONE «+ Grille» 2-flas, mounting frame, reset motor and steel trim

INTRODUCTION

• Inspired by its cousin OPTONE.H available on the market since early , the OPTONE gate damper replaces all VANTONE dampers.
• The range of OPTONE dampers presents a exclusive design: OPTONE «+Grille».
• This patented innovation meets most installation requirements and saves time by avoiding the installation of the separate grille.
• To satisfy certain aesthetic needs, there is also the OPTONE «Classic» range, to which GFA 007, GFE or GGH type grilles may be attached.

DESCRIPTION

• The OPTONE smoke exhaust damper comprises:
- an aluminium frame built with sections that are crimped together on the inside to offer first rate exterior aesthetics,
- a leaf made of refractory metal,
- an electric control mechanism in a protective box.
• The damper is supplied with essential accessories:
- 20/10 mm thick steel mounting-frame, dimensions 12 x 70 mm,
- choice of aesthetic aluminium grill:
• on the OPTONE "+Grille", model, the grille frame is moulded into the damper, the finned-core is attached with invisible Zamak clips (same principle as on OPTONE.H),
• GFA 007 grill to fix on front face of OPTONE "Classic" damper,
• GFE or GGH grill to place in front of the OPTONE "Classic" damper,
• The nominal W x H dimensions of the damper correspond to the dimensions of the reservation required to embed the mounting-frame, which is fixed without adhesive mortar.
• Free air passage (dm2) on the damper depends on the W and H (mm) dimensions and the number of leaves:
Single leaf = ((L-57) x (H-57) -14147) / 10000
Double leaf = ((L-76) x (H-57) -14147) / 10000
• The locking system is positioned on the leaf, in order to enable as much air passage as possible and to reduce pressure losses.
• An airtight seal when cold is provided by 2 elastomer gaskets clipped into the frame grooves:
- the first seals the frame and the leaf,
- the second seals the frame and the duct.
• An airtight seal when hot is provided by 2 intumescent seals fixed around the outside of the damper facing the vane field and the duct sleeve.
• Electric wiring can be passed through a corner near the control box.
• The locking system features a trip attached to the leaf which slots into a bolt lock embedded in the frame. The electromagnetic trip device is self-resetting,enabling you to close the leaf with just one hand. It is patented.
• The connection box is scalable and is designed to facilitate electrical connections:
- screwless terminals for the remote control and motorised reset,
- detachable signalling contacts,
- large space to house electronic modules for fire safety systems,
- pre-equipped with electrical connections to enable fitting of reset motor at a late time.

PRINCIPLES DRAWING

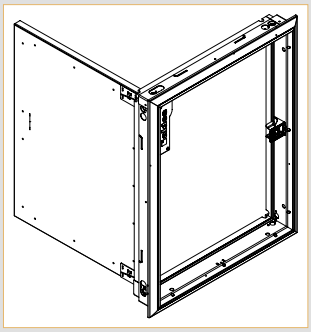

OPTONE "+ Grille" 1-flap – open with vane core removed

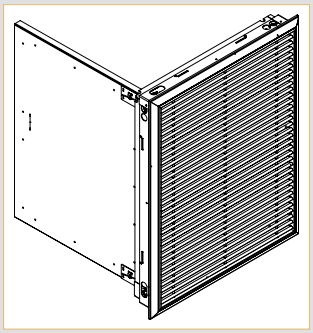

OPTONE "+ Grille" 1-flap – open with present vane core

IMPLANTATION DRAWING

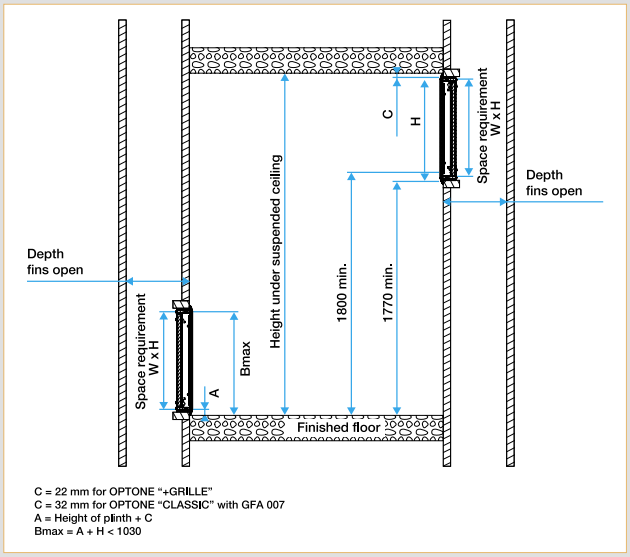

Fire Protection

Presentation of OPTONE smoke exhaust damper range

OPTONE «Classic» 1-flap, mounting frame, steel trim, GFA007 grille RAL 9010.

OPTONE «+ Grille» 2-flaps, reset mtor, without grille

ADVANTAGES

- *Time savings on installation of OPTONE "+Grille" model.*
- *Easy wiring.*
- *Motors possible on whole range.*
- *OPTONE «Classic» custom-made.*
- *Simplicity: Nominal dimensions = dimensions of opening in wall.*
- *Reversible mounting-frame top/bottom.*
- *Same mounting-frame for all OPTONE models.*
- *Built-in cable passages.*

COMPLIANCE(S)

- *NF-S-61937-10.*
- *CE marking as per EN 12101-8.*
- *EI 90 (ved-i o) S 1000 Pa - AA multi.*
- *EI 120 (ved-i o) S 1000 Pa - AA multi.*
- *H > 1000 = EI 60 S.*

FIELD OF APPLICATION

- Mechanical or natural smoke exhaust systems (Public buildings, high-rise buildings, Residential).
- New and existing buildings (custom-made OPTONE classic).
- OPTONE can be used for air intake and smoke exhaust.
- Principle: OPTONE opens by command from the fire safety control system to create an air swirl that will evacuate smoke.

QUALIFICATION

- CE-marking compliant as per EN 12101-8.
- Fire resistance classification according to EN 1366-10:

1. OPTONE «+Grille».
EI 90 (ved-i o) S - 1000 Pa - AA multi, compliant with § 2.4 of EN 13501-4,
2.a OPTONE «Classic»:
EI 120 (ved-i o) S - 1000 Pa - AA multi, compliant with § 2.4 of EN 13501-4
2.b OPTONE «Classic» for H > 1000 mm: EI 60 (ved-i o) S - 1000 Pa - AA multi, compliant with § 2.4 of EN 13501-4,

- List of ducts tested available by request.
- Compliant with NF-S-61937-10.
- Leakage rate: the OPTONE damper presents an extremely low leakage rate: at 1000 Pa, the leak is per m² of vane, or less than 40 m³/h at 1000 Pa, with a damper measuring 400 x 650 mm.
- Pressure losses below those of VANTONE dampers with equivalent dimensions.

Our smoke exhaust damper are qualified until EI 120S fire resistance on these following ducts (and on EN 1366-9-compliant ducts made of the same material and with the same density):

- PROMATECT L500
- TECNIVER L
- GEOFLAM/ GEOFLAM Light
- EXTHAMAT P
- GLASROC F V500
- CAROPLATRE + GLASROC
- Desenfire
- STAFF PUR

OPTONE 1-FLAP

OPTONE «+Grille» : code 11044410 / OPTONE «Classic» : code 11044420

OPTONE 2-FLAPS

OPTONE « + Grille » 2-flaps : code 11044411 / OPTONE « Classic » 2-flaps : code 11044421 / OPTONE « Classic » 2H.2-flaps : code 11044431

- W = Width of opening for mounting frame fixed without mortar.
- H = Height of opening for mounting frame fixed without mortar.
- Where H > 1000: the damper is only available in «Classic» version and is qualified EI 60 (ved-i o) S 1000 Pa to meet the fire protection requirements applicable to VB air inlets.

OPTIONS

The flap may feature a galvanised steel trim to offer uniform aesthetics, protect access to the wiring and prevent vandalism. The trim may be painted with the RAL colour of your choice.

SIZE RANGES AND AIR PASSAGE (DM²) 1-FLAP DAMPER

H/L	300	350	400	450	500	550	600	650	700
300	4,5	5,7	6,9	8,1	9,4	10,6	11,8	13	14,2
350	5,7	7,2	8,6	10,1	11,6	13	14,5	16	17,4
400	6,9	8,6	10,4	12,1	13,8	15,5	17,2	18,9	20,6
450	8,1	10,1	12,1	14	16	18	19,9	21,9	23,9
500	9,4	11,613	13,8	16	18,2	20,4	22,6	24,9	27,1
550	10,6	13	15,5	18	20,4	22,9	25,4	27,8	30,3
600	11,8	14,5	17,2	19,9	22,6	25,4	28,1	30,8	33,5
650	13	16	18,9	21,9	24,9	27,8	30,8	33,8	36,7
700	14,2	17,4	20,6	23,9	27,1	30,3	33,5	36,7	39,9
750	15,4	18,9	22,4	25,8	29,3	32,8	36,2	39,7	43,1
800	16,6	20,4	24,1	27,8	31,5	35,2	38,9	42,6	46,4
850	17,9	21,8	25,8	29,8	33,7	37,7	41,6	45,6	49,6
900	19,1	23,3	27,5	31,7	35,9	40,1	44,4	48,6	52,8

SIZE RANGES AND AIR PASSAGE (DM²) 2-FLAPS DAMPER

H/L	450	500	550	600	650	700	750	800	850	900	950	1000
300	7,7	8,9	10,1	11,3	12,5	13,7	15	16,2	17,4	18,6	19,8	21
350	9,5	11	12,5	13,9	15,4	16,9	18,3	19,8	21,3	22,7	24,2	25,7
400	11,4	13,1	14,8	16,6	18,3	20	21,7	23,4	25,1	26,8	28,6	30,3
450	13,3	15,2	17,2	19,2	21,1	23,1	25,1	27	29	31	32,9	34,9
500	15,2	17,4	19,6	21,8	24	26,2	28,4	30,7	32,9	35,1	37,3	39,5
550	17	19,5	22	24,4	26,9	29,3	31,8	34,3	36,7	39,2	41,7	44,1
600	18,9	21,6	24,3	27	29,8	32,5	35,2	37,9	40,6	43,3	46	48,8
650	20,8	23,7	26,7	29,7	32,6	35,6	38,6	41,5	44,5	47,4	50,4	53,4
700	22,6	25,8	29,1	32,3	35,5	38,7	41,9	45,1	48,4	51,6	54,8	58
750	24,5	28	31,4	34,9	38,4	41,8	45,3	48,8	52,2	55,7	59,2	62,6
800	26,4	30,1	33,8	37,5	41,2	44,9	48,7	52,4	56,1	59,8	63,5	67,2
850	28,2	32,2	36,2	40,1	44,1	48,1	52	56	60	63,9	67,9	71,9
900	30,1	34,3	38,5	42,8	47	51,2	55,4	59,6	63,8	68	72,3	76,5
950	32	36,4	40,9	45,4	49,8	54,3	58,8	63,2	67,7	72,2	76,6	81,1
1000	33,9	38,6	43,3	48	52,7	57,4	62,1	66,9	71,6	76,3	81	85,7
1050	35,7	40,7	45,7	50,6	55,6	60,5	65,5	70,5	75,4	80,4	85,4	90,3
1100	37,6	42,8	48	53,2	58,5	63,7	68,9	74,1	79,3	84,5	89,7	95
1150	39,5	44,9	50,4	55,9	61,3	66,8	72,3	77,7	83,2	88,6	94,1	99,6
1200	41,3	47	52,8	58,5	64,2	69,9	75,6	81,3	87,1	92,8	98,5	104,2

Zone EI 60 S Moteur de réarmement LOCKTONE non compatible

RECOMMENDATIONS

- Standard NF-D-61932 requires limit position signal contacts when the damper is installed on a shared duct.
- Standard NF-S-61932 specifies the requirements applicable to remote and wired control lines.
- Standard NF-S-61933 specified periodical operational inspections for smoke exhaust dampers.

Presentation of mounting frame for OPTONE smoke exhaust damper

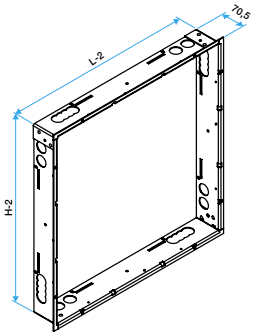

ADVANTAGES

- *Simplicity: Nominal dimensions = embedding dimension.*
- *Reversible mounting frame top/bottom.*
- *Same mounting frame for all OPTONE models.*
- *Built-in cable passages.*

COMPLIANCE(S)

- *The mounting-frame is mandatory to respect the fire resistance classification.*

INSTALLATION

- The mounting-frame is an indispensable accessory that ensures the smoke exhaust damper is installed correctly. It not only offers a good base for the installation work, it enable the damper to be mounted and removed easily throughout the life of the building.
- The OPTONE mounting-frame is reversible, so ensure the width and height dimensions are correctly respected.
- The same mounting frame can be used for both the OPTONE «+ Grille» model and the OPTONE «Classic» model, and also for single single-leaf or double-leaf versions.
- The mounting-frame is selected simply on the basis of the nominal width*height dimensions.

- The OPTONE mounting-frame is designed to be fixed by screws or using mortar.
- To seal in place using mortar, unfold the four the four anchor tabs before positioning the mounting-frame in the duct.
- To attach withscrews, use the holes other than any marked a or b.
- The OPTONE smoke exhaust damper requires the passage of electrical cables; so the instructions on the label should be respected.

This label is affixed to each mounting-frame.

DIMENSIONS OF MOUNTING FRAME (mm)

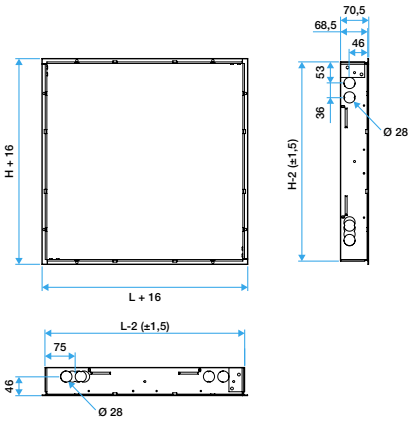

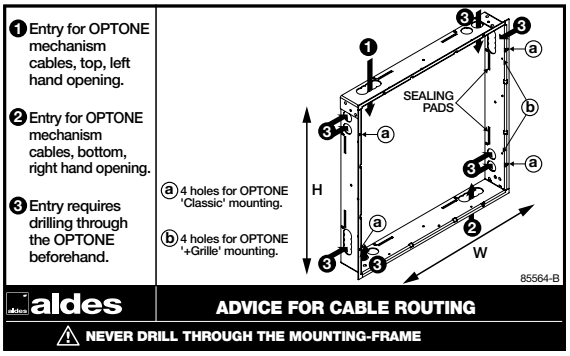

RECOMMENDATIONS

- Standard NF-S-61.932 requires limit position signal contacts when the damper is installed on a shared duct.
- Standard NF-S-61932 specifies the requirements applicable to remote and wired control lines.
- Standard NF-S-61933 specified periodical operational inspections for smoke exhaust dampers.

Installation instructions for OPTONE smoke exhaust dampers

EXAMPLE

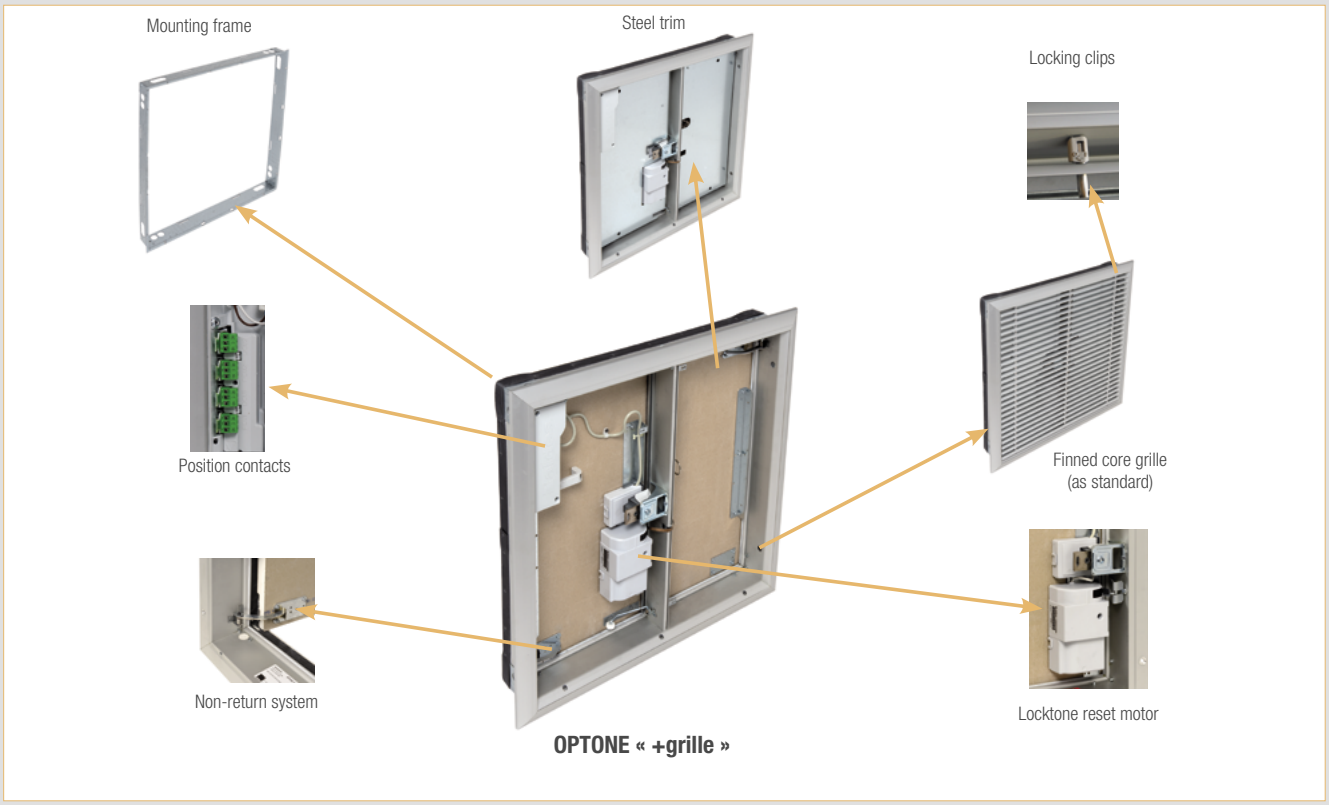

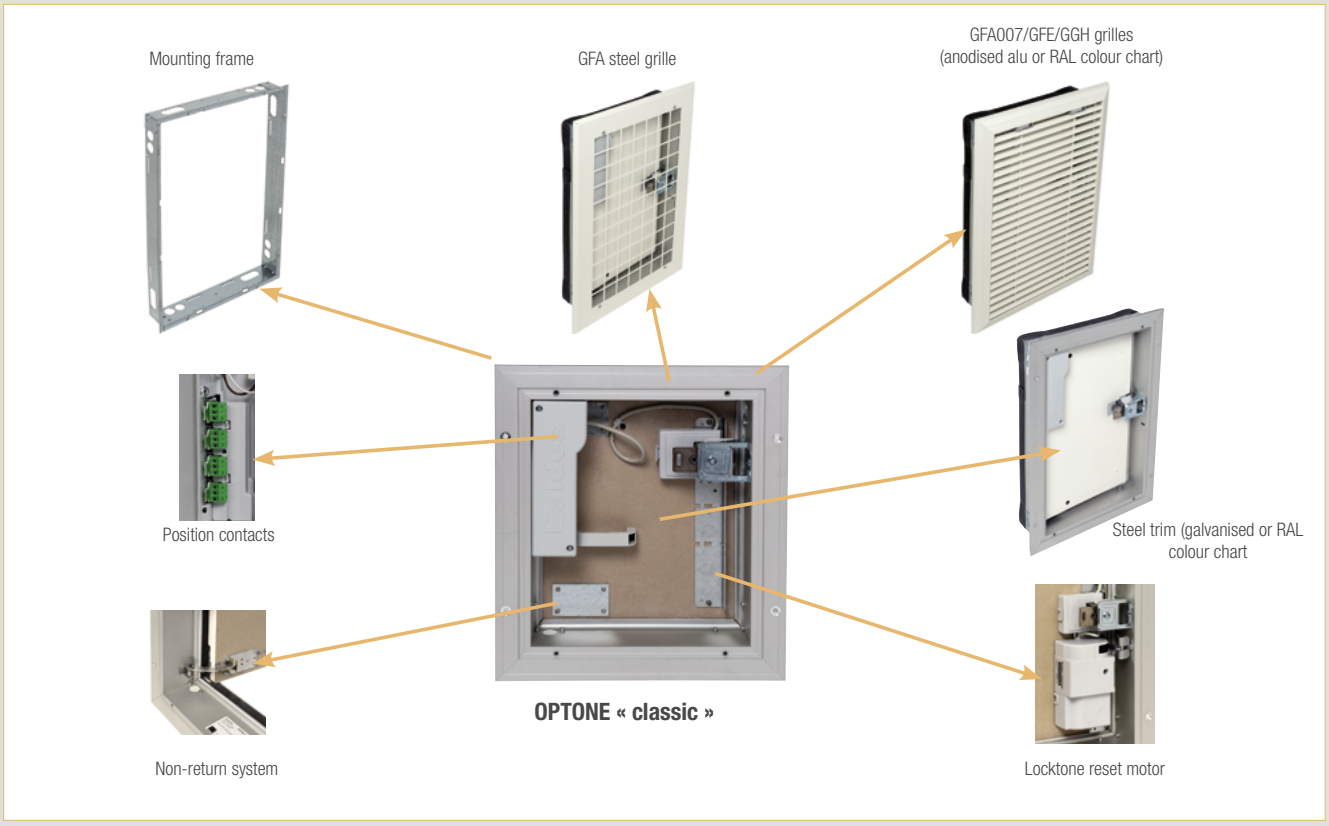

OPTONE «+ Grille» smoke damper range

OPTONE «+Grille» 1-flap without finned core.

OPTONE «+Grille» 1-flap with finned core.

ADVANTAGES

- *Simplicity: Nominal dimensions = embedding dimension.*
- *Reversible mounting-frame top/bottom.*
- *Same mounting-frame for all OPTONE models.*
- *Built-in cable passages.*
- *All dampers can be motorised.*
- *New: locking clip of the vane core.*

COMPLIANCE(S)

- *Compliant with CE marking as per EN 12101-8: 1812 - CPD -1053.*
- *EI 90 (ved-i o)-S-1000 Pa - AA multi.*
- *EI 60 S for H > 1000.*

RANGE (WITH CHOICE OF OPTIONS)

Designation	Reference	Discount family
OPTONE « +Grille » 1-flap	11044410	***15***
OPTONE « + Grille » 2-flaps	11044411	***15***

INSTALLATION

For which installation?

- Qualified on a Promatect L500 smoke exhaust duct and on ducts compliant with EN 1366-9 of the same material and same density.
- The «multi-compartment» smoke exhaust dampers are suitable for «single-compartment» applications.
- The fire classification stipulates the service pressure: the damper must not be subjected to pressures > -1000 Pa.
- Fire direction: like all smoke exhaust dampers, respect fire inside the smoke exhaust duct (when the damper is closed).

How?

- The nominal W x H dimensions of the damper correspond to the dimensions of the reservation required to embed the mounting-frame, without travel. To install a mortar-sealed mounting-frame, add the desired thickness of the mortar to the W x H dimensions.
- The OPTONE damper is reversible:
  - box on upper left = cable passage on upper left + left opening for single leaf versions,
  - box on lower right = cable passage on lower right + right opening for single leaf versions.

What fixing method to use?

- Embedded in a vertical smoke exhaust duct.
- The mounting-frame is fixed in a duct sleeve with a minimum length of 110 mm, attached with 8 VBA screws Ø 5 x 70 mm (not supplied).
- The damper is fixed in place using four self-tapping screws supplied.
- Fixed on the front face using the drilled holes in the mounting-frame

ACCESSORIES

Designation	Reference
Mounting-frame OPTONE 1-flap-2-flaps	11044406
BAG OF 10 LOCKING CLIPS (used to lock the vane core on OPTONE «+Grille» units)	11044415
Kit Steel trim 1 flap	11144404
Kit Steel trim 2 flaps	11144405
LOCKTONE motor kit for Optone single-flap (to power the reset function on OPTONE single-flap after installation)	11044398
LOCKTONE motor kit for Optone double-flap (to power the reset function on OPTONE single-flap after installation)	11044399
NON-RETURN KITS (X6) FOR OPTONE	11044387

OPTONE "+GRILLE" DIMENSIONS (mm)

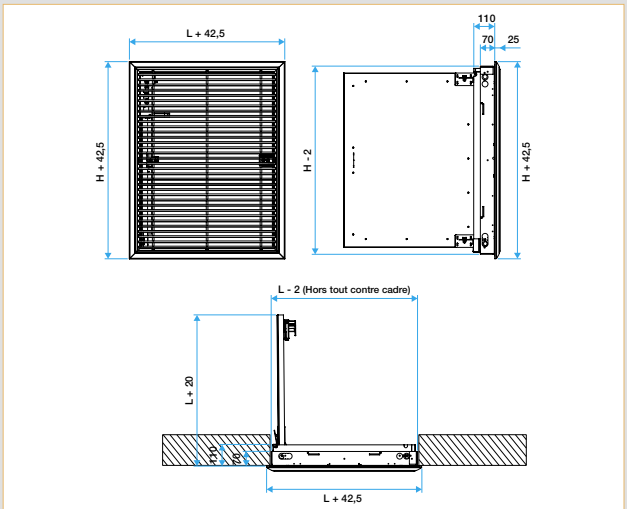

Optone «+ Grille» 1-flap with its mounting-frame

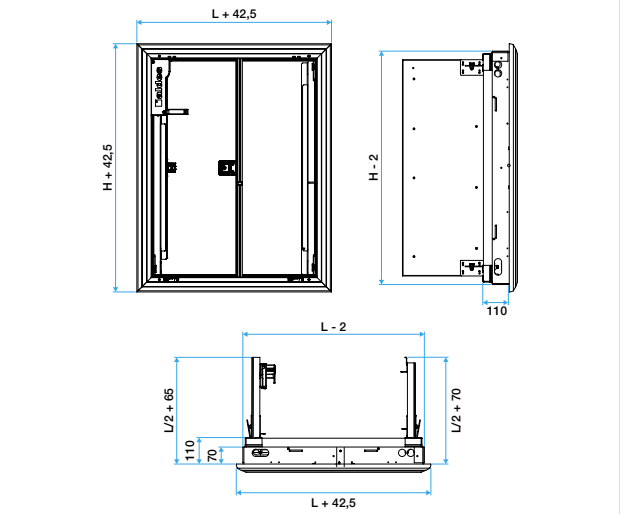

Optone «+ Grille» 2-flaps with its mounting-frame

OPTONE mounting frame

DESCRIPTION

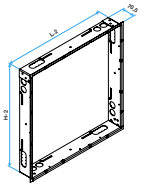

- Accepts all OPTONE models.
- Reversible: indifferent mounting direction.
- 70 mm depth for solid mounting on duct.
- Designed for installation on any type of material.
- Drilled to enable passage of electric wiring.
- Pre-drilled to accept damper fastening screws.
- Dimensions : from 300 x 300 to 1000 x 1200 mm

OPTONE «+Grille» single-flap

DESCRIPTION

- The electromagnetic actuator is included. Specify the trip mode: power emission or power cut-off, 24 or 48 VDC. The NF-S-61937 standard requires the power emission mode for collective duct; standard NF-S-61932 requires signalling contacts (FCU and DCU) in collective ducts. A grille is mandatory to respect the damper degree.
- Patented model: the grille framework is sealed with the damper body to save time during the installation (facilitating installation and eliminating the need to search for the right grille model).

AVAILABLE CHOICE OF OPTIONS

Designation	Reference
DCU1 Closed position contacts	44391
FCU1 Open position contacts	44393
DCU1 Closed position contacts	44390
FCU1 Open position contacts	44392
DCU2 Closed position contacts	BRUT
FCU2 Open position contacts	PEINT
Non-return damper 1-flap	ANTI1
Locking clips for grille	CLIP1
Reset motor LOCKTONE (Imax 2,5A)	44398

RANGE AND FREE AIR PASSAGE (DM²)

Optone +Grille 1-flap 11044410									
H	Width L								
	300	350	400	450	500	550	600	650	700
300	4.5	5.7	6.9	8.1	9.4	10.6	11.8	13.0	14.2
350	5.7	7.2	8.6	10.1	11.6	13.0	14.5	16.0	17.4
400	6.9	8.6	10.4	12.1	13.8	15.5	17.2	18.9	20.6
450	8.1	10.1	12.1	14.0	16.0	18.0	19.9	21.9	23.9
500	9.4	11.6	13.8	16.0	18.2	20.4	22.6	24.9	27.1
550	10.6	13.0	15.5	18.0	20.4	22.9	25.4	27.8	30.3
600	11.8	14.5	17.2	19.9	22.6	25.4	28.1	30.8	33.5
650	13.0	16.0	18.9	21.9	24.9	27.8	30.8	33.8	36.7
700	14.2	17.4	20.6	23.9	27.1	30.3	33.5	36.7	39.9
750	15.4	18.9	22.4	25.8	29.3	32.8	36.2	39.7	43.1
800	16.6	20.4	24.1	27.8	31.5	35.2	38.9	42.6	46.4
850	17.9	21.8	25.8	29.8	33.7	37.7	41.6	45.6	49.6
900	19.1	23.3	27.5	31.7	35.9	40.1	44.4	48.6	52.8

Footprint incompatible with LOCKTONE reset motor.

OPTONE «+Grille» double-flaps

DESCRIPTION

- Patented model: the grille framework is sealed with the damper body to save time during the installation (facilitating installation and eliminating the need to search for the right grille model).
- The electromagnetic actuator is included. Specify the trip mode: power emission or power cut-off, 24 or 48 VDC. The NF-S-61937 standard requires the power emission mode for collective duct; standard NF-S-61932 requires signalling contacts (FCU and DCU) in collective ducts. A grille is mandatory to respect the damper degree.

AVAILABLE CHOICE OF OPTIONS

Designation	Reference
DCU1 Closed position contacts	44391
FCU1 Open position contacts	44393
DCU1 Closed position contacts	44390
FCU1 Open position contacts	44392
DCU2 Closed position contacts	BRUT
FCU2 Open position contacts	PEINT
Non-return damper 1-flap	ANTI1
Locking clips for grille	CLIP1
Reset motor LOCKTONE (Imax 2,5A)	44398

RANGE AND FREE AIR PASSAGE (DM²)

Optone +Grille 2-flaps - 11044411												
H	Width L											
	450	500	550	600	650	700	750	800	850	900	950	1000
300	7,7	8,9	10,1	11,3	12,5	13,7	15,0	16,2	17,4	18,6	19,8	21,0
350	9,5	11,0	12,5	13,9	15,4	16,9	18,3	19,8	21,3	22,7	24,2	25,7
400	11,4	13,1	14,8	16,6	18,3	20,0	21,7	23,4	25,1	26,8	28,6	30,3
450	13,3	15,2	17,2	19,2	21,1	23,1	25,1	27,0	29,0	31,0	32,9	34,9
500	15,2	17,4	19,6	21,8	24,0	26,2	28,4	30,7	32,9	35,1	37,3	39,5
550	17,0	19,5	22,0	24,4	26,9	29,3	31,8	34,3	36,7	39,2	41,7	44,1
600	18,9	21,6	24,3	27,0	29,8	32,5	35,2	37,9	40,6	43,3	46,0	48,8
650	20,8	23,7	26,7	29,7	32,6	35,6	38,6	41,5	44,5	47,4	50,4	53,4
700	22,6	25,8	29,1	32,3	35,5	38,7	41,9	45,1	48,4	51,6	54,8	58,0
750	24,5	28,0	31,4	34,9	38,4	41,8	45,3	48,8	52,2	55,7	59,2	62,6
800	26,4	30,1	33,8	37,5	41,2	44,9	48,7	52,4	56,1	59,8	63,5	67,2
850	28,2	32,2	36,2	40,1	44,1	48,1	52,0	56,0	60,0	63,9	67,9	71,9
900	30,1	34,3	38,5	42,8	47,0	51,2	55,4	59,6	63,8	68,0	72,3	76,5
950	32,0	36,4	40,9	45,4	49,8	54,3	58,8	63,2	67,7	72,2	76,6	81,1
1000	33,9	38,6	43,3	48,0	52,7	57,4	62,1	66,9	71,6	76,3	81,0	85,7
1050	35,7	40,7	45,7	50,6	55,6	60,5	65,5	70,5	75,4	80,4	85,4	90,3
1100	37,6	42,8	48,0	53,2	58,5	63,7	68,9	74,1	79,3	84,5	89,7	95,0
1150	39,5	44,9	50,4	55,9	61,3	66,8	72,3	77,7	83,2	88,6	94,1	99,6
1200	41,3	47,0	52,8	58,5	64,2	69,9	75,6	81,3	87,1	92,8	98,5	104,2

EI 60 S Zone - Footprint incompatible with LOCKTONE reset motor.

OPTONE «Classic» smoke damper

OPTONE «Classic» 1-flap
and GFA007 grille

OPTONE «Classic» 1-flap,
steel trim and GFA007 grille RAL 9010

ADVANTAGES

- *Simplicity: Nominal dimensions = embedding dimension.*
- *Reversible mounting-frame top/bottom.*
- *Same mounting-frame for all OPTONE models.*
- *Built-in cable passages.*
- *All dampers can be motorised.*
- *New, damper in 5 mm steps for renovation*

COMPLIANCE(S)

- *Compliant with CE marking as per EN 12101-8: 1812 - CPD -1053.*
- *EI 90 (ved-i o) S 1000 Pa - AA multi.*
- *EI 1200 (ved-i o) S 1000 Pa - AA multi.*
- *EI 60 S for H > 1000.*

RANGE (WITH CHOICE OF OPTIONS)

Designation	Reference	Discount family
OPTONE «Classic» 1-flap (EI 90 S)	11044420	***15***
OPTONE «Classic» 2-flaps (EI 90 S)	11044421	***15***
OPTONE CLASSIC - 2H/1-flap	11044430	***15***
OPTONE «Classic» 2H/2-flaps (EI 120 S, H maxi=1000)	11044431	***15***

INSTALLATION

For which installation?

- Qualified on a Promatect L500 smoke exhaust duct and on ducts compliant with EN 1366-9 of the same material and same density.
- The «multi-compartment» smoke exhaust dampers are suitable for «single-compartment» applications.
- The fire classification stipulates the service pressure: the damper must not be subjected to pressures > -1000 Pa.
- Fire direction: like all smoke exhaust dampers, respect fire inside the smoke exhaust duct (when the damper is closed).

How?

- The nominal W x H dimensions of the damper correspond to the dimensions of the reservation required to embed the mounting-frame, without travel. To install a mortar-sealed mounting-frame, add the desired thickness of the mortar to the W x H dimensions.
- The OPTONE damper is reversible:
  - box on upper left = cable passage on upper left + left opening for single leaf versions,
  - box on lower right = cable passage on lower right + right opening for single leaf versions.

What fixing method to use?

- Embedded in a vertical smoke exhaust duct.
- The mounting-frame is fixed in a duct sleeve with a minimum length of 110 mm, attached with 8 VBA screws Ø 5 x 70 mm (not supplied).
- The damper is fixed in place using four self-tapping screws supplied.
- Fixed on the front face using the drilled holes in the mounting-frame.

Designation of OPTONE GFA 007

DESCRIPTION

- The OPTONE "Classic" damper can be fitted with a GFA 007 grill that has all the same characteristics as the GFA 007 on the old VANTONE dampers.
- Code 11044408 GFA 007 OPTONE "Classic" can be fixed to either single-leaf or double-leaf dampers using the 4 inserts located on the front of the OPTONE damper.

ACCESSORIES

Designation	Reference
Mounting-frame OPTONE 1-flap-2-flaps	11044406
GFA 007 grille OPTONE 1 flap-2 flaps	11044408
GFA steel grille OPTONE 1 flap-2 flaps	11044409
Kit Steel trim 1 flap	11144404
Kit Steel trim 2 flaps	11144405
LOCKTONE motor kit for Optone single-flap (to power the reset function on OPTONE single-flap after installation)	11044398
LOCKTONE motor kit for Optone double-flap (to power the reset function on OPTONE single-flap after installation)	11044399
NON-RETURN KITS (X6) FOR OPTONE	11044387

OPTONE "CLASSIC" DIMENSIONS (MM)

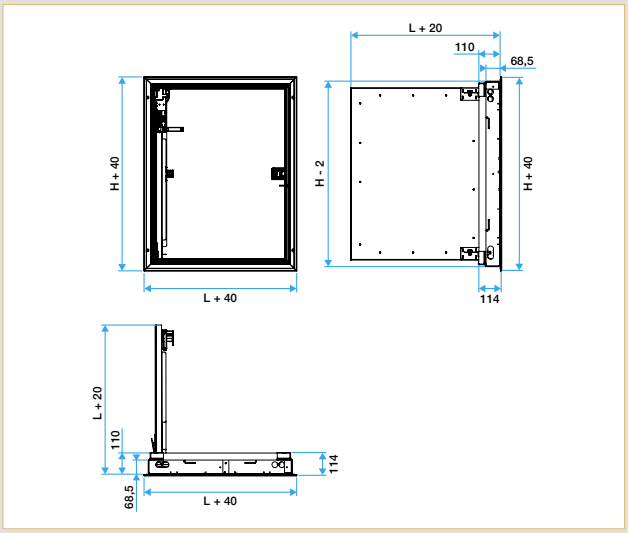

Optone «Classic» 1-flap with its mounting-frame

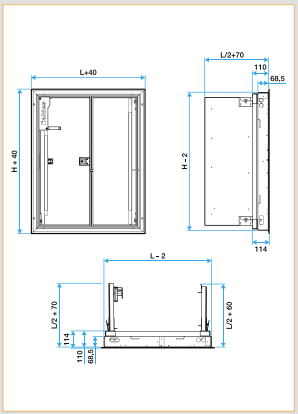

Optone «Classic» 2-flaps with its mounting-frame

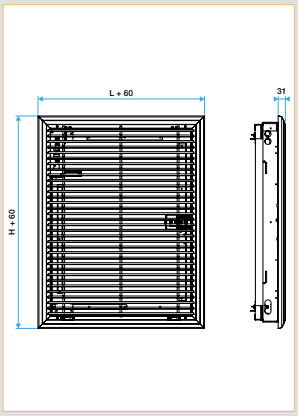

With GFA 007 grille

OPTONE mounting frame

DESCRIPTION

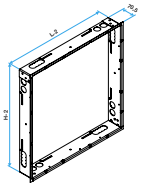

- Accepts all OPTONE models.
- Reversible: indifferent mounting direction.
- 70 mm depth for solid mounting on duct.
- Designed for installation on any type of material.
- Drilled to enable passage of electric wiring.
- Pre-drilled to accept damper fastening screws.
- Dimensions : from 300 x 300 to 1000 x 1200 mm.

OPTONE «Classic» 1-flap

AVAILABLE CHOICE OF OPTIONS

Designation	Reference
DCU1 Closed position contacts	44391
FCU1 Open position contacts	44393
DCU1 Closed position contacts	44390
FCU1 Open position contacts	44392
DCU2 Closed position contacts	BRUT
FCU2 Open position contacts	PEINT
Non-return damper 1-flap	ANTI1
Reset motor LOCKTONE (Imax 2,5A)	44398

RANGE AND FREE AIR PASSAGE (DM²)

Optone «Classic» 1-flap 11044410									
H	Width L								
	300	350	400	450	500	550	600	650	700
300	4.5	5.7	6.9	8.1	9.4	10.6	11.8	13.0	14.2
350	5.7	7.2	8.6	10.1	11.6	13.0	14.5	16.0	17.4
400	6.9	8.6	10.4	12.1	13.8	15.5	17.2	18.9	20.6
450	8.1	10.1	12.1	14.0	16.0	18.0	19.9	21.9	23.9
500	9.4	11.6	13.8	16.0	18.2	20.4	22.6	24.9	27.1
550	10.6	13.0	15.5	18.0	20.4	22.9	25.4	27.8	30.3
600	11.8	14.5	17.2	19.9	22.6	25.4	28.1	30.8	33.5
650	13.0	16.0	18.9	21.9	24.9	27.8	30.8	33.8	36.7
700	14.2	17.4	20.6	23.9	27.1	30.3	33.5	36.7	39.9
750	15.4	18.9	22.4	25.8	29.3	32.8	36.2	39.7	43.1
800	16.6	20.4	24.1	27.8	31.5	35.2	38.9	42.6	46.4
850	17.9	21.8	25.8	29.8	33.7	37.7	41.6	45.6	49.6
900	19.1	23.3	27.5	31.7	35.9	40.1	44.4	48.6	52.8

Footprint incompatible with LOCKTONE reset motor.

- For a EI 120 S fire resistance, use the code 11044430: + value 4%
- The electromagnetic actuator is included. Specify the trip mode: power emission or power cut-off, 24 or 48 VDC. The NF-S-61937 standard requires the power emission mode for collective duct; standard NF-S-61932 requires signalling contacts (FCU and DCU) in collective ducts. A grille is mandatory to respect the damper degree.

OPTONE « Classic » 2-flaps

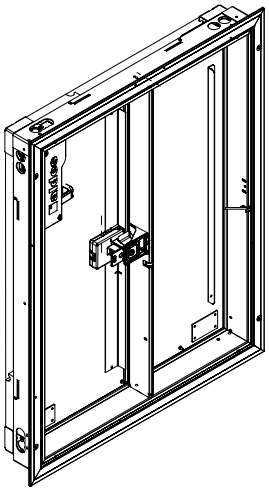

AVAILABLE CHOICE OF OPTIONS

Designation	Reference
DCU1 Closed position contacts	44391
FCU1 Open position contacts	44393
DCU2 Closed position contacts	44390
FCU2 Open position contacts	44392
Galvanised steel trim	BRUT
Painted steel trim	PEINT
Non-return damper 1-flap	ANTI1
Reset motor LOCKTONE (Imax 2,5A)	44398

RANGE AND FREE AIR PASSAGE (DM²)

Optone «Classic» 2-flaps - 11044411												
H	Width L											
	450	500	550	600	650	700	750	800	850	900	950	1000
300	7,7	8,9	10,1	11,3	12,5	13,7	15,0	16,2	17,4	18,6	19,8	21,0
350	9,5	11,0	12,5	13,9	15,4	16,9	18,3	19,8	21,3	22,7	24,2	25,7
400	11,4	13,1	14,8	16,6	18,3	20,0	21,7	23,4	25,1	26,8	28,6	30,3
450	13,3	15,2	17,2	19,2	21,1	23,1	25,1	27,0	29,0	31,0	32,9	34,9
500	15,2	17,4	19,6	21,8	24,0	26,2	28,4	30,7	32,9	35,1	37,3	39,5
550	17,0	19,5	22,0	24,4	26,9	29,3	31,8	34,3	36,7	39,2	41,7	44,1
600	18,9	21,6	24,3	27,0	29,8	32,5	35,2	37,9	40,6	43,3	46,0	48,8
650	20,8	23,7	26,7	29,7	32,6	35,6	38,6	41,5	44,5	47,4	50,4	53,4
700	22,6	25,8	29,1	32,3	35,5	38,7	41,9	45,1	48,4	51,6	54,8	58,0
750	24,5	28,0	31,4	34,9	38,4	41,8	45,3	48,8	52,2	55,7	59,2	62,6
800	26,4	30,1	33,8	37,5	41,2	44,9	48,7	52,4	56,1	59,8	63,5	67,2
850	28,2	32,2	36,2	40,1	44,1	48,1	52,0	56,0	60,0	63,9	67,9	71,9
900	30,1	34,3	38,5	42,8	47,0	51,2	55,4	59,6	63,8	68,0	72,3	76,5
950	32,0	36,4	40,9	45,4	49,8	54,3	58,8	63,2	67,7	72,2	76,6	81,1
1000	33,9	38,6	43,3	48,0	52,7	57,4	62,1	66,9	71,6	76,3	81,0	85,7
1050	35,7	40,7	45,7	50,6	55,6	60,5	65,5	70,5	75,4	80,4	85,4	90,3
1100	37,6	42,8	48,0	53,2	58,5	63,7	68,9	74,1	79,3	84,5	89,7	95,0
1150	39,5	44,9	50,4	55,9	61,3	66,8	72,3	77,7	83,2	88,6	94,1	99,6
1200	41,3	47,0	52,8	58,5	64,2	69,9	75,6	81,3	87,1	92,8	98,5	104,2

EI 60 S Zone (H≥1000) - Footprint incompatible with LOCKTONE reset motor.

- For a EI 120 S fire resistance, use the code 11044431 (Max. height H= 1000 mm): + value 4%
- The electromagnetic actuator is included. Specify the trip mode: power emission or power cut-off, 24 or 48 VDC. The NF-S-61937 standard requires the power emission mode for collective duct; standard NF-S-61932 requires signalling contacts (FCU and DCU) in collective ducts. A grille is mandatory to respect the damper degree.

OPTONE 1-flap - 2-flaps mounting frame

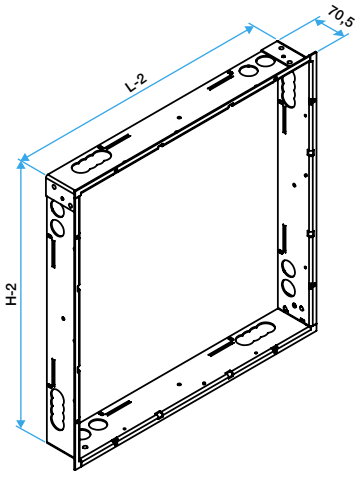

DESCRIPTION

- Reference : 11044406.
- Accepts all OPTONE models.
- Reversible: indifferent mounting direction.
- 70 mm depth for solid mounting on duct.
- Designed for installation on any type of material.
- Drilled to enable passage of electric wiring.
- Pre-drilled to accept damper fastening screws.
- Dimensions : from 300 x 300 to 1000 x 1200 mm.

GFA 007 grille for OPTONE «Classic»

DESCRIPTION

- This grille attaches in all OPTONE «Classic» model.
- GFA 007 grill to fix on front face of OPTONE “Classic” damper,
- Grille with the clip 007 which makes it possible to suspend the finned-core whilst resetting after smoke clearance.

The GFA 007 is a aesthetic grille with curved vanes.
For a damper:
-in low position: orient the fins upwards,
-in high position:orient the fins downwards.

- A high-resistance epoxy paint can be requested depending on the RAL colour code required. The paint is not applied to the 007 clip.
- Dimensions : from 300 x 300 to 1000 x 1200 mm.
- NEW : Available with Aldes Architect painting.

Designation	Reference
«Overall dimensions + 50 mm» option	PLUS50
Standard RAL 9010 colour (55%)	9010
Other RAL group 1	RAL1
Other RAL group 2	RAL2
Other RAL group 3	RAL4

LOCKTONE reset motor for OPTONE dampers

ADVANTAGES

- *Fits to all OPTONE 1 & 2-flap dampers.*
- *Simple to install.*
- *Resets in less than 30 s.*
- *Facilitates regulatory inspections.*

INTRODUCTION

In accordance with the new European regulations, Aldes has developed a new range of OPTONE CE dampers, replacing the VANTONE range.
For the motorised reset version, ALDES has continued with the principle of upgradeability already employed successfully with the ISONE dampers: the OPTONE dampers can be fitted with the new LOCKTONE reset motor at any time.

PRESENTATION

Fitted to the gate, LOCKTONE has no impact on the airflow passage nor on pressure drop levels. LOCKTONE is available as:
1. An option for the OPTONE damper: the motor is fitted and connected to the damper in the factory,
2. As an accessory or kit: the motor is to be installed on-site, simple as, the OPTONE dampers are designed with this in mind, integrating, as standard, a drilled bracket and suitable electrical cabling.
The fitting of the LOCKTONE has been simplified and can be completed in just a couple of minutes.

WARNING

The smallest OPTONES will be incompatible with the LOCKTONE motor:
(NOTE: these dimensions do not exist for VANTONE-M models).

OPTONE 1-FLAP «CLASSIC» OR «+ GRILLE»

	Width L								
Height H	**300**	**350**	**400**	**450**	**500**	**550**	**600**	**650**	**700**
300	*No*	*No*	*No*	*No*	*No*	*No*	*No*	*No*	*No*
350	*No*	*No*	*No*	*No*	*No*	*No*	*No*	*No*	*No*
400	*No*	ok	ok	ok	ok	ok	ok	ok	ok
450	*No*	ok	ok	ok	ok	ok	ok	ok	ok
500	*No*	ok	ok	ok	ok	ok	ok	ok	ok
550	ok	ok	ok	ok	ok	ok	ok	ok	ok
600	ok	ok	ok	ok	ok	ok	ok	ok	ok
650	ok	ok	ok	ok	ok	ok	ok	ok	ok
700	ok	ok	ok	ok	ok	ok	ok	ok	ok
750	ok	ok	ok	ok	ok	ok	ok	ok	ok
800	ok	ok	ok	ok	ok	ok	ok	ok	ok
850	ok	ok	ok	ok	ok	ok	ok	ok	ok
900	ok	ok	ok	ok	ok	ok	ok	ok	ok

OPTONE 2-FLAPS «CLASSIC» OR «+ GRILLE»

	Width L											
Height H	**450**	**500**	**550**	**600**	**650**	**700**	**750**	**800**	**850**	**900**	**950**	**1000**
300	*No*	*No*	*No*	*No*	*No*	*No*	*No*	*No*	*No*	*No*	*No*	*No*
350	*No*	*No*	*No*	*No*	*No*	*No*	*No*	*No*	*No*	*No*	*No*	*No*
400	*No*	*No*	*No*	ok	ok	ok	ok	ok	ok	ok	ok	ok
450	*No*	*No*	*No*	ok	ok	ok	ok	ok	ok	ok	ok	ok
500	*No*	*No*	*No*	ok	ok	ok	ok	ok	ok	ok	ok	ok
550	*No*	*No*	*No*	ok	ok	ok	ok	ok	ok	ok	ok	ok
600	*No*	ok	ok	ok	ok	ok	ok	ok	ok	ok	ok	ok
650	*No*	ok	ok	ok	ok	ok	ok	ok	ok	ok	ok	ok
700	*No*	ok	ok	ok	ok	ok	ok	ok	ok	ok	ok	ok
750	*No*	ok	ok	ok	ok	ok	ok	ok	ok	ok	ok	ok
800	*No*	ok	ok	ok	ok	ok	ok	ok	ok	ok	ok	ok
850	*No*	ok	ok	ok	ok	ok	ok	ok	ok	ok	ok	ok
900	*No*	ok	ok	ok	ok	ok	ok	ok	ok	ok	ok	ok
950	*No*	ok	ok	ok	ok	ok	ok	ok	ok	ok	ok	ok
1000	*No*	ok	ok	ok	ok	ok	ok	ok	ok	ok	ok	ok
1050	*No*	ok	ok	ok	ok	ok	ok	ok	ok	ok	ok	ok
1100	*No*	ok	ok	ok	ok	ok	ok	ok	ok	ok	ok	ok
1150	*No*	ok	ok	ok	ok	ok	ok	ok	ok	ok	ok	ok
1200	*No*	ok	ok	ok	ok	ok	ok	ok	ok	ok	ok	ok

Note: The OPTONE.H model designed for type 3E and 4 residential buildings has a specific terminal and cannot be used with the LOCKTONE motor.

LOCKTONE reset motor for OPTONE dampers

INSTALLATION

Installation of the motor (1 min)

1. Position the two metal lugs in the two slots in the bracket, below the trigger.
2. Tighten the 2 screws (supplied).

Fit the ribbon winder (20 seconds)

1. The motor feeds out a wound ribbon fitted with a hook.
2. For OPTONE 1-flap models, unwind the ribbon and attach the hook to the hole in the aluminium frame by turning it a quarter of a turn.
3. For OPTONE 2-flap models, attach the roller in the intermediate riser before unwinding the ribbon and attaching the ring to the 'slave' flap.

Electrical connections (1 min)

1. The LOCKTONE is fitted with a quick-fit connector.
2. On the damper, open the trigger unit housing to identify the connector position.
3. Plug the supplied connector into the two green and yellow wires (already stripped), connect it to the motor and position them in free space.
4. Repeat the operation for the main box.
5. Connect the power supply cables to the main terminal.
6. Close the covers.

TECHNICAL CHARACTERISTICS

- LOCKTONE option Code : OPT44398.
- LOCKTONE kit Code :
-11044398 for OPTONE 1-flap
-11044398 for OPTONE 2-flap.
- PS = 24 to 48 V dc or 48 V ac
(not compatible with 24 V ac).
- Max. current = 2.2 A under 24V; 1.10 A under 48 V.
- Response time < 30 s.
- Automatic stop at end of cycle, 5 seconds pause between two cycles.
- Operating temperatures: 0 to +50°C.
- Weight = 1.4 kg.
- No specific maintenance required.
- Operating cycles: 300,
validated by NF certification.
- Reminder: power supply - V Low Voltage (Safety)
(TBTS).

GFA Steel protection grille

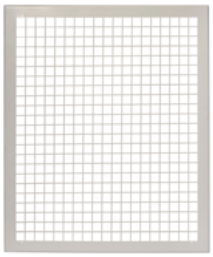

ADVANTAGES

- *No sharp edges.*
- *No cutting edges.*
- *Painted by default: ideal for cleaning.*
- *RAL paint colours available.*

RANGE (WITH CHOICE OF OPTIONS)

Designation	Reference
GFA steel grille OPTONE T-1-flap/2-flaps	11044409

- The grid dimensions W * H correspond to the nominal dimensions.

- 300 < Width W < 1000 (in steps 5 mm)
- 300 < Height H < 1200 (in steps 5 mm)

Please contact us for other sizes.

DESCRIPTION

- 1.5 mm thick steel.
- No sharp edges: inclined edges.
- Air flow passage : 95 % (in steps 50 mm).
- Conform with damper rating report.
- Mesh width : 45*45 mm.

FIELD OF APPLICATION

- Decorative and protective grid for OPTONE 1-flap/2-flaps smoke exhaust damper
- Ideal for environment requiring high security level like:
  - prisons, psychatric hospitals
  - Résidential schools

INSTALLATION

- Surface-mounted installation on damper.
- 4 tamperproof screws + torx bit supplied.

FINITION

- The standard finish is RAL 9010 (powder coating).
- Other RAL possible on request.

AVAILABLE CHOICE OF OPTIONS)

Designation	Reference
Other RAL group 1	RAL1
Other RAL group 2	RAL2
Other RAL group 3	RAL4

DIMENSIONS (MM)

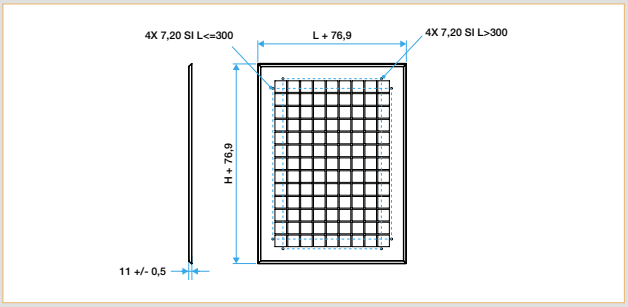

INSTALLATION

Tamperproof screw

Torx bit

OPTONE with steel trim and GFA steel grille RAL 9010

GFAP 007: surface-mounted installation with removable core.

GFAP 007 with core suspended from the 007 clips

ADVANTAGES

- *Identical to aesthetics to the GFA 007.*
- *Removable core locked by a quarter turn.*
- *EXCLUSIVE: core suspended by 007 clip.*
- *Simple to fix in place.*
- *Aesthetic and aeraulic blade design.*

RANGE (WITH CHOICE OF OPTIONS)

Designation	Reference
GFAP 007: surface-mounted with removable core.	11045335

DESCRIPTION

• The GFAP 007 grille is in every way identical to a GFA 007 grille, except that only the nominal dimensions are different. The choice of dimensions depends on the opening to be covered (nothing to do with the X,Y on an Aldes damper).
• The GFAP 007 can be fixed directly on to the wall using the spacers provided, without a mounting frame. It is particularly well suited for OXYTONE air inlets.
• Dimensions : from 250 x 100 mm to 1200 x 1000 mm (in steps of 50 mm)
• To choose the dimension of a GFAP 007, the simplest way is to apply the following rule:
- X (GFAP 007) = opening width - 50 mm,
- Y (GFAP 007) = opening height - 50 mm.

FIELD OF APPLICATION

• The GFAP 007 range is a specific code for the installation of a grille with the same aesthetic design as a GFA 007, but on a wall mounting.
• Surface-mounted installation without mounting frame.

FINITION

• The standard finish is a natural anodised sheen.
• Option: A high-resistance epoxy paint can be requested depending on the RAL colour code required. The paint is not applied to the 007 clip.

AVAILABLE CHOICE OF OPTIONS

Designation	Code
9010 std (30%±5%)	9010
Other RAL group 1	RAL1
Other RAL group 2	RAL2
Other RAL group 3	RAL4
PAINT STOCK	45010
PAINT NOT STOCK	45011
PVY	PVY

DIMENSIONS (MM)

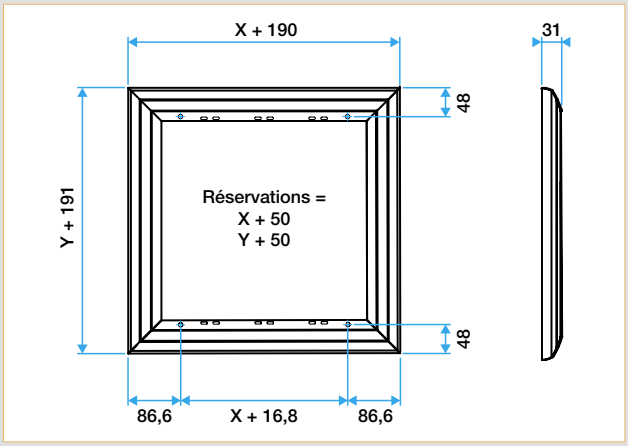

GFAP: surface-mounted with fixed core.

ADVANTAGES

- *Identical finish to the GFA Alu.*
- *Several fastening methods possible: screws, clips or hinges.*
- *Aesthetic and aeraulic blade design.*

RANGE (WITH CHOICE OF OPTIONS)

Designation	Reference
GFAP: surface-mounted with fixed core.	11045050

DESCRIPTION

- The GFAP grille is in every way identical to a GFA Aluminium grille, except that only the nominal dimensions are different. The choice of dimensions depends on the opening to be covered (nothing to do with the X,Y on an Aldes damper).
- Dimensions : from 250 x 100 mm to 1200 x 1000 mm (in steps of 50 mm)
- Mounting:
- screw-fitted directly on to the wall (screws not supplied),
- using screws, clips or hinges on the mounting frame.
- Hinge fittings require a hinge adapter kit for the mounting frame.
- GFAP grilles can be offset from the mounting frame using the adjustment kit.

FIELD OF APPLICATION

- The GFAP range is a specific code for the installation of a grille with the same aesthetic design as a GFA Alu grille, but on a wall mounting.
- Surface-mounted installation with or without mounting frame.

ACCESSORIES

Designation	Reference	Discount family
GFAP mounting-frame	11045077	
Adjustment kit for GFAP on mounting frame	11041950	80
Hinge adapter on GFAP mounting-frame	11041949	80
Hinge kit for GFA Alu	11041915	80

AVAILABLE CHOICE OF OPTIONS

Designation	Code
9010 std (30%±5%)	9010
Other RAL group 1	RAL1
Other RAL group 2	RAL2
Other RAL group 3	RAL4
PAINT STOCK	45010
PAINT NOT STOCK	45011
PVY	PVY

DIMENSIONS (MM)

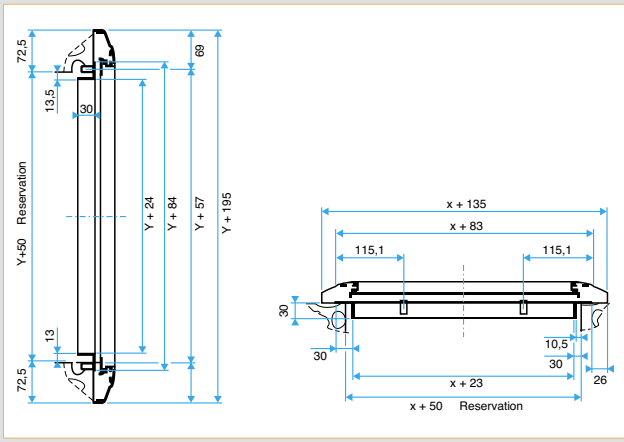

GFE visible frame and GFE 007 visible frame for flush mounting in wall

GFE 007 visible frame

Suspended open core using 007 clips

LES + PRODUITS

- *New removable core with the 007 clip for H ≤ 1000 mm.*
- *Discreet and aesthetic design as an extension of the wall.*
- *RAL paint colours available.*
- *NEW : Available with Aldes Architect offer.*

COMPLIANCE(S)

- *Complies with resistance test reports:*
  - *GFE frames fully cover the dampers,*
  - *The vane core is identical to that of a GFA Aluminium frame.*

RANGE (WITH CHOICE OF OPTIONS)

Designation	Reference
GFE 007 visible frame	11045336
GFE visible frame, optional OMEGA clip available	11045590
Mounting frame for GFE or GFE 007 visible frame	11003001

DESCRIPTION

- The vane core is identical to that for the GFA or a GFAP, see previous pages.
- Flat frame of 27 mm.

GFE 007 visible frame - product code 11045336:

- with the removable core secured by the clip 007 in the 27 mm frame
- available for reserved dimensions of W x H: 250 < W < 1200 mm & 250 < H < 1000 mm

(in steps of 25 mm).

GFE visible frame - product code 11045590:

- with vane core fixed in the 27 mm frame
- available for reserved dimensions of W x H:

250 < Width < 1200 mm

250 < Height < 1200 mm (in steps 5 mm).

Paint

- A high-resistance epoxy paint can be requested depending on the RAL colour code required.

FIELD OF APPLICATION

Building interiors do not always meet the requirements for the use of an oversize grille for GFA exhaust dampers (frame exceeds thickness of lining). With the GFE-GGH range, Aldes offers a range of aesthetically designed grilles ready for flush-mounting in the wall in front of the smoke exhaust damper. These grilles are highly appreciated by architects and are either the same dimension as the damper they mask (GFE), or large height (GGH).

INSTALLATION

- Fixation preferable using an F4 mounting frame to be fixed to the wall. The GFE is equipped with F3 clips.

EXAMPLE OF INSTALLATION

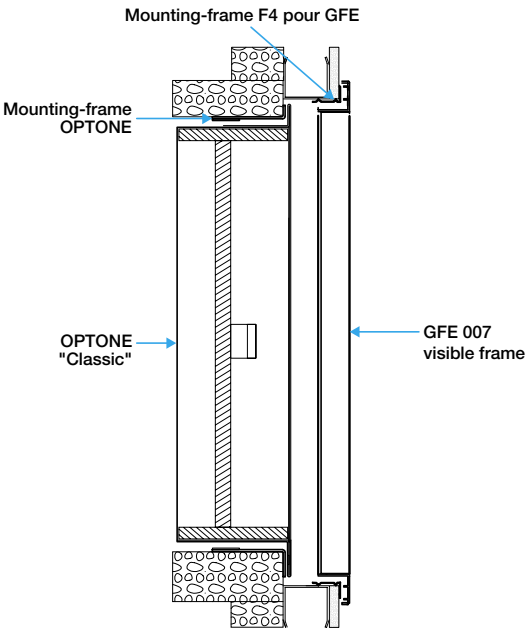

Installation with mounting frame

Optimum finition.

GFE thin frame and GFE 007 thin frame for flush mounting in wall

GFE thin frame, optional OMEGA clip

ADVANTAGES

- *New removable core featuring 007 clips for Y dimensions < 1000 mm.*
- *Discreet aesthetics for seamless integration in wall.*
- *RAL paint colours available.*
- *NEW : Available with Aldes Architect offer.*

COMPLIANCE(S)

- *Complies with resistance test reports:*
  - *GFE frames fully cover OPTONE dampers,*
  - *GFE frames finish properly PLAFONE dampers,*
  - *The vane core is identical to that of a GFA Aluminium frame.*

RANGE (WITH CHOICE OF OPTIONS)

Designation	Reference
GFE 007 slim frame	11045337
GFE slim frame, optional OMEGA clip possible	11045591

DESCRIPTION

- The frame is 'invisible' ('L' shaped cornice or just the thickness of the aluminium visible), known as 'liseré' or 'edged'.

GFE slim frame:

- with vane core secured by clip in option (invisible clip OMEGA)
- with vane core fixed in the 27 mm frame, available for reserved dimensions of W*H :

250 < Width < 1200 mm
100 < Height < 1200 mm (in steps 5 mm).

GFE 007 slim frame:

- with removable core secured by 007 clips in the 27 mm frame
- available for openings with dimensions of W x H:

250 < W < 1200 mm
100 < H < 1200 mm (in steps 5 mm).

Paint

- A high-resistance epoxy paint can be requested depending on the RAL colour code required.

FIELD OF APPLICATION

Building interiors do not always meet the requirements for the use of an oversize grille for GFA exhaust dampers (frame exceeds thickness of lining). With the GFE-GGH range, Aldes offers a range of aesthetically designed grilles ready for flush-mounting in the wall in front of the smoke exhaust damper. These grilles are highly appreciated by architects and are either the same dimension as the damper they mask (GFE), or large height (GGH).

INSTALLATION

GFE and GFE 007 slim frame:

- Fixed to wall using drilled frame.
- Screws not supplied.

EXAMPLE OF INSTALLATION GFE 007

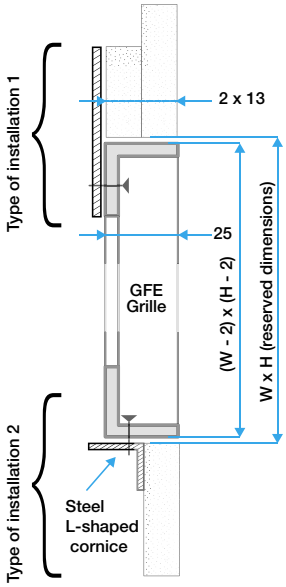

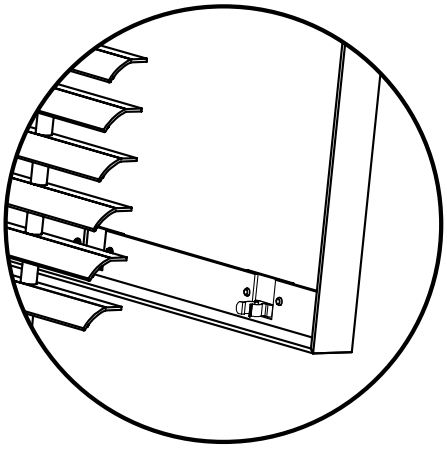

Focus on OMEGA invisible clip

GGH: Large height grille with removable core, for flush mounting in wall

ADVANTAGES

• Provides the corridor with a superb aesthetic design by alternating grilles from the floor to the ceiling.
• Identical aesthetic design for both low (VB) and high position (VH) smoke dampers.
• Easy maintenance due to the removable core.

COMPLIANCE(S)

Complies with resistance test reports:
- GGH frames fully cover the dampers,
- the vane core is identical to that of a GFA Aluminium frame.

RANGE (WITH CHOICE OF OPTIONS)

Designation	Reference
GGH VB low position opening	11045598
GGH VH high position opening	11045599

DESCRIPTION

• The frame is slim, almost totally hidden, only its thickness remains visible.
• The vane core has a vane pitch of 25 mm as it is based on the GFA.
• A vane core with a height of 1 metre can be unclipped, either in the lower part to gain access to the VB fresh air inlet dampers, or in the upper part to gain access to the VH smoke exhaust dampers.
• At request, it is possible to increase the height of the removable core for smoke exhaust dampers with an overall height in excess of 0.95 m.

FIELD OF APPLICATION

• These grilles offer an unbeatable aesthetic design!
• Positioned in front of a VB air inlet damper (low position) or a VH smoke exhaust damper (high position), the attractive design is completely identical. The only difference is that the 1m core is removable in the lower part for a VB damper and in the upper part for a VH damper. The corridor offers an unrivalled visual continuity.

INSTALLATION

• The frame is drilled for attachment to the wall (screws not supplied).
• Ensure that you do not warp the grille when mounting it. Only available with non-visible frames, these grilles are available to order for a large openings ranging from:
- 250< Weight W < 1200 mm,
- 1000< Height H < 3200 mm.
For further information, please contact your Aldes agency.

INSTALLATION

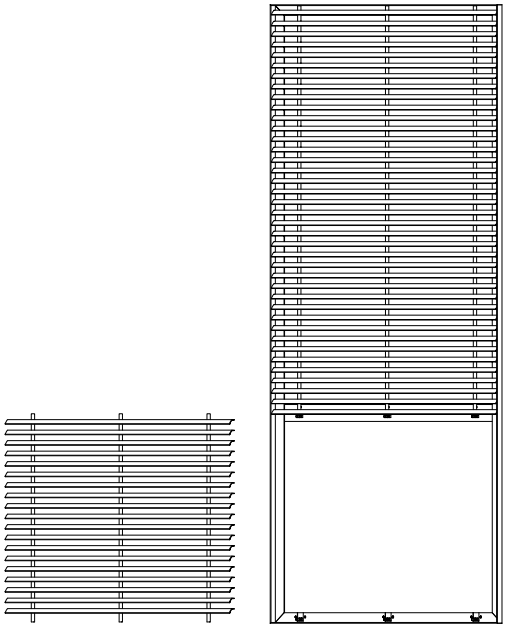

GGH VB with low position opening.

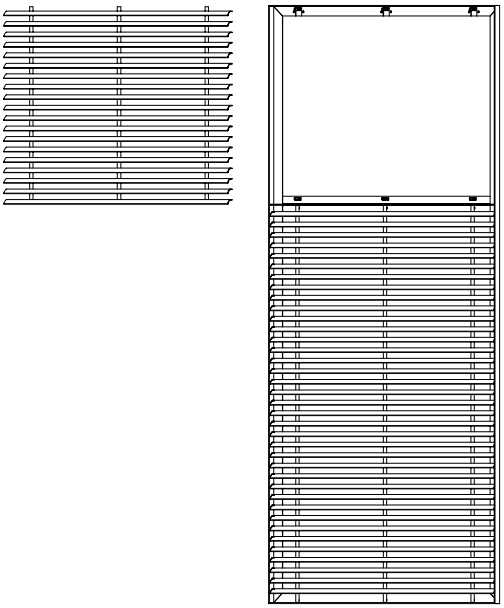

GGH VH with high position opening

Notes

Presentation of the PLAFONE tunnel damper range

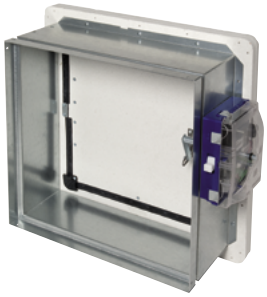

PLAFONE closed in standby position

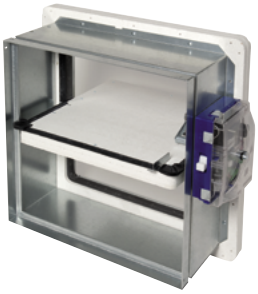

PLAFONE open in safety position

ADVANTAGES

- *Minimal leakage rate.*
- *Validated for remote installation on PROMAT duct.*
- *Upgradable ISONE mechanism.*
- *Wide range of approved duct.*

COMPLIANCE(S)

- *Compliant with CE marking as per EN 12101-8: 812-CPD-1054.*
- *EI 120 (ved-i o) S -1500 Pa - AA multi.*
- *Certified NF and compliant with NF-S-61937-10.*

INTRODUCTION

• Like gate dampers, CE marking for tunnel dampers has been obligatory since 01 February . The PLAFONE tunnel damper has been developed in accordance with all European and French requirements.

DESCRIPTION

• The PLAFONE smoke exhaust damper comprises: - Two metal sleeves on either side of a refractory material complex constituting a blade and mounting frame, - An intumescent seal and cold seal positioned between the blade and the refractory frame, to produce the required leakage airflow, - The refractory complex is drilled for mounting in the smoke exhaust duct that is compliant with EN 1366-8 or EN 1366-9, - An ISONE electrical control mechanism enabling the use of an electromagnetic trip device, up to 4 signal contacts and an EHOP reset motor.

• The nominal X and Y dimensions of the damper correspond to the installation dimensions in the duct (or duct air stream).

• Further information concerning ISONE mechanisms is available in the fire damper section.

• Smoke exhaust dampers are never fitted with fuses.

FIELD OF APPLICATION

• Tunnel smoke exhaust damper intended for public buildings, high rises or type 3E and type 4 residential buildings. Generally installed in suspended ceilings, the PLAFONE tunnel damper is connected to ductwork that ends in a static blade grille for type AO or AU slabs.

• Smoke exhaust dampers are normally closed and only open in the event of a fire, on electrical command from the Fire safety control system.

QUALIFICATION

• CE-marking compliant as per EN 12101-8: No. 1812-CPD-1054.

• Fire resistance rating according to EN 1366-10 test: EI 120 (ved-i o) S - 1500 Pa - AA multi-compartment, compliant with § 2.4 of EN 13501-4. Qualified on Promatect L500 smoke exhaust duct and on EN 1366-9-compliant ducts made of the same material and with the same density.

• Compliant with NF-S-61937-10.

• Leakage rate: the PLAFONE damper presents an extremely low leakage rate: at 1500 Pa, the leak is 3/h par m de lame.3/h per metre of blade.

DIMENSIONS (MM)

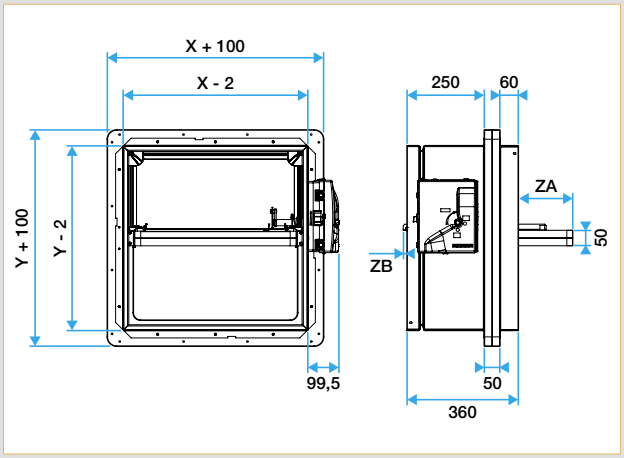

X and Y correspond to the installation dimensions in the duct.

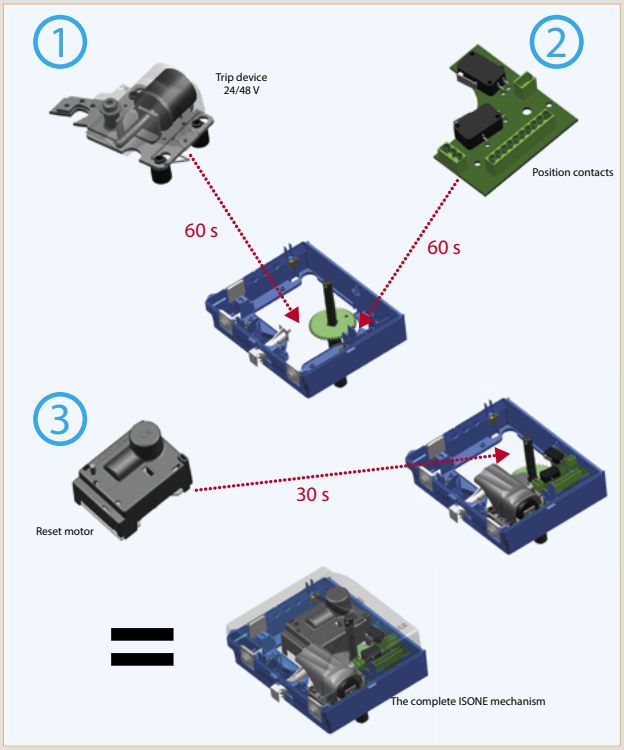

Fire Protection

Installation of PLAFONE tunnel damper

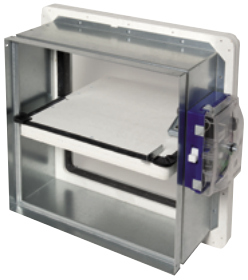

ADVANTAGES

Minimal leakage rate.
Validated for remote installation on PROMAT duct.
Upgradable ISONE mechanism.
Wide range of approved duct.

COMPLIANCE(S)

- *Compliant with CE marking as per EN 12101-8: 812-CPD-1054.*
- *EI 120 (ved-i o) S -1500 Pa - AA multi.*
- *Certified NF and compliant with NF-S-61937-10.*

INSTALLATION

For which installation?

- Qualified on a Promatect L500 smoke exhaust duct and on ducts compliant with EN 1366-8 and -9, made of the same material and with the same density.
- Multi-compartment smoke exhaust dampers can be used for single-compartment applications.
- The fire rating stipulates the service pressure: the damper must not be subjected to pressure losses > -1500 Pa.
- Fire direction: like all smoke exhaust dampers, respect fire inside the smoke exhaust duct.

How?

- The nominal damper dimensions X and Y correspond to the interior dimensions of the duct.
- The PLAFONE tunnel damper is equipped with a short 60 mm sleeve that must be embedded in the duct air stream.
- Fastening in the duct is done in the usual way for installation in ducts, using screws or adhesive mortar.

PRINCIPLE OF INSTALLATION

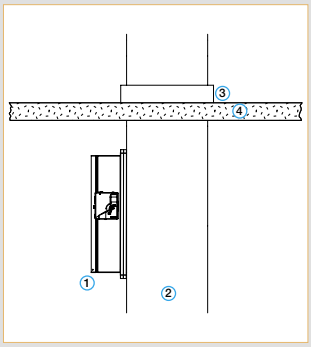

Attachment to vertical wall of smoke exhaust duct.

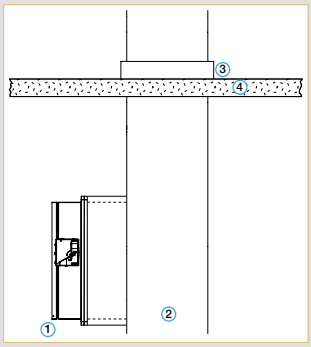

Attachment to horizontal side flue of smoke exhaust duct.

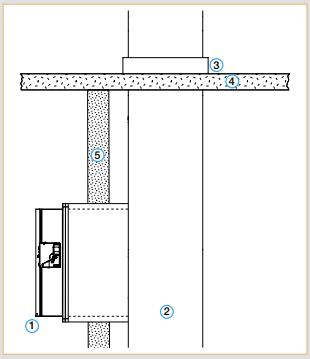

Same as previous installation with partition - 5

1. PLAFONE tunnel damper, screwed and sealed.Smoke exhaust duct compliant with EN 1366-8 and/or -9.
2. Recommended for slab penetrations (depending on type of duct).
3. Slab.
4. Partition around duct (not involved in fire rating).

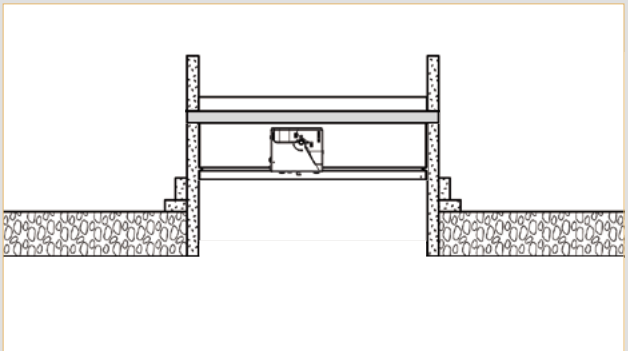

Offset mounting

PLAFONE tunnel damper

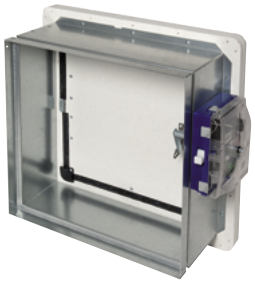

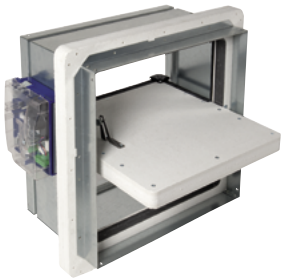

ADVANTAGES

- *Minimal leakage rate.*
- *Validated for remote installation.*
- *Upgradable ISONE mechanism.*
- *Wide range of approved duct.*

COMPLIANCE(S)

- *Compliant with CE marking as per EN 12101-8: 812-CPD-1054.*
- *EI 120 (ved-i o) S -1500 Pa - AA multi.*
- *Certified NF and compliant with NF-S-61937-10.*

RANGE

Designation	Reference
RANGE with choice of options	
PLAFONE tunnel damper	11041111

AVAILABLE CHOICE OF OPTIONS

Identical to ISONE fire dampers except for the fuse which is forbidden on smoke exhaust damper

Designation	Code
24V option	
VDS24+FCU1	43304
VDS24+FCU1+DCU1	43305
VDS48+FCU1	43306
VDS48+FCU1+DCU1	43307
VM24+FCU1	43308
VM24+FCU1+DCU1	43309
VM48+FCU1	43310
VM48+FCU1+DCU1	43311
VDS24+FCU1+EHOP30S	43312
VDS24+FCU1+DCU1+EHOP30S	43313
48V option	
VDS48+FCU1+EHOP30S	43314
VDS48+FCU1+DCU1+EHOP30S	43315
VM24+FCU1+EHOP30S	43316
VM24+FCU1+DCU1+EHOP30S	43317
VM48+FCU1+EHOP30S	43318
VM48+FCU1+DCU1+EHOP30S	43319
Additional contacts	
FCU2+DCU2	43320

- FCU : open position contact
- DCU : closed position contact
- VDS : «Power emission» electromagnetic trip device
- VM : «Power cut-off» electromagnetic trip device

PLAFONE tunnel damper

PLAFONE with GFE 007 grille

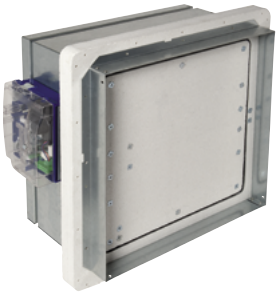

PLAFONE closed in standby position

ADVANTAGES

- *Minimal leakage rate.*
- *Validated for remote installation on PROMAT duct.*
- *Upgradable ISONE mechanism.*
- *Wide range of approved duct.*

COMPLIANCE(S)

- *Compliant with CE marking as per EN 12101-8: 812-CPD-1054.*
- *EI 120 (ved-i o) S -1500 Pa - AA multi.*
- *Certified NF and compliant with NF-S-61937-10.*

ACCESSORIES

Designation	Reference	Discount family
GFE 007 grille slim frame	11045337	***15***
Ferrule for circular connections		
PLAFONE Ferrule D160	11041050	***15***
PLAFONE Ferrule D200	11041051	***15***
PLAFONE Ferrule D250	11041052	***15***
PLAFONE Ferrule D315	11041053	***15***
PLAFONE Ferrule D355	11041054	***15***
PLAFONE Ferrule D400	11041055	***15***
PLAFONE Ferrule D450	11041056	***15***
PLAFONE Ferrule D500	11041057	***15***
PLAFONE Ferrule D560	11041058	***15***
PLAFONE Ferrule D630	11041059	***15***
PLAFONE Ferrule D710	11041060	***15***
PLAFONE Ferrule D800	11041061	***15***
PLAFONE Ferrule D900	11041062	***15***

If Plafone Y > 500 mm : offset is necessary or junction by duct

SIZE RANGES AND FREE AIR PASSAGES (DM²)

	Width X																										
Height Y	**200**	**250**	**300**	**350**	**400**	**450**	**500**	**550**	**600**	**650**	**700**	**750**	**800**	**850**	**900**	**950**	**1000**	**1050**	**1100**	**1150**	**1200**	**1250**	**1300**	**1350**	**1400**	**1450**	**1500**
200	1,5	1,9	2,4	2,9	3,4	3,9	4,4	4,9	5,4	5,9	6,4	6,8	7,3	7,8	8,3	8,8	9,3	-	-	-	-	-	-	-	-	-	-
250	2,2	2,9	3,7	4,4	5,2	5,9	6,6	7,4	8,1	8,9	9,6	10,3	11,1	11,8	12,6	13,3	14	-	-	-	-	-	-	-	-	-	-
300	2,9	3,9	4,9	5,9	6,9	7,9	8,9	9,9	10,9	11,8	12,8	13,8	14,8	15,8	16,8	17,8	18,8	19,8	20,8	21,7	22,7	23,7	24,7	25,7	26,7	27,7	28,7
350	3,7	4,9	6,2	7,4	8,6	9,9	11,1	12,4	13,6	14,8	16,1	17,3	18,6	19,8	21	22,3	23,5	24,8	26	27,2	28,5	29,7	31	32.2	33.4	34,7	35,9
400	4,4	5,9	7,4	8,9	10,4	11,9	13,4	14,8	16,3	17,8	19,3	20,8	22,3	23,8	25,3	26,8	28,3	29,7	31,2	32,7	34,2	35,7	37,2	38,7	40,2	41,7	43,2
450	4,3	5,9	7,6	9,2	10,9	12,5	14,2	15,8	17,5	19,1	20,8	22,4	24,1	25,7	27,4	29	30,7	32,3	34	35,6	37,3	38,9	40,6	42,2	43,9	45,5	47,2
500	4,9	6,8	8,7	10,6	12,5	14,4	16,3	18,2	20,1	22	23,9	25,8	27,7	29,6	31,5	33,4	35,3	37,2	39,1	41	42,9	44,8	46,7	48,6	50,5	52,4	54,3
550	5,6	7,7	9,9	12	14,2	16,3	18,5	20,6	22,8	24,9	27,1	29,2	31,4	33,5	35,7	37,8	40	42,1	44,3	46,4	48,6	50,7	52,9	55	57,2	59,3	-
600	6,2	8,6	11	13,4	15,8	18,2	20,6	23	25,4	27,8	30,2	32,6	35	37,4	39,8	42,2	44,6	47	49,4	51,8	54,2	56,6	59	61,4	63,8	-	-
650	6,9	9,5	12,2	14,8	17,5	20,1	22,8	25,4	28,1	30,7	33,4	36	38,7	41,3	44	46,6	49,3	51,9	54,6	57,2	59,9	62,5	65,2	67,8	-	-	-
700	7,5	10,4	13,3	16,2	19,1	22	24,9	27,8	30,7	33,6	36,5	39,4	42,3	45,2	48,1	51	53,9	56,8	59,7	62,6	65,5	68,4	71,3	-	-	-	-
750	8,2	11,3	14,5	17,6	20,8	23,9	27,1	30,2	33,4	36,5	39,7	42,8	46	49,1	52,3	55,4	58,6	61,7	64,9	68	71,2	74,3	-	-	-	-	-
800	8,8	12,2	15,6	19	22,4	25,8	29,2	32,6	36	39,4	42,8	46,2	49,6	53	56,4	59,8	63,2	66,6	70	73,4	76,8	-	-	-	-	-	-
850	9,5	13,1	16,8	20,4	24,1	27,7	31,4	35	38,7	42,3	46	49,6	53,3	56,9	60,6	64,2	67,9	71,5	75,2	78,8	-	-	-	-	-	-	-
900	10,1	14	17,9	21,8	25,7	29,6	33,5	37,4	41,3	45,2	49,1	53	56,9	60,8	64,7	68,6	72,5	76,4	80,3	-	-	-	-	-	-	-	-
950	10,8	14,9	19,1	23,2	27,4	31,5	35,7	39,8	44	48,1	52,3	56,4	60,6	64,7	68,9	73	77,2	81,3	-	-	-	-	-	-	-	-	-
1000	11,4	15,8	20,2	24,6	29	33,4	37,8	42,2	46,6	51	55,4	59,8	64,2	68,6	73	77,4	81,8	-	-	-	-	-	-	-	-	-	-

FREE AIR PASSAGES WITH FERRULE FOR CIRCULAR CONNECTION (DM²)

Ø	160	200	250	315	355	400	450	500	560	630	710	800	900
X x Y	265x265	265x265	315x315	365x365	415x415	465x465	515x515	565x565	600x600	670x670	750x750	840x840	940x940
Free air passage	3,5	3,5	5,6	8,2	11,4	15	19,1	23,8	27,3	35,1	45,2	58,2	74,4

GDF guillotine damper, E60 (1 hour flame retardant)

GDF Damper

Mounting frame

GFA Alu grille

COMPLIANCE(S)

- *EN 1634-1: E60*
- *NF-certified.*
- *Air passage compliant with IT 246.*

RANGE

Designation	Reference	Discount family
GDF1/A	11044002	***15***
GDF2/A	11044004	***15***
GDF1/E	11044052	***15***
GFA Alu grille	11045098	***15***
Rear cover GDF 1/A and 2/A	11045553	***15***

DESCRIPTION

- GDF is a guillotine damper, 1-hour flame retardant, normally open.
- Features a metal framework and a body made of refractory material.
- Only tripped by 70 °C thermal fuse.

FIELD OF APPLICATION

- Air transfer damper in smoke exhaust systems.
- Airlock / corridor transfer under solution B for high-rise buildings.
- Principle: the damper automatically closes in the event of temperature rise on the thermal trip device placed in the air stream.

INSTALLATION

- Surface-mounted on wall:GDF 1/A, GDF 2/A.
- Built-in: GDF 1/E.

AVAILABLE OPTIONS

- Signalling equipment
  - -FCU open position contacts
  - -DCU closed position contacts
- Labelling: Label customization is possible (name of the site, floor...).

ACCESSORIES

GFA Aluminium grille

- Description:
  - Surrounding frame that covers the whole damper frame.
  - Horizontal aluminium vanes, 25 mm pitch, crimped on to an aluminium frame.
- GFA options available.

Choice of fastening methods: metric screws or clips. High-resistance epoxy paint, RAL colour of choice.

- Free air passage : 91.34% (CETIAT N°94 01 163 report)

Rear cover GDF 1/A and 2/A

- Galvanised steel cover to protect the damper.

DIMENSIONS - OPENING (MM)

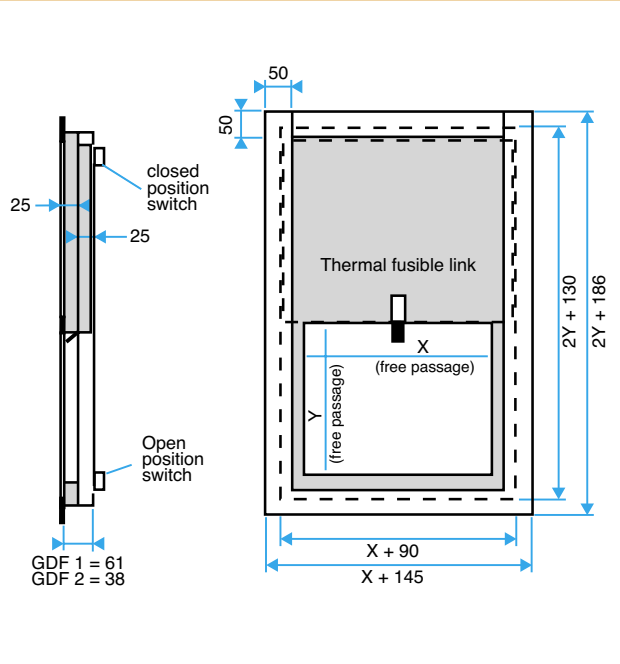

GDF 1 - GDF 2	Width	Height
Reservation with mounting frame	X+130	2Y+170
Overall dimension with GFA Alu grille	X+185	2Y+240

FREE AIR PASSAGE (DM²) - COMPLIANT WITH IT 246

Y	11045098											
	X (mm)											
	250	**300**	**350**	**400**	**450**	**500**	**550**	**600**	**650**	**700**	**750**	**800**
250	5,6	6,9	8,1	9,4	10,6	11,9	13,1	14,4	-	-	-	-
300	6,9	8,4	9,9	11,4	12,9	14,4	15,9	17,4	18,5	20,0	21,5	23,0
350	8,1	9,9	11,6	13,4	15,1	16,9	18,6	20,4	21,8	23,5	25,2	27,0
400	9,4	11,4	13,4	15,4	17,4	19,4	21,4	23,4	25,0	27,0	29,0	31,0
450	10,6	12,9	15,1	17,4	19,6	21,9	24,1	26,4	28,3	30,5	32,7	35,0
500	11,9	14,4	16,9	19,4	21,9	24,4	26,9	29,4	31,5	34,0	36,5	39,0
550	-	15,9	18,6	21,4	24,1	26,9	29,6	32,4	34,8	37,5	40,2	43,0
600	-	17,4	20,4	23,4	26,4	29,4	32,4	35,4	38,0	41,0	44,0	47,0
650	-	-	-	25,2	28,4	31,6	34,8	38,1	41,3	44,5	47,7	51,0
700	-	-	-	27,2	30,6	34,1	37,6	41,1	44,5	48,0	51,5	55,0
750	-	-	-	29,2	32,9	36,6	40,3	44,1	47,8	51,5	55,2	59,0
800	-	-	-	31,2	35,1	39,1	43,1	47,1	51,0	55,0	59,0	63,0

GDF guillotine damper, E60 (1 hour flame retardant)

GDF Damper

Mounting frame

GFA Alu grille

AVAILABLE CHOICE OF OPTIONS FOR DAMPER

Designation	Reference
FCU GDF1-GDF2 position contacts	41148
DCU GDF1-GDF2 position contacts	41137
Fixation by clips GFALU	45021
Other RAL group 1	RAL1
Other RAL group 2	RAL2
Other RAL group 3	RAL4

AVAILABLE CHOICE OF OPTIONS FOR GFA ALU GRILLE

Designation	Reference
Fixation by clips GFALU	45021
Other RAL group 1	RAL1
Other RAL group 2	RAL2
Other RAL group 3	RAL4

OXYTONE PANNEAU air inlet

OXYTONE PANNEAU closed in standby position

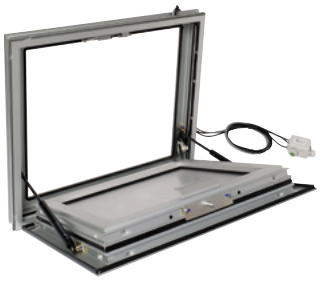

Open in safety position

ADVANTAGES

- *Insulated air inlet.*
- *New: invisible mechanism, integrated in frame.*
- *Ideal for VB air inlets on outside walls.*
- *Choice of RAL paint.*
- *Aesthetic GFAP 007 indoor grille*

COMPLIANCE(S)

- *Certified NF.*
- *Complies with NF-S-61937-8 concerning Air inlets.*
- *Complies with CE marking in accordance with EN 12101-2 (possibility of using OXYTONE PANNEAU for natural smoke evacuation).*

RANGE

Designation	Reference	Discount family
OXYTONE PANNEAU L<1200	11044310	***15***
OXYTONE PANNEAU L>1200	11044309	***15***

• The standard range extends to:
- Width: 420 < W < 1600 mm with step of 5 mm)
- Height: 420 < Height < 1200 mm with step of 5 mm

Beyond widths of 1200 mm the frame is equipped with 2 electromagnetic actuators to ensure the panel closes correctly.

• For other versions, e.g with inward-opening panel: please contact us.

DESCRIPTION

• The panel is outward-opening, using mechanical actuators released by a command via the 24V or 48V remote control.
• Activation by power emission or power cut-off, 24 or 48 VDC.
• The panel is fitted with a handle for manual reset.
• The chassis features a frame in which 2 actuators articulate the panel. In addition to the actuators, the position contacts and the electric trip device are built into the frame and therefore invisible when the OXYTONE PANNEAU panel is closed.
• The frame and the panel use aluminium surrounds to ensure seamless integration into all types of window frames, both on reveals and wall mounted.
• The panel is available with 3 different versions:
- standard = double glazing (hardened and laminated outside glass 4/10/33.2),
- optional thermal double glazing (Argon-filled 4/16/4 Climaplus),
- optional insulated solid metal panel option (2 aluminium sheets 20/10 + 20 mm polystyrene)
• RAL paint is possible as an option on chassis and the solid panel.
• Supplied without seal covers, available as accessories (not fitted), to be cut to size.

FIELD OF APPLICATION

• OXYTONE PANNEAU is a remote-controlled air inlet, opening outwards and used exclusively for air inlet applications. These air inlets are designed for natural and mechanical smoke exhaust systems in commercial buildings and multi-family housing.
• OXYTONE PANNEAU particularly meets the needs of modern buildings, where heat losses must be minimal.
• Principle of operation: closed in standby position, OXYTONE PANNEAU opens outwards by an electrical command in the event of a fire, providing the fresh air necessary for smoke exhaust operations.
• Indoors, the installation of a GFAP 007 or a GFAP grille offers the possibility of a homogeneous aesthetic design with OPTONE smoke exhaust damper grilles.
• It is also possible to install OXYTONE PANNEAU in a curtain wall.
• OXYTONE PANNEAU is also qualified for natural smoke extraction.

DIMENSIONS (MM)

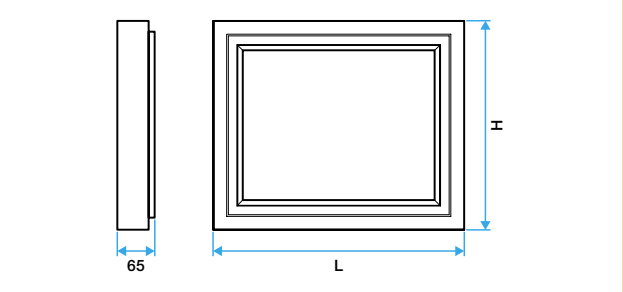

	Width L												
H	**420**	**500**	**600**	**700**	**800**	**900**	**1000**	**1100**	**1200**	**1300**	**1400**	**1500**	**1600**
420	9	10.6	13.4	16.2	19	21.8	24.6	27.4	30.2	33	35.8	38.6	41.4
500	10.6	14.4	18.2	22	25.8	29.6	33.4	37.2	41	44.8	48.6	52.4	56.2
600	13.4	18.2	23	27.8	32.6	37.4	42.2	47	51.8	56.6	61.4	66.2	71
700	16.2	22	27.8	33.6	39.4	45.2	51	56.8	62.6	68.4	74.2	80	85.8
800	19	25.8	32.6	39.4	46.2	53	59.8	66.6	73.4	80.2	87	93.8	100.6
900	21.8	29.6	37.4	45.2	53	60.8	68.6	76.4	84.2	92	99.8	107.6	115.4
1000	24.6	33.4	42.2	51	59.8	68.6	77.4	86.2	95	103.8	112.6	121.4	130.2
1100	27.4	37.2	47	56.8	66.6	76.4	86.2	96	105.8	115.6	125.4	134.2	145
1200	30.2	41	51.8	62.6	73.4	84.2	95	105.8	116.6	127.4	138.2	149	159.8

AIR PASSAGE (DM²)

• The nominal dimensions W x H correspond to overall dimensions.
• Opening dimensions = W x H + clearance required for mounting.
• Air passage = (W-120) x (H-120) mm.

INSULATION COEFFICIENT UW

• The thermal transmission coefficient to be taken into account for wall insulation calculations depends on the panel dimensions. A small panel offers a higher Uw than a large panel (impact of frame in relation to panel area).
• The aluminium surrounds used for the frame and panel are thermal break surrounds.
• The OXYTONE PANNEAU range of panels is available with 3 different versions:
- standard = double glazing
(hardened and laminated outside glass 4/10/33.2), - Ug = 3.03 W/m².k)
Uw = 3.8 for 420 x 420 mm to 3.3 W/m².K for 1600 x 1200 mm.
- optional thermal double glazing
(Argon 4/16/4 climaplus - Ug = 1.1 W/m².K)
Uw = 3.3 for 420 x 420 mm to 2 W/m².K for 1600 x 1200 mm.
- optional solid insulated panel
(2 x aluminium sheet 20/10 + 20 mm polystyrene - Ug = 1.49 W/m².K)
Uw = 3.1 for 420 x 420 mm to 2.1 W/m².K for 1600 x 1200 mm.

OXYTONE PANNEAU air inlet

Actuators and contacts built into frame

Trip device integrated into surround.

INSTALLATION

• On outside wall, with an angle between 0 and 5° to the vertical.
• The structure must be able to bear the whole weight of the panel and hinges when it is fully opened.
• In a masonry wall, the panel and frame are installed on reveals as per the diagram and in respect of the DTU directives concerned:
- Ensure the support is flat,
- Ensure the frame is correctly aligned,
- Number of vertical anchor points:
• H<= 650 mm <-> 1 central attachment,
• H > 650 mm <-> 2 attachments at 250 mm from the top and the bottom.
• The air inlet can also be installed in a curtain wall (glazed façade).
In this case the unit is anchored using the tightening system specific to the curtain wall structure. Please consult us.

ACCESSORIES

• GFAP 007 indoor grille.
If the air inlet is installed in a masonry wall, a GFAP 007 indoor grille offers an aesthetic finish for the smoke exhaust damper. The GFAP 007 blade core is easily removed using the 007 clips. Selection of GFAP 007 grille:
- X dimension of GFAP 007 = W- 50 mm
- Y dimension of GFAP 007 = H - 50 mm rounded up to nearest 25 mm.
The inlet is surface-mounted on the wall. For more information on the GFAP 007 grille, see previous pages.

• Mounting accessories
- 20 mm seal cover, price per linear metre, useful if the OXYTONE PANNEAU is installed flush with the wall.
- 78 x 20 mm sealing flap, price per linear metre, used to dress the lip.
- 3 anchoring kits for wood (8 screws), metal (8 screws) or concrete (8 screws + plugs).
- Adaptation for installation on a curtain wall: please consult us. - Adaptation possible to connect two OXYTONE PANNEAU air inlets together: please consult us.

Designation	Reference	Discount family
GFAP 007 (partition without mounting-frame)	11045335	***15***
Strip 780 x 22 mm	11044323	***15***
20 mm seal cover	11044324	***15***
Wood anchoring kit	11044326	***80***
Metal anchoring kit	11044327	***80***
Concrete anchoring kit	11044328	***80***
FCU or DCU contact kit	11044325	***80***

AVAILABLE CHOICE OF OPTIONS

Designation	Code
FCU + DCU open and closed position contacts	44315
FCU2 + DCU2 open and closed position contacts	44316
GLAZED PANEL 4/10/33.2	44317
CLIMAPLUS GLAZED PANEL 4/16Ar/4	44318
RAL paint for GLAZED PANEL	44319
Insulated sheet SOLID PANEL	44320
RAL paint for insulated sheet SOLID PANEL	44321

OXYTONE PANNEAU product code 11044310 includes the current-emission or current-break remote control in 24 V and 48 V versions. Specify these information with the order.11144309 product code includes 2 actuators.

PRINCIPLE OF INSTALLATION IN MASONRY WALL

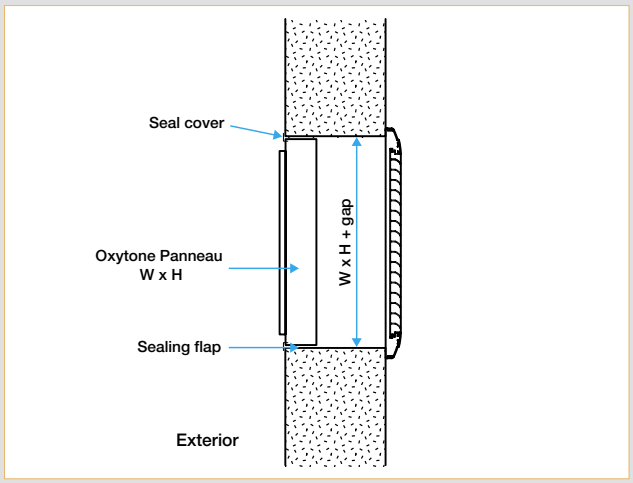

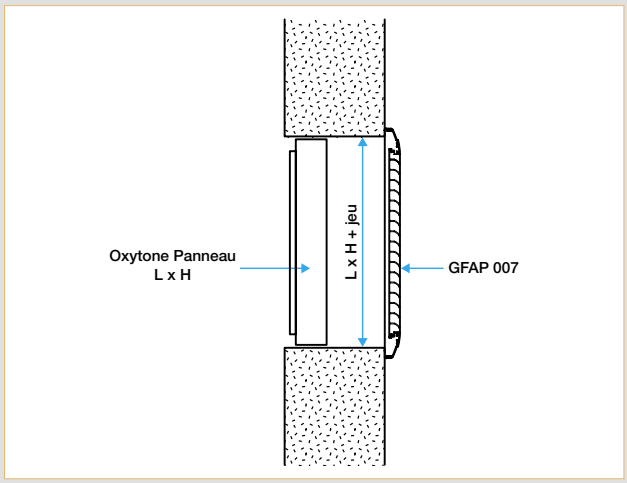

AIRONE air inlet

AIRONE closed in standby position

Open in safety position

ADVANTAGES

- *Refined and elegant aesthetics.*
- *Thermal insulation as standard.*
- *Aesthetic GFAP 007 indoor grille - Identical to that used on the smoke exhaust damper.*
- *Ideal for VB air inlets on outside walls.*
- *Choice of RAL colour.*

COMPLIANCE(S)

- *NF-S-61937-8 «Air inlets».*
- *IT246 (air passage)*

RANGE (WITH CHOICE OF OPTIONS)

Designation	Reference	Discount family
AIRONE	11044370	***15***

- The standard range extends to:
- Width: 475 ≤ L ≤ 1350 mm with a step of 5 mm
- Height: 475 ≤ H ≤ 1350 mm with a step of 5 mm

DESCRIPTION

- Opening: panel opens outwards, using intrinsic energy (2 actuators) subsequent to a command from the 24 V or 48 V remote control.
- Activation by power emission or power cut-off, 24 or 48 VDC.
- Reset: manual, panel equipped with handle.
- Frame: aluminium sections for seamless integration in all types of framework, especially surface-mounted.
- Panel: insulated aluminium sheet (metal/polystyrene/metal sandwich)
- RAL paint possible as option (standard finish: anodised aluminium)
- Start and end position limit signal contacts: available as optional extras, may be doubled up.

FIELD OF APPLICATION

- AIRONE is a remote-controlled air inlet, opening outwards and used for air inlet applications. These air inlets are designed for natural and mechanical smoke exhaust systems in commercial buildings and multi-family housing.
- AIRONE particularly meets the needs of modern buildings, where heat losses must be minimal.
- Principle of operation: closed in standby position, AIRONE opens outwards by an electrical command in the event of a fire, providing the fresh air necessary for smoke exhaust operations.
- Indoors, the installation of a GFAP 007 grille offers the possibility of a homogeneous aesthetic design with OPTONE smoke exhaust damper grilles.

DIMENSIONS (MM)

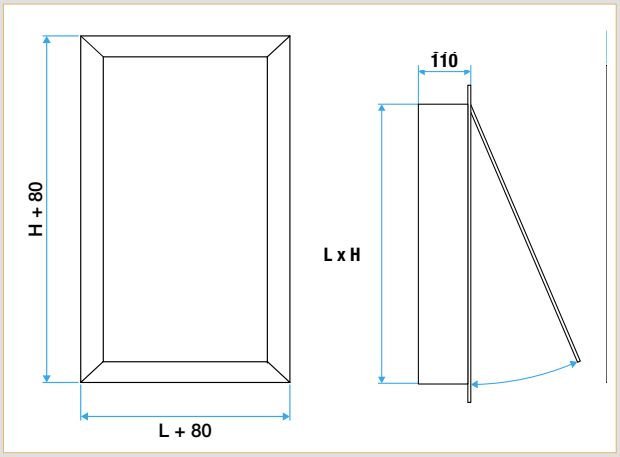

FREE AIR PASSAGE (DM²)

- The nominal dimensions W x H correspond to the dimensions of the neck.
- Opening size = W x H + clearance required for mounting (+5 mm without mounting frame).
- Free air passage (dm²) = (W-59) x (H-59)/10000 - C where:
  C = 4.5 where H = 475
  C = 4.83 where 600 ≤ H ≤ 850
  C = 5.88 where H > 850

H	Width L (mm)							
	475	**600**	**725**	**850**	**975**	**1100**	**1225**	**1350**
475	12.8	18	23.2	28.4	33.6	38.8	44	49.2
600	17.7	24.4	31.2	38	44.7	51.5	58.2	65
725	22.9	31.2	39.5	47.8	56.2	64.5	72.8	81.1
850	28.1	38	47.8	57.7	67.6	77.5	87.4	97.3
975	32.2	43.7	55.1	66.6	78	89.5	100.9	112.4
1100	37.4	50.4	63.4	76.5	89.5	102.5	115.5	128.5
1225	42.6	57.2	71.8	86.4	100.9	115.5	130.1	-
1350	47.8	64	80.1	96.2	112.4	128.5	144.6	-

INSULATION COEFFICIENT UW

- The thermal transmission coefficient to be taken into account for wall insulation calculations depends on the panel dimensions. A small panel offers a higher Uw than a large panel (impact of frame in relation to panel area).

H	Width L (mm)							
	475	**600**	**725**	**850**	**975**	**1100**	**1225**	**1350**
475	3.2	3.03	2.94	2.87	2.82	2.78	2.75	2.72
600	3.05	2.89	2.79	2.72	2.67	2.63	2.6	2.57
725	2.96	2.8	2.7	2.63	2.57	2.53	2.5	2.47
850	2.9	2.74	2.63	2.56	2.51	2.46	2.43	2.4
975	2.85	2.69	2.58	2.51	2.46	2.41	2.38	2.35
1100	2.81	2.65	2.55	2.47	2.42	2.37	2.34	2.31
1225	2.79	2.62	2.52	2.44	2.39	2.34	2.31	-
1350	2.76	2.6	2.49	2.42	2.36	2.32	2.28	-

AIRONE air inlet

Closed, interior view

INSTALLATION

• On outside wall, with an angle between 0 and 30° to the vertical.
• In a masonry wall, the panel and frame are installed on reveals as per the diagram and in respect of the DTU directives concerned:
- Ensure the support is flat,
- ensure the frame is square,
- number of vertical fastening points:
• H < = 650 mm 1 central attachment,
• H > 650 mm 2 attachments at 250 mm from top and bottom,
• The air inlet can also be installed in a curtain wall (glazed façade).
In this case the unit is anchored using the tightening system specific to the curtain wall structure. Please consult us.

ACCESSORIES

The AIRONE 11044370 code includes an electromagnetic actuator by power emission or power cut-off, 24 or 48 VDC to specify when you place the order.

Designation	Reference	Discount family
Mounting frame OXYTONE LAMES	11044345	***15***
Door installation kit - OXYTONE LAMES	11044353	***80***
GFAP 007 (partition without mounting-frame)	11045335	***15***
Wood anchoring kit	11044326	***80***
Metal anchoring kit	11044327	***80***
Concrete anchoring kit	11044328	***80***
AIRONE FCU + DCU kit	11044379	***80***

• **Mounting frame:** recommended to facilitate installation in a concrete wall. Made of galvanised steel and sealed in place using the deformable tabs or tightly screwed. Delivered in kit form with assembly instructions.
• **GFAP 007 indoor grille:** When installed in a masonry wall, a GFAP 007 indoor grille offers a decorative finish for the smoke exhaust damper. The GFAP 007 blade core is easily removed using the 007 clips. Selection of GFAP 007 grille:
- X dimension of GFAP 007 = W opening - 50 mm
- Y dimension of GFAP 007 = H opening - 50 mm (rounded up to closest 25 mm).
The inlet is surface-mounted on the wall. For more information on the GFAP 007 grille, see relevant page.
• 3 mounting kits for wood (8 screws), metal (8 screws) or concrete (8 screws + plugs).
• Adapter kit for door mounting.

AVAILABLE CHOICE OF OPTIONS

Designation	Code
FCU1+DCU1	44375
FCU2+DCU2	44376
RAL AIRONE	44377

PRINCIPLE OF INSTALLATION IN MASONRY WALL

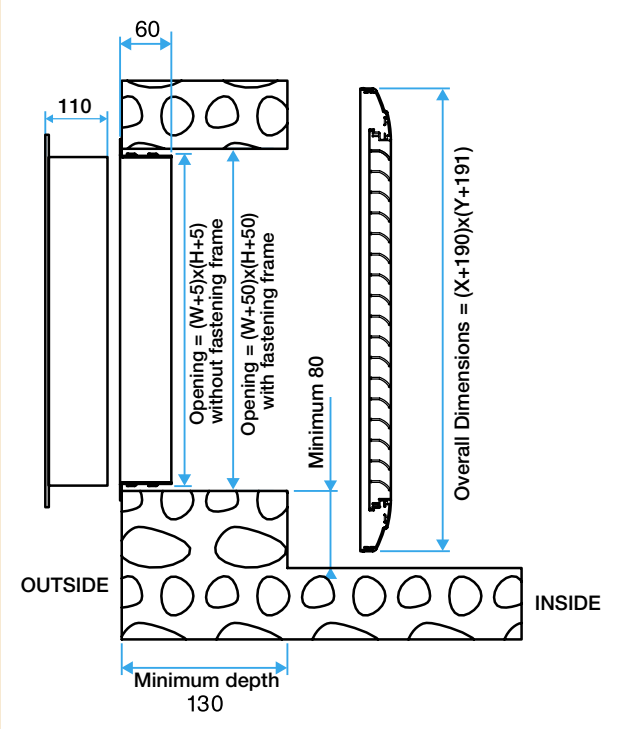

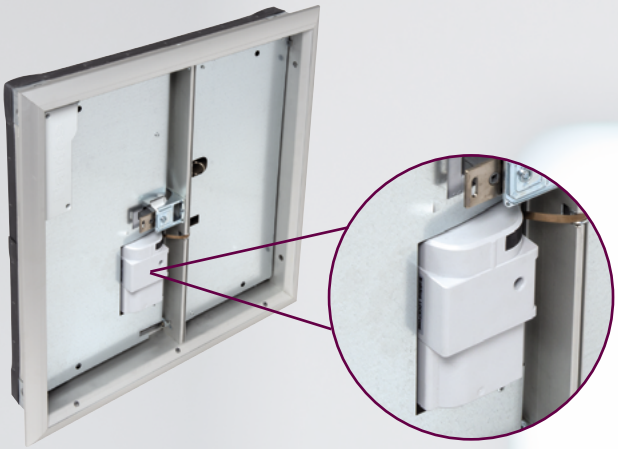

LOCKTONE

The motorization solution to facilitate the verification of dampers.

The smoke extraction damper is a safety device that must be operational 100% of the time.
To facilitate control operations of the smoke extraction system, Aldes offers the LOCKTONE actuator over its entire range of OPTONE dampers, whether they have 1 or 2 flaps. Assembly at the factory, or after installation on site, LOCKTONE does not reduce the section of passage because it is fixed on a flap.

Crédit photos : Getty Images - 2015

#HealthyLiving

aldes

OXYTONE LAMES air inlet with vanes

OXYTONE LAMES closed in standby position

OXYTONE LAMES open in safety position

ADVANTAGES

- *Motorised reset.*
- *Outdoor opening.*
- *GFA 007 indoor grille with removable core.*
- *Insulated version.*
- *Door installation kit.*
- *Wide range of dimensions.*

COMPLIANCE(S)

- *Compliant with french Standard NF-S 61937-8.*
- *Air passage conforms to IT 246.*
- *CE marking (as per EN 12101-2) does not concern air inlet openings.*

RANGE WITH CHOICE OF OPTIONS

Designation	Reference
MOUNTING FRAME OXYTONE LAMES	11044345
OXYTONE LAMES INSULATED	11044343
OXYTONE LAMES	11044342

OXYTONE LAMES codes include the current-emission or current-break remote control in 24 V and 48 V versions. Specify the voltage and the release mode with the order.

FIELD OF APPLICATION

- Remote-controlled air inlet mounted on outside wall.
- Designed for natural and mechanical smoke exhaust systems in commercial buildings and multi-family residential housing.
- On indoor walls, the installation of a GFAP 007 grille offers a decorative finish which matches OPTONE CLASSIC damper exhaust grilles.

DESCRIPTION

- Mechanical blanking device featuring an aluminium frame (natural anodised finish) in which the horizontal blades are pivoted. The blades have the same finish as the frame. When closed, the blades cover the frame for a better seal.
- INSULATED version: the blades are lined with 23 mm of M1 expanded polystyrene (K = 1,55 W/m /°C) enclosed within a PVC box.
- The spring-loaded rod activation mechanism is located behind the blades. Electrical wiring is done through a connection box.
- OXYTONE LAMES is equipped with a current-emission (3.5W) or current-break (1.6W) remote control in 24 V and 48 V versions.
- Manual reset (standard) or 24 V motorised reset (optional factory-mounted or installation on site).
- Optional start and end limit position contacts available. Possibility of doubling-up.

INSTALLATION

- The blades must remain horizontal.
- Intended for installation on an outside wall, OXYTONE LAMES is installed on a metal or concrete wall (the mounting frame is recommended in this case).
- Possible to install OXYTONE LAMES on doors using an adapter kit.

DIMENSIONS (MM)

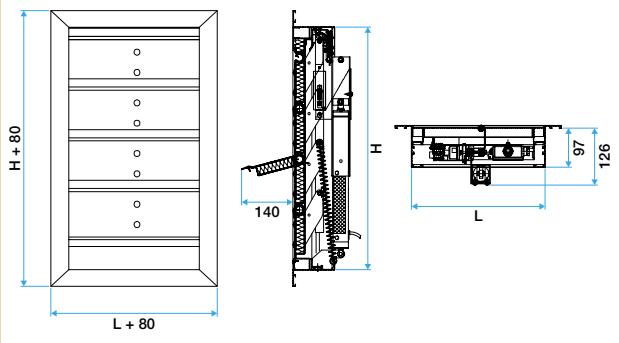

- Nominal dimensions: W x H
- Recess dimensions with sealed mounting-frame: (W+50) x (H+50).
- Recess dimensions without mounting-frame: (W+5) x (H+5)

DIMENSIONS WITH GFAP 007 GRILLE (MM)

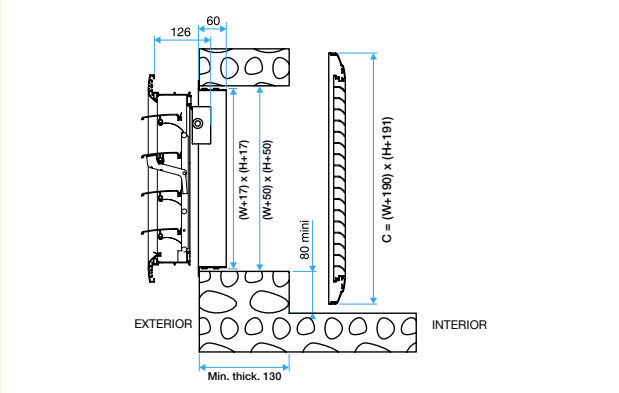

- Nominal dimensions GFAP 007: X x Y.
- Selection with mounting-frame: X = W,
  Y = H.
- Selection without mounting-frame: X = W - 45 mm,
  Y = H - 45 mm.

Ensure that X and Y are multiples of 25 mm.

GFAP 007 grille

OXYTONE LAMES air inlet with vanes

OXYTONE LAMES closed in standby position

OXYTONE LAMES open in safety position

ACCESSORIES

Designation	Reference	Discount family
Kit of additional FCU & DCU contacts	11044346	***80***
Motor kit - 24V OXYTONE LAMES	11044354	***80***
PSU unit - 1 x 24V motor - OXYTONE LAMES	11044349	***80***
PSU unit - 2 x 24V motor - OXYTONE LAMES	11044350	***80***
PSU unit - 4 x 24V motor - OXYTONE LAMES	11044351	***80***
PSU unit - 8 x 24V motor - OXYTONE LAMES	11044353	***80***
Door installation kit - OXYTONE LAMES	11044348	***80***

• The mounting frame for OXYTONE LAMES is recommended when installing OXYTONE units on concrete walls. 20/10ths galvanised steel. Sealed in place using deformable tabs or screwed. Delivered in kit form with assembly instructions.
Mounting frame product code: 11044345.
• GFAP 007 decorative indoor grille on wall. When installed in a masonry wall, a GFAP 007 indoor grille offers a decorative finish for the smoke exhaust damper. The vane core is easily removed using the 007 clips.
Selection of GFAP 007 grille:
- X of GFAP 007 = L opening - 50 mm
- Y of GFAP 007 = H opening - 50 mm rounded up to next pitch of 25 mm.
Surface-mounted on wall. For more information on the GFAP 007, see previous pages.

AVAILABLE CHOICE OF OPTIONS

OXYTONE can be fitted with signalling contacts. Delivered fitted, these contacts must be ordered with the air inlet.

Designation	Reference
Open and closed position contacts DCU1 + FCU1	44335
Open and closed position contacts DCU2 + FCU2	44336
Factory-mounted motorised reset (24V actuator)	44337
OXYTONE LAMES INSULATED RAL paint	44341
OXYTONE LAMES RAL paint	44338

OXYTONE LAMES air inlet with vanes

RANGES AND FREE AIR PASSAGE (DM²)

Optional motorised reset

It is possible to order OXYTONE LAMES with an electrical reset mechanism to facilitate maintenance and testing. The system includes an electrically-operated cylinder to close the fins, it can only be fitted to products where the height ≥ H 600 mm (minimum 4 fins).

OXYTONE LAMES (MANUAL RESET)

Height H (mm)	No. of vanes	Width (mm)									Discount family
		330	**475**	**600**	**725**	**850**	**975**	**1100**	**1225**	**1350**	***15***
350	**2**	-	8,14	11,06	13,99	16,92	19,85	22,78	25,71	28,64	***15***
475	**3**	-	12,68	17,01	21,34	25,67	29,99	34,32	38,65	42,98	***15***
600	**4**	10,59	17,23	22,96	28,68	34,41	40,14	45,86	51,59	57,32	***15***
725	**5**	13,52	21,78	28,91	36,03	43,16	50,28	57,41	64,53	71,66	***15***
850	**6**	16,44	26,33	34,85	43,38	51,90	60,42	68,95	77,47	86,00	***15***
975	**7**	19,37	30,88	40,80	50,72	60,65	70,57	80,49	90,41	100,34	***15***
1100	**8**	22,29	35,43	46,75	58,07	69,39	80,71	92,03	103,35	114,68	***15***
1125	**9**	25,22	39,98	52,70	65,42	78,14	90,86	103,58	116,30	-	***15***
1350	**10**	28,15	44,52	58,64	72,76	86,88	101,00	155,12	129,34	-	***15***

OXYTONE LAMES INSULATED (MANUAL RESET)

Height H (mm)	No. of vanes	Width (mm)									Discount family
		330	**475**	**600**	**725**	**850**	**975**	**1100**	**1225**	**1350**	***15***
350	**2**	-	6,57	9	11,43	13,86	16,29	18,72	21,15	23,58	***15***
475	**3**	-	10,46	14,08	17,71	21,34	24,96	28,59	32,21	35,84	***15***
600	**4**	8,76	14,35	19,17	23,99	28,81	33,63	38,45	43,27	48,09	***15***
725	**5**	11,26	18,24	24,25	30,27	36,28	42,30	48,32	54,33	60,35	***15***
850	**6**	13,76	22,13	29,34	36,55	43,76	50,97	58,18	65,39	72,60	***15***
975	**7**	16,26	26,01	34,42	42,83	51,23	59,64	68,04	76,45	84,86	***15***
1100	**8**	18,77	29,90	39,50	49,11	58,71	68,31	77,91	87,51	97,11	***15***
1225	**9**	21,27	33,79	44,59	55,38	66,18	76,98	87,77	98,57	-	***15***
1350	**10**	23,77	37,68	49,67	61,66	73,65	85,65	96,64	109,63	-	***15***

OXYTONE LAMES (MOTORISED RESET)

Height H (mm)	No. of vanes	Width (mm)									Discount family
		330	**475**	**600**	**725**	**850**	**975**	**1100**	**1225**	**1350**	***15***
330	2	-	-	-	-	-	-	-	-	-	***15***
475	3	-	-	-	-	-	-	-	-	-	***15***
600	4	9	15,64	21,37	27,09	32,82	38,55	44,27	50,00	55,73	***15***
725	5	11,93	20,19	27,32	34,44	41,57	48,69	55,82	62,94	70,07	***15***
850	6	16,44	24,74	33,26	41,79	50,31	58,83	67,36	75,88	84,40	***15***
975	7	19,37	29,29	39,21	49,13	59,05	68,98	78,90	88,82	98,74	***15***
1100	8	22,29	33,84	45,16	56,48	67,80	79,12	90,44	101,76	113,08	***15***
1225	9	25,22	38,38	51,10	63,82	76,54	89,26	101,98	114,70	-	***15***
1350	10	28,15	42,93	57,05	71,17	85,29	99,41	113,53	127,65	-	***15***

OXYTONE LAMES INSULATED (MOTORISED RESET)

Height H (mm)	No. of vanes	Width (mm)									Discount family
		330	**475**	**600**	**725**	**850**	**975**	**1100**	**1125**	**1350**	***15***
350	2	-	-	-	-	-	-	-	-	-	***15***
475	3	-	-	-	-	-	-	-	-	-	***15***
600	4	7,07	12,66	17,48	22,30	27,12	31,94	36,76	41,58	46,60	***15***
725	5	9,57	16,55	22,56	28,58	34,60	40,61	46,63	52,64	58,66	***15***
850	6	12,07	20,44	27,65	34,86	42,07	49,28	56,49	63,70	70,91	***15***
975	7	14,58	24,33	32,73	41,14	49,54	57,95	66,36	74,76	83,17	***15***
1100	8	17,08	28,22	37,82	47,42	57,02	66,62	77,22	85,82	95,42	***15***
1225	9	19,58	32,10	42,90	53,70	64,49	75,29	86,08	96,88	-	***15***
1350	10	22,08	35,99	47,98	59,98	71,97	83,96	95,95	107,94	-	***15***

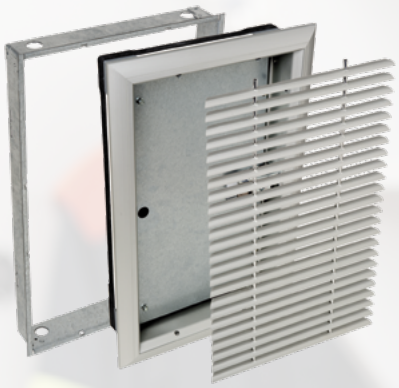

OPTONE.H

Security solution for residential.

Nothing is more important than feeling safe at home. Essential element of the smoke extraction system of residential buildings, OPTONE.H is easy to select and install: a single size of mounting frame and damper.
OPTONE.H is protected by a robust grille, and its steel cover trim prevents access to electrical parts: it is thus suitable for a consumer environment.
OPTONE.H is discreet and elegant with its anodized aluminum frame and grille. A colored finish of your choice can be applied (OPTONE H «Classic»).

Crédit photos : Getty Images - 2015

#HealthyLiving

aldes

Presentation of smoke exhaust ranges for multi-family housing

ORDONE panel

Roof fan with VELONE S.O.S.

OPTONE-H damper

PRINCIPLE OF RESIDENTIAL SMOKE EXTRACTION

• Smoke exhaust from horizontal passageways is required in type 3B and type 4 multi-family housing buildings.
• A residential smoke exhaust system comprises :
- air inlet ducts and smoke exhaust ducts,
- smoke exhaust dampers, closed in standby position, installed on these ducts (VB for air inlets and VH for smoke exhaust) and which open on the storey affected in the event of fire, to enable evacuation of the smoke outside,
- automatic optical detectors and manual activation devices that relay information to the smoke exhaust control panel,
- a smoke exhaust fan in the event of mechanical smoke exhaust and its VELONE S.O.S. roof fan.

PRINCIPLE OF OPERATING OF THE SENSOR OF THE SMOKE EXHAUST DAMPER

• Under normal operation, each storey unit monitors the state of the manual activation device loop and the smoke detector loop. These states are transmitted to the control panel via the remote control line.
• If an alarm is detected, the storey unit transmits the information to the control panel, which manages the visual and audible alarms, while permitting the BEA to control the electromagnetic locks on the dampers of the storey affected.
• Each BEA storey unit can support a current draw from:
- max. 10 detectors,
- max. 10 activation devices,
- max. 3 x 3.5 W dampers.
If there are more than 3 dampers for 1 BEA, additional power supply will be needed.
• MDR modules used to connect smoke exhaust dampers to BEA storey units serve to avoid any risk of inversion of polarity when inserting the diodes. These modules are pre-wired with a built-in diode. Black MDR modules are intermediaries, red MDR modules at the end of the lines are for attachment to the last damper on each storey.

B.C.E. unit
• Used to automatically manage natural air outlets in the event the smoke exhaust cabinet fan fails.

B.N.S. unit
• Controls the non-stop elevator recommended for type 4 buildings.

LAYOUT DIAGRAM FOR RESIDENTIAL SMOKE EXTRACTION

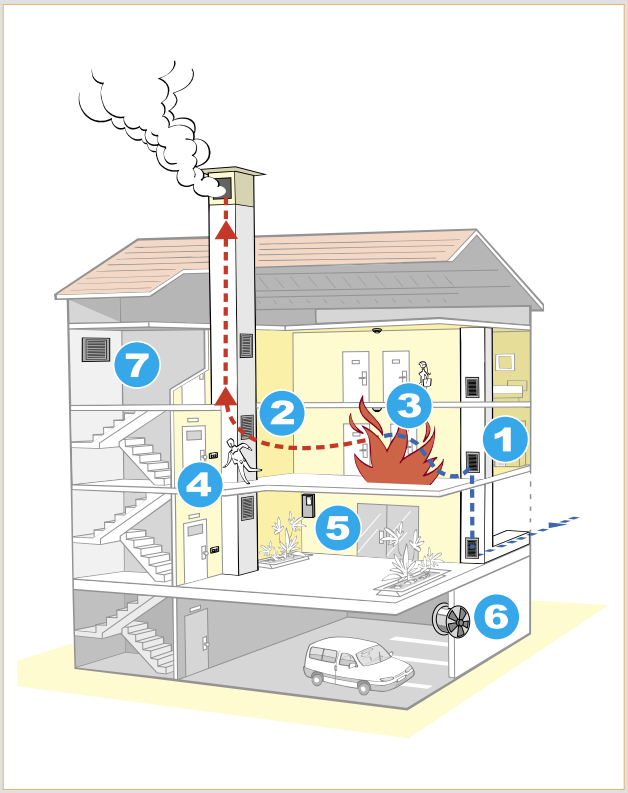

❶ VB (down) air inlet damper: OPTONE.H
❷ VH (up) smoke evacuation damper: OPTONE.H
❸ Smoke detector
❹ Manual activation device
❺ ORDONE smoke exhaust control panel
❻ HELIONE 200°C / 2-hour cabinet fan
❼ Air inlet

OPTONE-H + Grille: smoke exhaust damper for residential applications

OPTONE.H with grille

OPTONE.H with grille and mounting frame

ADVANTAGES

- *Decorative and vandal-proof metal trim.*
- *Excellent air tightness due to double seal.*
- *Totally unrestricted air passage.*
- *Simplified wiring inlets and outlets.*
- *Decorative grille with removable core.*
- *SIMPLE: Same fire damper for smoke evacuation (VH) as for air intake (VB).*
- *Stock nationally available for short delivery lead times.*
- *Individually box-packaged.*

COMPLIANCE(S)

- *Compliant with CE marking as per EN 12101-8*
- *Free air passage : 20,3 dm²*

RANGE

Designation	Reference	Discount family
OPTONE.H mounting frame +Grille 400 x 650	11044001	***15***
OPTONE-H + Grille 1/1-flap - VDS24 - 400 x 650	11044000	***15***

- The OPTONE.H +Grille damper is in national stock. It is fitted with a power emission actuator, 24 VDS.
- The damper isn't fitted with signalling contacts and can't be fitted with these contacts.
- For a damper fitted with signalling contacts, use the OPTONE damper range. BEWARE: add signalling contacts reduce the free air passage, choose OPTONE 400*700 or 450*650.
- The below price include the damper and its aesthetic grille with removable core.
- For a concrete duct installation, add at least 10 mm of scealing.

For other dimensions, see Optone range.

DESCRIPTION

The OPTONE.H + Grille smoke exhaust damperfeatures a frame supporting the gate. It offers air passage > 20 dm2. The damper is controlled via a 24 V DC remote control, using a current emission command from the smoke exhaust control panel, e.g. ORDONE.

- The decorative frame is made of aluminium and houses the removable core of the vane grille. It is drilled in the upper left corner to enable the passage of wiring. It is fitted with surrounding seals for maximum air tightness.
- The grille features a vane core made of natural anodised aluminium with a pitch of 25 mm. It is positioned directly in the frame, vanes aligned upwards for VH, downwards for VB.
- The gate (or blade) is made of asbestos-free refractory material. It houses the decorative trim which also protects the damper from vandalism.
- The trim is made of galvanised steel. It is fastened to the gate and can easily be pivoted to access the wiring terminal block.
- The terminal block is protected by a plastic cap. A 4-pin terminal block is supplied as standard to connect wires running from the smoke exhaust control panel.
- The VDS 24 V DC self-resetting electromagnetic trip device is fixed on the gate to enable as much free air passage as possible. It can be reset with just one hand.
- Individually packaged in boxes with handles.

FIELD OF APPLICATION

- Smoke evacuation from public areas in type 3B or type 4 residential buildings.
- 1-hour fire rating in accordance with administrative order of 31 January 1986. Ideal for installation on standard 400 x 500 mm duct.

DIMENSIONS (MM)

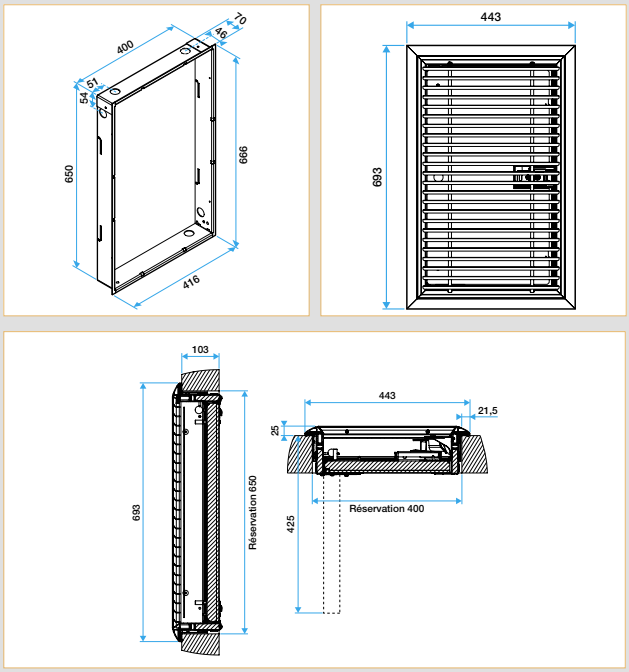

Note: OPTONE-H + Grill is ideal for ceiling heights below 2.45 m. Data sheet with measurements available on request.

Nominal width x nominal height	400 x 650
Opening with mounting frame (no mortar)	400 x 650
Penetrating side of damper (outside frame)	383 x 633
Overall grille dimensions = overall damper dimensions	443 x 693
P = minimum duct depth	425
Air passage	343 x 593

* For installation with mounting frame sealed in a concrete duct, add at least 10 mm for the mortar seal. For other dimensions, use the OPTONE range.

OPTONE-H + Grille: smoke exhaust damper for residential applications

OPTONE.H closed with grille

OPTONE-H open without grille

ADVANTAGES

- *Decorative and vandal-proof metal trim.*
- *Excellent air tightness due to double seal.*
- *Totally unrestricted air passage.*
- *Simplified wiring inlets and outlets.*
- *Decorative grille with removable core.*
- *SIMPLE: Same fire damper for smoke evacuation (VH) as for air intake (VB).*
- *Stock nationally available for short delivery lead times.*
- *Individually box-packaged.*

COMPLIANCE(S)

- *Compliant with CE marking as per EN 12101-8*
- *Free air passage : 20,3 dm²*

INSTALLATION

• Surface-mounted on a 1-hour fire-resistant smoke exhaust duct.
• Attachment of OPTONE-H + Grille on its mounting frame (4 screws supplied). The mounting frame is recommended to ensure the right shape is maintained, to ensure good air tightness and enable the damper to be removed if necessary.
• The OPTONE-H +Grille is always installed with the clips on the top in order to position the vane assembly:
- facing downwards for a VB damper,
- facing upwards for a VH damper.
• Installation instructions available from your local ALDES branch.

ACCESSORIES

Mounting frame

• Made of 20/10 galvanised steel. Robust frame to ensure a secure installation:
- Suited to installation in concrete and light materials such as Promatect, Supalux or Tecniver, etc.
- Drilled on top and side to facilitate the passage of electric wiring.
- Equipped with sealing brackets and fastening holes to receive the damper mounting screws.
- Reversible top/bottom.
- 70 mm depth to ensure durable mechanical strength.

OPTONE-H closed with trim open to access wiring terminals

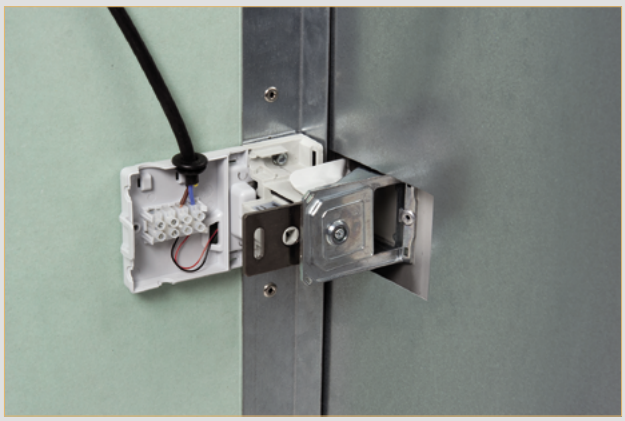

4-pin terminal block

ORDONE smoke exhaust control panel

ADVANTAGES

- *Addressable table: major savings on wiring.*
- *New feature: BCE addressable storey box for smoke exhaust management.*
- *New feature: BNS non-stop box for elevator management.*
- *MDR modules for secure connection of dampers on storey boxes.*

RANGE

Designation	Reference	Discount family
BEA storey box	11044123	***17***
BCE Exhaust control box	11044127	***17***
BNS Non-stop elevator box	11044128	***17***
Black MDR	11044125	***17***
Red MDR end of line	11044126	***17***
ORDONE smoke exhaust control panel	11044122	***17***

DESCRIPTION

ORDONE SMOKE EXHAUST CONTROL PANEL

• The ORDONE smoke exhaust control panel is addressable and enables major savings on wiring. Through the use of appropriate storey boxes, the number of cables is minimised (one for the 230 V power line, one for the damper remote control line, if necessary one for the damper position control line).
• Capacity: 16 zones = 16 storeys on one BUS, or 8 storeys on 2 BUS.
• Maximum of 2 BCE boxes (1 per BUS).
• Maximum of 4 BNS boxes.
• Power supply: 230 V + 10 %-15 % - 50 Hz.
• Current absorption on mains: max. 12 W.
• Rated voltage: 24 V DC.
• Two timer-control outputs for smoke exhaust fan unit.
• Secondary source: two 12V / 7Ah lead batteries, maintenance-free (supplied).
• Battery life: 12 hours on standby with 1 hour safety operation.
• Fan unit control: via NO 1A 30V DC contact, 10 sec. timer.
• Contact report: Fire Alarm x 2, Inverter disruption 1A 30V DC.
• Dimensions (mm): Width x Height x Depth = 265 x 482 x 120

BEA STOREY BOX

• Dimensions (mm): L x H x D = 190 x 150 x 90
• If more than 3 dampers are used with one BEA box, an additional power supply is required (contact us for more details).

MDR MODULES:

• Used to avoid any risk of inversion of poles when inserting the diodes. Pre-wired modules with a built-in diode. Black MDR = intermediate modules. Red MDR = end of line, intended for the last damper on each storey.

BCE EXHAUST CONTROL UNIT:

Used to automatically manage natural air outlets in the event the smoke exhaust cabinet fan fails.
• 24 V relay box outlet, current emission.
• Max. 24 V natural airflow damper outlet, current emission.
• Inverter contact to control natural airflow damper.
• Dimensions (mm): L x H x D = 190 x 150 x 90

BNS NON-STOP ELEVATOR BOX:

Used to ensure the non-stop elevator for type 4 buildings.
• Number of contacts = 16 (1 per storey), NO or NC.
• Dimensions (mm): L x H x D = 190 x 150 x 90

FIELD OF APPLICATION

• Suited for smoke exhaust systems in multi-family housing.

LAYOUT DIAGRAM FOR RESIDENTIAL SMOKE EXTRACTION

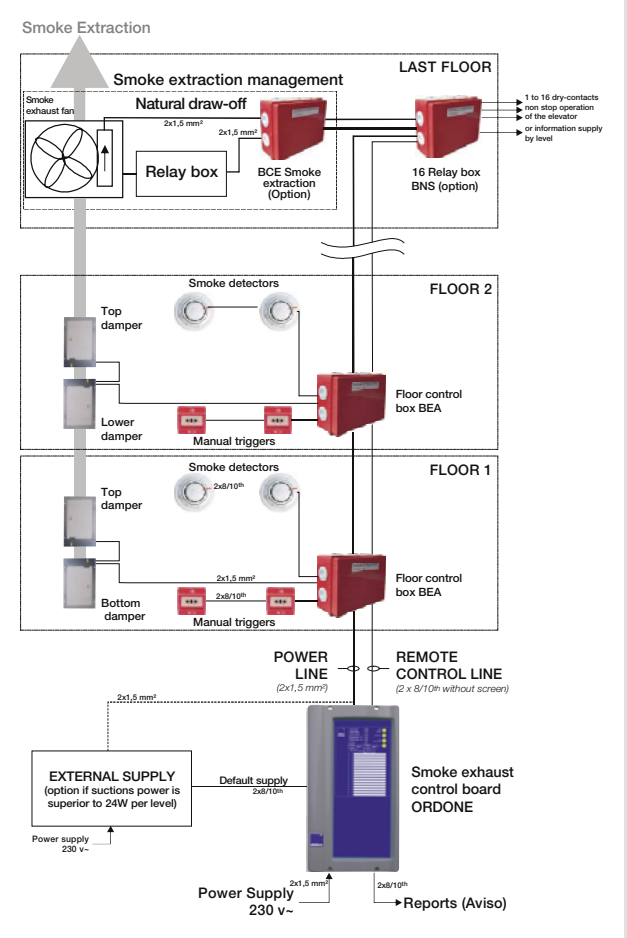

Manual trip device

COMPLIANCE(S)

• NF-S 61936.

RANGE

Designation	Reference	Discount family
Manual trip device	11044121	***17***

DESCRIPTION

• ABS red.
• Fixed in place using screws.
• Dimensions: 90 x 90 x 35 mm.

FIELD OF APPLICATION

• Manual trip device for smoke exhaust systems in multi-family housing, to be installed on each storey in the stairwell.

Smoke detector

COMPLIANCE(S)

• NF-S 61950.

RANGE

Designation	Reference	Discount family
Optical smoke detector	11044120	***17***

DESCRIPTION

• White ABS.
• 24 V DC rated voltage.
• Height: 51 mm with base (34 mm without).
• Diameter: 110 mm with base (105 mm without).
• Base fixed in place with 2 screws. The detector slots onto the base and is fixed in place with a quarter turn.

FIELD OF APPLICATION

• Smoke detector for use in a smoke exhaust system in multi-family housing.

SOS VELONE 4.5/7.2 roof fan for residential applications.

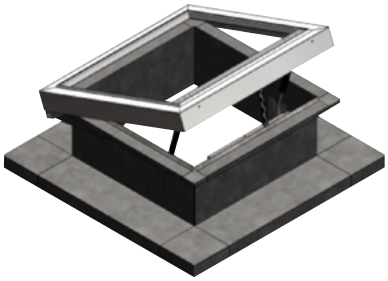

ADVANTAGES

- *SOS VELONE uses no other power supply than that of the ORDONE panel or the Fire safety control system.*
- *Small dimensions: only 30 cm high.*
- *Simple to install.*

COMPLIANCE(S)

- *Article 37 of administrative order of 31 January 1986 amended.*

RANGE

Designation	Reference	Discount family
SOS VELONE 4.5/7.2 EXTENSION KIT	11021496	***08***
SOS VELONE 4.5/7.2 STACK BASE KIT	11021497	***08***
SOS VELONE 4.5/7.2 ROOF BASE KIT	11021498	***08***

OPERATION

- In standby mode, SOS VELONE is closed and the VELONE cabinet is shut down.
- In smoke exhaust mode, SOS VELONE queries the pressure switch which measures the negative pressure inside the duct:
  - Under normal smoke exhaust operation, the VELONE roof fan operates and the pressure switch measures the effective negative pressure SOS VELONE remains closed.
  - If the roof fan fails, the pressure switch recognizes the lack of pressure in the duct SOS VELONE takes over and opens to enable air passage 20 dm2 for natural smoke evacuation.
- Fire department shutdown controls are not compatible with SOS VELONE.

DESCRIPTION

Compatible equipment:

- ALDES VELONE 4.5 or 7.2 smoke exhaust roof fan
- ALDES AXONE micro II 1-speed - DES relay box
- ALDES ORDONE smoke exhaust control panel or Fire safety control system with 24V AES and operating on 24 V DC current emission (48 V on request).
- Key-operated box, non-permanent action, ALDES product code 11057600 to close

SOS VELONE. Composition of SOS VELONE kit (two sub-assemblies):

- Metal base, called an extension or a stack base on which the SOS VELONE is mounted. Equipped with two pneumatic jacks and a chain actuator.
- The electrical control box ensuring the interface between AXONE and the ORDONE BCE box. This box with dimensions of 175 x 130 x 80 mm can be positioned under the VELONE hood or inside the building, close to the BCE for example.

Details of chain actuation device:

This actuator opens and closes the SOS VELONE. It is powered by 24 V DC. It is fixed to the metal base using a mounting console that enables the chain to move. If there is an obstacle between the flap and the frame, actuation stops immediately and no damage is done to the roof fan or the actuator. The small dimensions of the actuator do not hinder smoke extraction from the air. The chain is made of stainless steel.

- Power consumption: 0.65 A under 24 V DC.
- Propulsion and traction force: 200 N.
- Resistant force: 4000 N.
- Dimensions: 361 x 30 x 41 mm.
- CE and TUV certification: 2379/04.

DIMENSIONS

Base models have a flat heel.

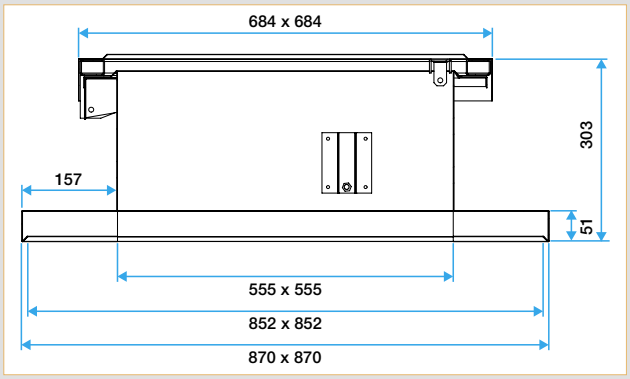

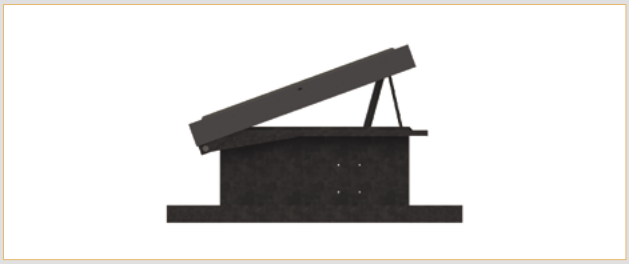

SOS Velone «extended» kit

SOS Velone floor stack base kit

SOS Velone roof base kit

SOS VELONE 4.5/7.2 roof fan for residential applications.

SOS VELONE in standby position

SOS VELONE in safety position

FIELD OF APPLICATION

• SOS VELONE is designed to meet the requirements of the administrative order of 321 January 1986 and is used for smoke extraction from horizontal passageways in residential buildings.
• Article 37 stipulates that: «The smoke exhaust system must operation via natural draw in the event of failure of the fan unit. To meet this requirement, the exhaust ducts must feature a a device on their upper ends that opens into the outside air, with an air passage equal to that of the duct (20 dm2). The device must be actuated by a fan unit operating fault.»

INSTALLATION

• SOS VELONE is designed to:
- cap a duct with the extended version,
- be installed on a flat roof with the stack base,
- be installed on a sloping roof with the roof base (angle or gradient of slope required).
• The VELONE 4.5 or 7.2 smoke exhaust roof fan is a perfect fit over the SOS VELONE unit. It is fixed in place at each corner using the screws supplied.

ACCESSORIES

Designation	Reference	Discount family
AXONE-1V/DES-Tri 4,7 A	11090648	***08***
AXONE-1V/DES-Tri 4,7 A +IPDP	11090649	***08***
RESETTING BOX AXONE	11057600	***08***
EMERGENCY STOP BOX DF	11057601	***08***
1 SP. - 7.5 KW PROX. SWITCH + CONTACTS	11057606	***07***
PRESSURE SWITCH KIT 40-300 PA	11091001	***07***
REARM DOUBLE AXONE/SOS VELONE	11057200	***07***

Useful accessories are described in the description section.

New range of ALDES fire dampers

The fire damper is used to compartmentalise buildings to prevent the spread of fire. It can restore the fire resistance level of walls when they are crossed by ventilation ducts.

Taking its inspiration from those involved in the business every day, ALDES has designed ISONE® 2: a new range of fire dampers, so that no one has to compromise between simplicity and safety.
ISONE® 2 is a range of fire dampers meeting all compartmentation needs.
It is optimised for easy installation and responds to all regulatory requirements.

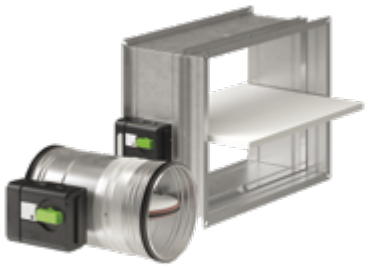

Isone® 2 with fusible link range

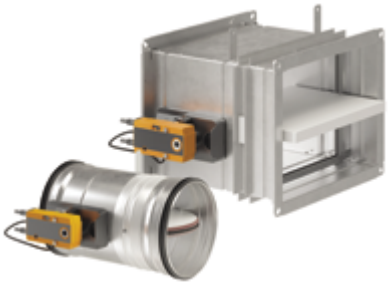

Isone® 2 motorised range

Performance and efficiency

The ISONE® 2 fire damper rang is validated on all usual partitions: concrete wall and slab, plasterboard partitions, plaster tiles, etc.
It has Class C airtightness as standard as per standard EN 1751. Pressure drops are very low: less than 4 Pa at 4 m/s for a D200.

Easy to install

The ISONE® 2 fire damper can be easily installed on any surface. It has a full range of fitting and connection accessories. This range is also fully scalable, from the simplest self-operated damper to the most equipped.

Easy to maintain

The specific ALDES SecurONE application collects the characteristics directly from the damper to facilitate maintenance. The mechanism allows for simple testing with a quick reset and an easily accessible triggering button.

DESCRIPTION

1. Installation bracket
2. Rubber lip seal
3. Blade with tighness seal
4. Galvanised steel body
5. ISONE® 2 PM mechanism

1. Installation bracket
2. Rubber lip seal
3. Blade with tighness seal
4. Galvanised steel body
5. Belimo mecanism

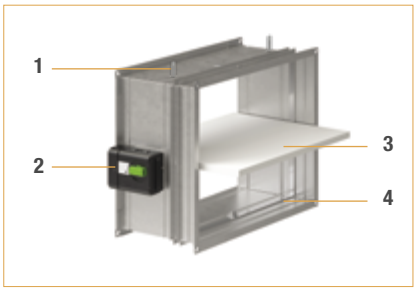

1. Installation bracket
2. ISONE® 2 PM mechanism
3. Blade
4. Galvanised steel body

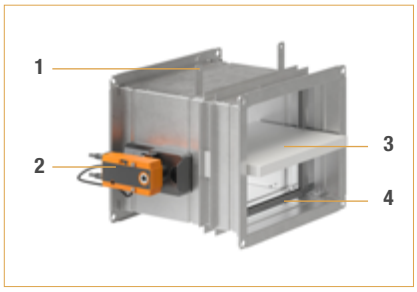

1. Installation bracket
2. Belimo mecanism
3. Blade
4. Galvanised steel body

Fire dampers

Fire damper regulations

ISONE2RANGE COMPLIANCE

STANDARDS AND CERTIFICATIONS	
	• CE marking-compliant: EN 15650, no. 1812-CPR-1837 as per construction product regulation 305/2011 EU. • Fire resistance classification as per standard NF EN 13501. • Airtightness as per EN 1751 Class C. • Compliant and certified as per standards NF S61-937-1 and NF S61937-5 "Actuated Safety Devices fire damper". • NF 537-compliant. • ISO 21925-1:2018. • EXAP EN 15882-2:2015, rules X.45 and X.46

EXPLANATION OF THE EUROPEAN FIRE RESISTANCE CLASSIFICATION:

- **E** = Integrity against flames (corresponds approximately to our former Fire Retardant),
- **I** = Insulation (EI corresponds approximately to our former Fire Damper),
- **120** = duration in minutes,
- **S** = the leakage rate no higher than 200 m^3/h maximum per m², under test pressure, generally 500 or 1500 Pa. The S criterion is mandatory in France,
- **i ⬌ o** = the damper is tested for fire in both directions,
- **Ho** = the damper is tested in a horizontal slab,
- **Ve** = the damper is tested in a vertical wall,
- **500 Pa**: the negative pressure applied to the damper during the fire resistance test.

SUMMARY TABLE OF FIRE RESISTANCE LEVELS OF ISONE FIRE DAMPERS

Type of fire damper	Fire resistance level
Circular ISONE® 2 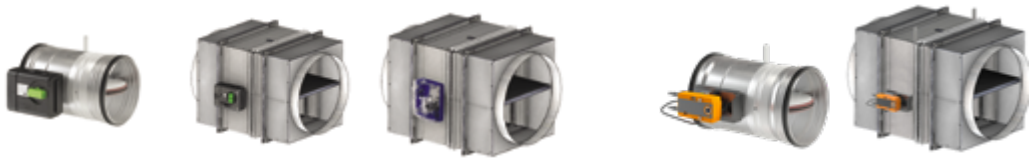 D100 => D500 (PM) D560 => D630 (GM) D100 => D500 (PM) D560 => D630 (GM)	EI 120 S - i <-> o - Ho / Ve - 500Pa - concrete wall and slab - aerated concrete - type F plasterboard partition (2 h fire damper) - plaster tiles th. 100 mm
Rectangular ISONE® 2 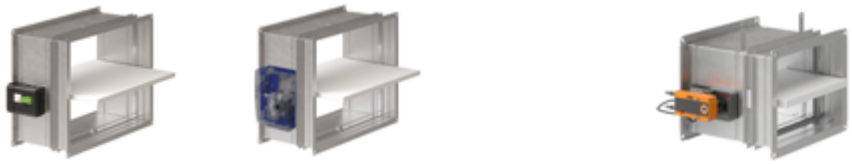 200*100 => 800*600 800*600 => 1500*500/1000*1000 200*100 => 1500*500/1000*1000	EI 120 S - i <-> o - Ho / Ve - 500Pa - concrete wall and slab - aerated concrete - type F plasterboard partition (2 h fire damper) - plaster tiles th. 100 mm Horizontal blade shaft for model GM
ISONE® 1500 Rectangular Circular	EI 120 S - i <-> o - Ve - 1500Pa on: - concrete wall th. 110 mm - aerated concrete wall th. 100 mm EI 120 S - i <-> o - Ho (slab): up to 600² on: - concrete slab th. 150 mm

Fire dampers

ISONE® 2 fire dampers

Presentation of ISONE® 2 range

The new fire damper that simplifies installation and guarantees the safety of occupants and buildings

Isone® 2 with fusible link range

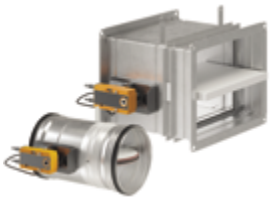

Isone® 2 motorised range

PRODUCT ADVANTAGES

- *Fully upgradeable mechanism*
- *single damper adaptable to all walls*
- *reset handle indicating the damper position*
- *wide electrical connection box*

COMPLIANCE

- *Certified and compliant NF S 61937-5*
- *CE marking as per EN 15650 no. 1812-CPR-1837*
- *Class C airtightness as per EN 1751 as standard*
- *EI 120 S - 500 Pa on concrete, aerated concrete and type F plasterboard wall and slab, PROMAT/SINIAT remote assembly*

PRINCIPLE OF OPERATION

The fire damper is used to compartmentalise buildings to prevent the spread of fire. It can restore the fire resistance level of walls when they are crossed by ventilation ducts.

DESCRIPTION

- ISONE® 2 with fusible link: certified 300 cycles
- Motorised ISONE 2: certified 10000 cycles
- Simplified range and installation made easy on any surface,
- Single damper,
- Full range of fitting and connection accessories.
- Available in wide range of dimensions:
- Circular: Ø100 to Ø900 mm,
- Rectangular (WxH): 200x100 to 1000x1000/1500x500 mm.
- Fully upgradeable range: from the simplest damper to the most equipped,
- Maintenance made easy:
- Damper data collected via ALDES SecurONE application to facilitate on-site maintenance,
- Isone® 2 with fusible link: New mechanism with handle indicating the damper position, can be reset in 2 seconds.
- Isone® 2 motorised: BELIMO motorisation.

SCOPE

- Compartmentation of commercial premises (public buildings, high-rise buildings, commercial or industrial, etc.),
- New builds and renovation.

IMPLEMENTATION

- Installation tabs ensure regular sealing.
- Flush-mounted installation on:
- Concrete and aerated concrete wall
- Concrete and aerated concrete slab
- Plaster tile wall
- Plasterboard type A (1 h) and type F (2 h).
- Comply with the fire resistance classification reports when installing.

AVAILABLE EQUIPMENTS AND OPTIONS

Isone® 2 with fusible **link:**

- 72°C fusible link (by default on the damper)

- Mechanism equipment (see specific §):
- Single (FDCU1) or Double (FDCU1+2) limit switches ,
- Tripping: magnetic actuating mechanism 24/48 V on emission, 24 V or 48 V at power cut-off,
- Reset: mini EHOP motor for ISONE® 2 PM, EHOP motor 30s for GM,
- Remote box 0.7 or 3 m, single or double limit switches (FDCU1, FDCU1+2) for ISONE® 2 PM.
- Damper equipment:
- Coastal option: stainless steel blade shaft,
- Customisable labelling: name of customer, site, installation area, etc.

Isone® 2 motorised:

- Motorised with:
- BELIMO motor 24V BFL24-T-ST, ready to use with communication and power supply unit, for integration in SBS-control networks, MP bus networks, and Modbus networks.
- BELIMO motor BFL230-T

INSTALLATION PRINCIPLE

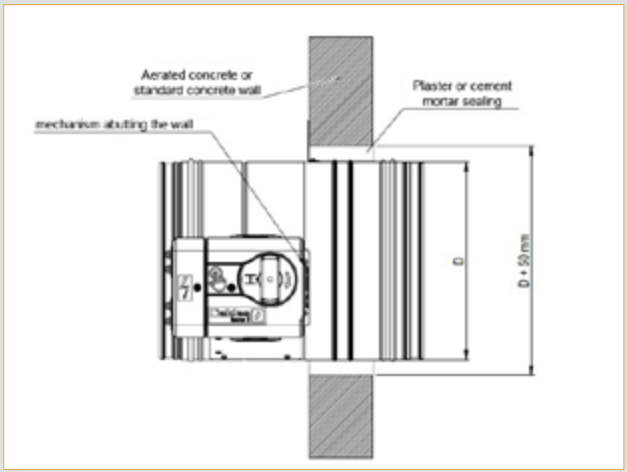

Circular ISONE® 2 in concrete wall

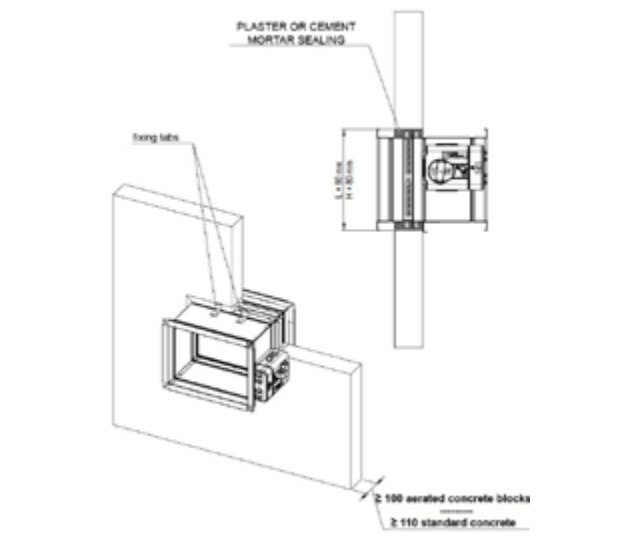

Rectangular ISONE® 2 in concrete wall

MECHANISM POSITION

Mechanism position Circular ISONE® 2

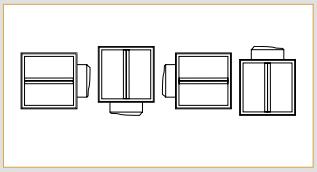

Mechanism position Rectangular ISONE® 2 PM

Circular ISONE® 2

Isone® 2 circular with fusible link

Isone® 2 circular motorised

PRODUCT ADVANTAGES

- *Wide range of dimensions,*
- *Minimum dimensions and low pressure drops*
- *Fully upgradeable mechanism*
- *Stainless steel shaft as option for coastal environments*
- *Damper data read by ALDES SecurONE smartphone app*

COMPLIANCE

- *Certified for 300 cycles and 10000 cycles*
- *CE-marking EN 15650, no. 1812-CPR-1837*
- *Class C airtightness as per EN 1751*

RANGE

Description	Reference	Discount family
With fusible link		
ISONE2 EUROPE-EIS-D100	11043026	***35***
ISONE2 EUROPE-EIS-D125	11043028	***35***
ISONE2 EUROPE-EIS-D160	11043029	***35***
ISONE2 EUROPE-EIS-D200	11043036	***35***
ISONE2 EUROPE-EIS-D250	11043037	***35***
ISONE2 EUROPE-EIS-D315	11043092	***35***
ISONE2 EUROPE-EIS-D355	11043093	***35***
ISONE2 EUROPE-EIS-D400	11043094	***35***
ISONE2 EUROPE-EIS-D450	11043095	***35***
ISONE2 EUROPE-EIS-D500	11043097	***35***
ISONE2 EUROPE-EIS-D560	11043098	***35***
ISONE2 EUROPE-EIS-D630	11043107	***35***
Motorised		
ISONE2 EUROPE-EIS-D100-M	11043145	***35***
ISONE2 EUROPE-EIS-D125-M	11043148	***35***
ISONE2 EUROPE-EIS-D160-M	11043149	***35***
ISONE2 EUROPE-EIS-D200-M	11043156	***35***
ISONE2 EUROPE-EIS-D250-M	11043157	***35***
ISONE2 EUROPE-EIS-D315-M	11043158	***35***
ISONE2 EUROPE-EIS-D355-M	11043159	***35***
ISONE2 EUROPE-EIS-D400-M	11043160	***35***
ISONE2 EUROPE-EIS-D450-M	11043166	***35***
ISONE2 EUROPE-EIS-D500-M	11043167	***35***
ISONE2 EUROPE-EIS-D560-M	11043168	***35***
ISONE2 EUROPE-EIS-D630-M	11043169	***35***

DESCRIPTION

- Range split into two categories: small models (PM) and large models (GM),

ISONE® 2 with fusible link, certified for 300 cycles:

- Circular ISONE® 2 PM:
  - Ø100 to Ø500,
  - circular tunnel body,
  - ISONE® 2 PM mechanism,
  - airtight seal for quick and easy connection.
- Circular ISONE® 2 GM:
  - Ø560 to Ø900,
  - rectangular body with circular ferrules (factory-fitted up to Ø630),
  - ISONE® 2 PM mechanism for Ø560,
  - ISONE® 2 GM mechanism for Ø630.

ISONE® 2 Motorised, certified for 10000 cycles:

- BELIMO motor, including probe and limit switches
  - D100 to D500: BELIMO BFL24-T-ST or BFL230-T
  - D560 to D630: BELIMO BFN24-T-ST or BFN230-T

Circular ISONE® 2 PM Ø100 to Ø500

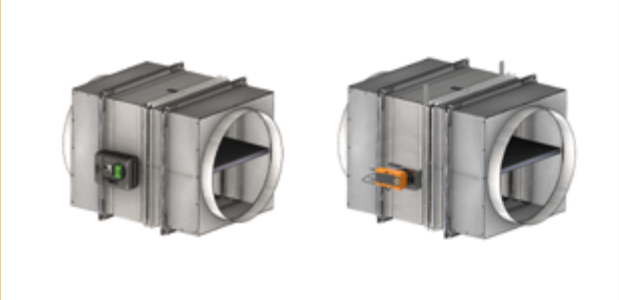

Circular ISONE® 2 GM Ø560

Circular ISONE® 2 GM Ø630

Circular ISONE® 2

Isone® 2 circular with fusible link

Isone® 2 circular motorised

PRODUCT ADVANTAGES

- *Wide range of dimensions,*
- *Minimum dimensions and low pressure drops*
- *Stainless steel shaft as option for coastal environments*
- *Damper data read by ALDES SecurONE smartphone app.*

COMPLIANCE

- *Certified for 300 cycles and 10000 cycles*
- *CE-marking EN 15650, no. 1812-CPR-1837*
- *Class C airtightness as per EN 1751*

AVAILABLE CHOICE OF OPTIONS

Description
Circular Isone® 2 with fusible link (72°C fusible link by default)
MANUAL TRIPPING DEVICE
Set of single limit switches (FDCU1) for self-operated damper
Emission tripping device VDS 24/48 V + FDCU1
Cut off tripping device VM 24 V + FDCU1
Cut off tripping device VM 48 V + FDCU1
Emission tripping device VDS 24/48 V + FDCU1 + EHOP motorisation
Cut off tripping device VM 24 V + FDCU1 + EHOP motorisation
Cut off tripping device VM 48 V + FDCU1 + EHOP motorisation
Double set of FDCU1+2 limit switches for FTE
VDS 24/48 V + FDCU1+2
Cut off tripping device VM 24 V + FDCU1+2
Cut off tripping device VM 48 V + FDCU1+2
Emission tripping device VDS 24/48 V + FDCU1+2+ EHOP motorisation
Cut off tripping device VM 24 V + FDCU1+2 + EHOP motorisation
Cut off tripping device VM 48 V + FDCU1+2 + EHOP motorisation
STAINLESS STEEL shaft
ISONE2 PM remote box 0.7 m
ISONE2 PM remote box 3 m
Isone® 2 circular motorised
24V Motor + probe + limit switches
230V Motor + probe + limit switches
Stainless steel axle

Isone® 2 circular with fusible link:

- ISONE® 2 PM mechanism:
  - Ø100 to Ø560.
- ISONE® 2 GM mechanism:
  - Ø630.

Isone® 2 circular motorised:

- BELIMO motor, including probe and limit switches
  - D100 to D500: BELIMO BFL24-T-ST or BFL230-T
  - D560 to D630: BELIMO BFN24-T-ST or BFN230-T

DIMENSIONS (MM) - FREE SURFACE (DM2) - WEIGHT (KG) - ISONE® 2 PM

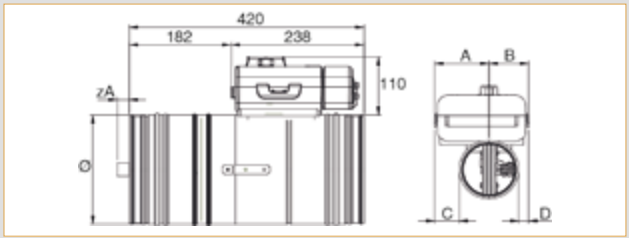

Circular ISONE® 2 PM with fusible link

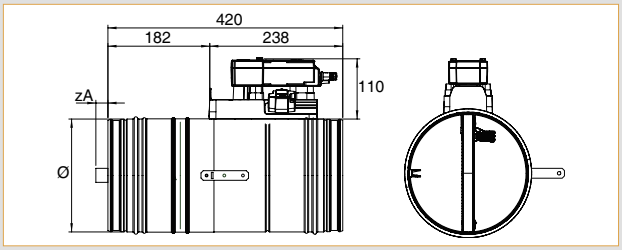

Circular ISONE® 2 PM motorised

Ø D (mm)	A (mm)	B (mm)	C (mm)	D (mm)	zA (mm)	Free surface (dm²)	Weight (kg)
100	97	70	45	18	-	0.33	2.1
125	97	70	32	8	-	0.7	2.4
160	97	70	15	-	-	1.39	2.8
200	97	70	-	-	-	2.4	3.4
250	97	70	-	-	-	4.04	4.2
315	127	40	-	-	22	6.74	5.3
355	127	40	-	-	42	8.55	7.2
400	127	40	-	-	64	11.07	8.4
450	127	40	-	-	89	14.23	9.7
500	127	40	-	-	114	17.79	11.2

DIMENSIONS (MM) - FREE SURFACE (DM2) - WEIGHT (KG) - ISONE® 2 GM

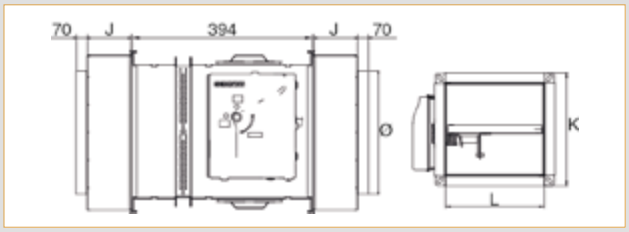

Circular ISONE® 2 GM with fusible link

Ø D (mm)	J (mm)	K - Overall (mm)	W (mm)	X*Y nominal rectangular damper	Free surface (dm²)	Weight (kg)
560	202	665	605	600²	23	25
630	254	735	675	670²	27.8	31

Fire dampers

ISONE® 2 fire dampers

Rectangular ISONE® 2

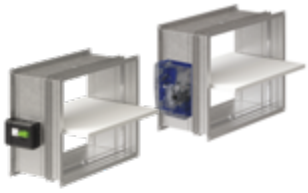

Isone® 2 rectangular with fusible link

Isone® 2 rectangular motorised

PRODUCT ADVANTAGES

- *Minimum dimensions and opening*
- *Low pressure drops*
- *30 mm flange for duct connection*
- *Stainless steel shaft as option for coastal environments*

COMPLIANCE

- *Certified and compliant NF S-61937-5,*
- *CE marking as per EN 15650 no. 1812-CPR-1837*
- *Class C airtightness as per EN 1751 as standard*

RANGE

Description	Reference	Discount family
Isone® 2 rectangulair with fusible link		
ISONE2 EUROPE-EIS RECT PM	11043456	***35***
ISONE2 EUROPE-EIS RECT GM	11043457	***35***
Isone® 2 rectangulair motorised		
ISONE2 EUROPE-EIS RECT PM-M	11043458	***35***
ISONE2 EUROPE-EIS RECT GM-M	11043459	***35***

DESCRIPTION

Isone® 2 circular with fusible link:

- Range split into two categories: small models (PM) and large models (GM),
- Rectangular ISONE® 2 PM:
- (WxH): 200x100 to 800x600 mm,
- ISONE® 2 control mechanism.
- Rectangular ISONE® 2 GM:
- (WxH): W>800, H>600, up to 1500x500/1000x1000,
- ISONE®+ control mechanism.

Isone® 2 circular motorised:

ISONE2Motorised, certified for 10000 cycles with BELIMO motor, including probe and limit switches

- PM model: BELIMO BFL24-T-ST or BFL230-T
- GM model: BELIMO BFN24-T-ST or BFN230-T

IMPLEMENTATION

- Quick dry mounting on plasterboard with the Easynstall kit.
- Oblong ferrules: for connecting the damper to oblong ducting,
- Elongated flange: for installation in thick concrete slab.

DIMENSIONS (MM)

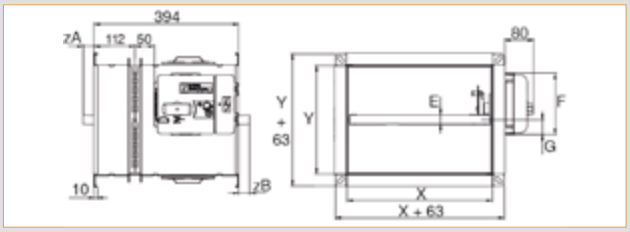

Rectangular ISONE® 2 PM with fusible link

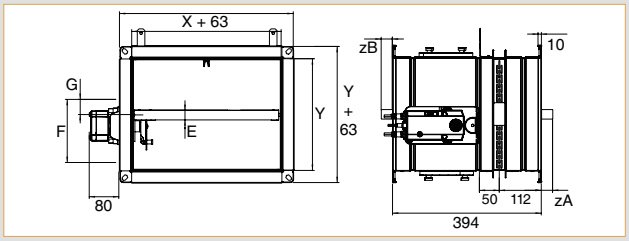

Rectangular ISONE® 2 PM motorised

Model	X (mm)	Y	E	F	E	F	G	ZB
			With fusible link		Motorised			
	(mm)	(mm)	(mm)	(mm)	(mm)	(mm)	(mm)	(mm)
PM	Between 200 and 800	100	25	169	100	200	71	-
		150					71	-
		Between 200 and 600					41	-
GM	Between 850 and 1500	Between 650 and 1000	50	242	250	150	99	Y/2 - 292

ZA, ZB: blade movement.

FREE AIR PASSAGE (DM²)

Height Y (mm)	Width X (mm)																										
	200	**250**	**300**	**350**	**400**	**450**	**500**	**550**	**600**	**650**	**700**	**750**	**800**	**850**	**900**	**950**	**1000**	**1050**	**1100**	**1150**	**1200**	**1250**	**1300**	**1350**	**1400**	**1450**	**1500**
100	0.94	1.21	1.47	1.74	2.00	2.27	2.53	2.80	3.06	3.33	3.59	3.86	4.12	-	-	-	-	-	-	-	-	-	-	-	-	-	-
150	1.83	2.35	2.86	3.38	3.89	4.41	4.92	5.44	5.95	6.47	6.98	7.50	8.01	-	-	-	-	-	-	-	-	-	-	-	-	-	-
200	2.72	3.49	4.25	5.02	5.78	6.55	7.31	8.08	8.84	9.61	10.37	11.14	11.90	10.60	11.24	11.88	12.52	13.16	13.80	14.44	15.08	15.72	16.36	17.00	17.64	18.28	18.92
250	3.61	4.63	5.64	6.66	7.67	8.69	9.70	10.72	11.73	12.75	13.76	14.78	15.79	14.74	15.63	16.52	17.41	18.30	19.19	20.08	20.97	21.86	22.75	23.64	24.53	25.42	26.31
300	4.50	5.77	7.03	8.30	9.56	10.83	12.09	13.36	14.62	15.89	17.15	18.42	19.68	18.88	20.02	21.16	22.30	23.44	24.58	25.72	26.86	28.00	29.14	30.28	31.42	32.56	33.70
350	5.39	6.91	8.42	9.94	11.45	12.97	14.48	16.00	17.51	19.03	20.54	22.06	23.57	23.02	24.41	25.80	27.19	28.58	29.97	31.36	32.75	34.14	35.53	36.92	38.31	39.70	41.09
400	6.28	8.05	9.81	11.58	13.34	15.11	16.87	18.64	20.40	22.17	23.93	25.70	27.46	27.16	28.80	30.44	32.08	33.72	35.36	37.00	38.64	40.28	41.92	43.56	45.20	46.84	48.48
450	7.17	9.19	11.20	13.22	15.23	17.25	19.26	21.28	23.29	25.31	27.32	29.34	31.35	31.30	33.19	35.08	36.97	38.86	40.75	42.64	44.53	46.42	48.31	50.20	52.09	53.98	55.87
500	8.06	10.33	12.59	14.86	17.12	19.39	21.65	23.92	26.18	28.45	30.71	32.98	35.24	35.44	37.58	39.72	41.86	44.00	46.14	48.28	50.42	52.56	54.70	56.84	58.98	61.12	63.26
550	8.95	11.47	13.98	16.50	19.01	21.53	24.04	26.56	29.07	31.59	34.10	36.62	39.13	39.58	41.97	44.36	46.75	49.14	51.53	53.92	56.31	58.70	61.09	63.48	65.87	68.26	-
600	9.84	12.61	15.37	18.14	20.90	23.67	26.43	29.20	31.96	34.73	37.49	40.26	43.02	43.72	46.36	49.00	51.64	54.28	56.92	59.56	62.20	64.84	67.48	70.12	72.76	-	-
650	10.29	13.18	16.07	18.96	21.85	24.74	27.63	30.52	33.41	36.30	39.19	42.08	44.97	47.86	50.75	53.64	56.53	59.42	62.31	65.20	68.09	70.98	73.87	76.76	-	-	-
700	11.18	14.32	17.46	20.60	23.74	26.88	30.02	33.16	36.30	39.44	42.58	45.72	48.86	52.00	55.14	58.28	61.42	64.56	67.70	70.84	73.98	77.12	80.26	-	-	-	-
750	12.07	15.46	18.85	22.24	25.63	29.02	32.41	35.80	39.19	42.58	45.97	49.36	52.75	56.14	59.53	62.92	66.31	69.70	73.09	76.48	79.87	83.26	-	-	-	-	-
800	12.96	16.60	20.24	23.88	27.52	31.16	34.80	38.44	42.08	45.72	49.36	53.00	56.64	60.28	63.92	67.56	71.20	74.84	78.48	82.12	85.76	-	-	-	-	-	-
850	13.85	17.74	21.63	25.52	29.41	33.30	37.19	41.08	44.97	48.86	52.75	56.64	60.53	64.42	68.31	72.20	76.09	79.98	83.87	87.76	-	-	-	-	-	-	-
900	14.74	18.88	23.02	27.16	31.30	35.44	39.58	43.72	47.86	52.00	56.14	60.28	64.42	68.56	72.70	76.84	80.98	85.12	89.26	-	-	-	-	-	-	-	-
950	15.63	20.02	24.41	28.80	33.19	37.58	41.97	46.36	50.75	55.14	59.53	63.92	68.31	72.70	77.09	81.48	85.87	90.26	-	-	-	-	-	-	-	-	-
1000	16.52	21.16	25.80	30.44	35.08	39.72	44.36	49.00	53.64	58.28	62.92	67.56	72.20	76.84	81.48	86.12	90.76	-	-	-	-	-	-	-	-	-	-

11043456 ISONE2 PM FUSIBLE LINK / 11043458 ISONE2 PM MOTORISED

11043457 ISONE2 GM FUSIBLE LINK / 11043459 ISONE2 GM MOTORISED

Rectangular ISONE® 2

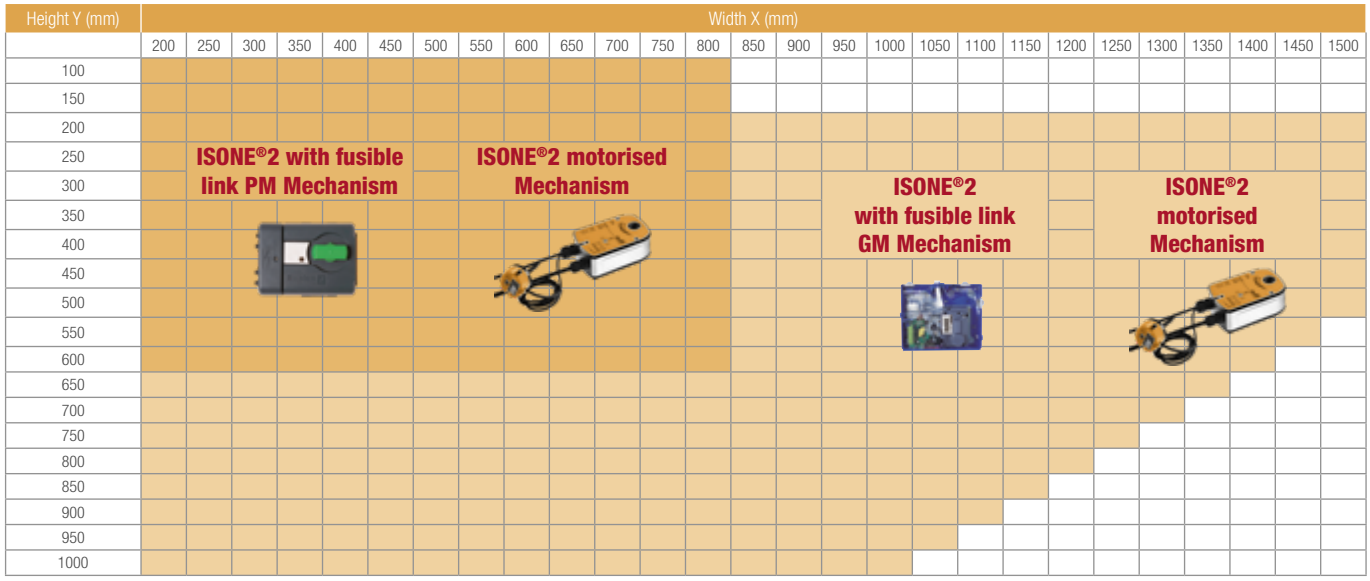

OPTIONS FOR ISONE® 2 RECTANGULAR

Description
Isone® 2 rectangular with fusible link (72°C fusible link by default)
MANUAL TRIPPING DEVICE
Set of single limit switches (FDCU1) for self-operated damper
Emission tripping device VDS 24/48 V + FDCU1
Cut off tripping device VM 24 V + FDCU1
Cut off tripping device VM 48 V + FDCU1
Emission tripping device VDS 24/48 V + FDCU1 + EHOP motorisation
Cut off tripping device VM 24 V + FDCU1 + EHOP motorisation
Cut off tripping device VM 48 V + FDCU1 + EHOP motorisation
Double set of FDCU1+2 limit switches for FTE
VDS 24/48 V + FDCU1+2
Cut off tripping device VM 24 V + FDCU1+2
Cut off tripping device VM 48 V + FDCU1+2
Emission tripping device VDS 24/48 V + FDCU1+2+ EHOP motorisation
Cut off tripping device VM 24 V + FDCU1+2 + EHOP motorisation
Cut off tripping device VM 48 V + FDCU1+2 + EHOP motorisation
STAINLESS STEEL shaft
ISONE2 PM remote box 0.7 m
ISONE2 PM remote box 3 m
Isone® 2 circular motorised
24V Motor + probe + limit switches
230V Motor + probe + limit switches
Stainless steel axle
Easynstall device
Inspection Hatch

ACCESSORIES

Description	Reference	Discount family
ISONE2 KIT EASYNSTAL RECT PM	11043189	*35*
ISONE2 ELONGATED FLANGE RECT 250 mm	11043176	*35*
Oblong ferrules		
OBLONG FERRULE 360X80/400X200 ISONE2 PM	11043196	*35*
OBLONG FERRULE 350X100/400X200 ISONE2 PM	11043197	*35*
OBLONG FERRULE 325X130/350X200 ISONE2 PM	11043198	*35*
OBLONG FERRULE 425X130/450X200 ISONE2 PM	11043199	*35*
OBLONG FERRULE 410X165/450X200 ISONE2 PM	11043217	*35*
OBLONG FERRULE 545X165/600X200 ISONE2 PM	11043218	*35*
OBLONG FERRULE 515X215/550X250 ISONE2 PM	11043219	*35*
OBLONG FERRULE 675X215/700X250 ISONE2 PM	11043257	*35*
OBLONG FERRULE 880X215/950X350 ISONE2 GM	11043258	*35*
OBLONG FERRULE 645X265/700X300 ISONE2 PM	11043259	*35*
OBLONG FERRULE 950X320/1000X350 ISONE2 GM	11043264	*35*

INSPECTION HATCH DETAILS

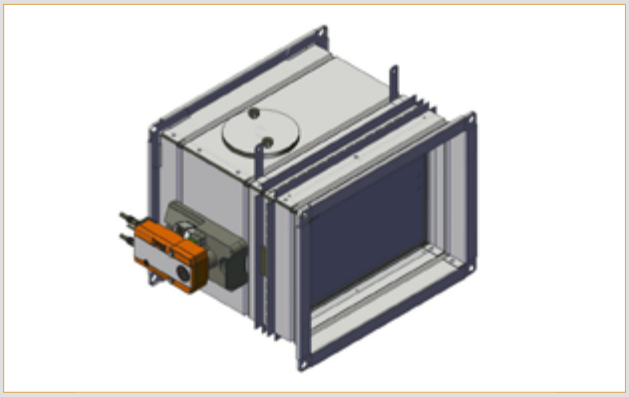

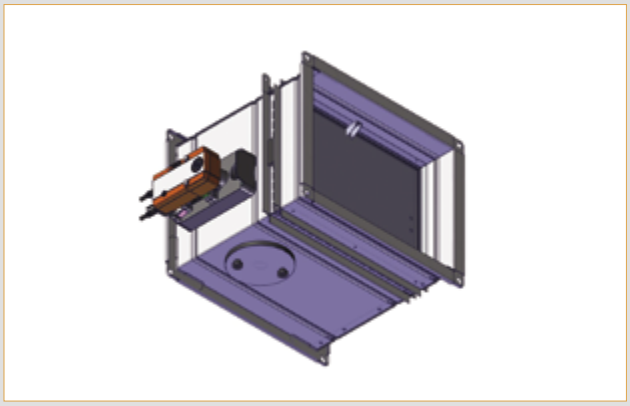

New ISONE® 2 mechanism PM (for PM models)

ISONE2 PM mechanism on circular ISONE® 2

ISONE2 PM mechanism on rectangular ISONE® 2

PRODUCT ADVANTAGES

- *Upgradeable mechanism: all equipment can be added/removed at any time from the most basic damper*
- *24 or 48 V Control errors impossible thanks to dual-voltage emission tripping device*
- *Easy to wire: the connection terminals can be removed from the box*

PRESENTATION

Easier electrical connection:
- The connection and terminal modules can be removed from the box
- The electrical box is separate from the mechanism box: no risk of electric wires getting caught in the mechanism
- Wiring diagram at the bottom and on the cover of the box
- Enough space to add additional modules

Ergonomic handle:
- indicating the damper position, even from afar
- Damper closed by hand in 2 seconds
- Can be used in a shaft/screwdriver in both directions at 90°

Fully upgradeable box:
- Self-operating damper can change from the most basic to the most equipped
- Captive screws on coil, motor and cover

DESCRIPTION

- The ISONE® 2 PM mechanism can be fitted with all tripping, signalling and reset equipment, either in the factory or on site at a later date.
- All this equipment is screwed into the same IP42 box, with a grey base, designed to provide you with a number of installation and test tips.

①: Electrical connection board for limit switches and emission tripping device 24/48 V.
②: Magnetic actuating mechanism.
③: Limit switches board:
- FDCU1
- FDCU1 + FDCU2

④: Reset motorisation electric connection terminal.
⑤: Electric connection diagram.
⑥: EHOP Min. reset motor.

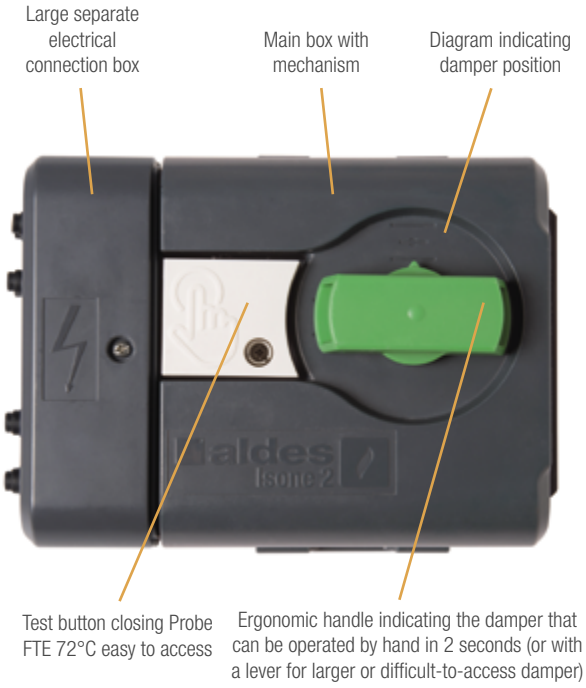

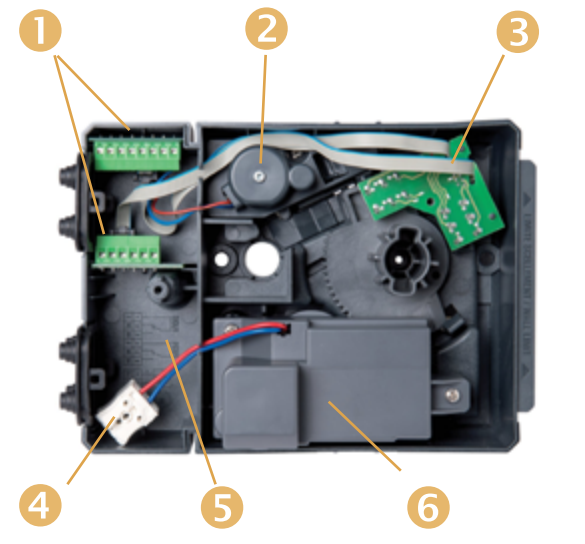

Fire dampers

ISONE® 2 fire damper mechanisms

New ISONE® 2 mechanism PM (for PM models)

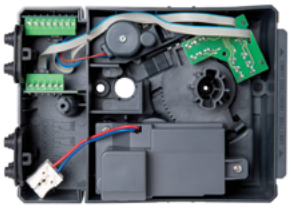

RANGE

	Description	Reference	Discount family
	Thermal fuse		
1	ISONE® 2 PM FTE 70D KIT	11043265	*80*
	ISONE® pack of 10 fuses 72°C	11043401	*80*
	Limit switches only kit		
2	ISONE® 2 PM FDCU1 (limit switches only) KIT	11043267	*80*
3	ISONE® 2 PM FDCU1+2(limit switches only) KIT	11043298	*80*
	Coil only kit		
4	ISONE® 2 PM VDS Emission 24/48 V KIT	11043269	*80*
5	ISONE® 2 PM VM Cut-off 24 V KIT	11043281	*80*
	ISONE® 2 PM VDS Cut-off 48 V KIT	11043293	*80*
	Resetting motor		
6	ISONE® 2 PM EHOP MIN. 24/48 V KIT	11043300	*80*
	Limit switches + Emission tripping device Kit		
7	ISONE® 2 PM FDCU1 + VDS Emission KIT	11043268	*80*
8	ISONE® 2 PM FDCU1+2+ VDS Emission KIT	11043294	*80*
9	ISONE® 2 PM FDCU1+2 + CUT-OFF 24 V KIT	11043296	*80*
	ISONE® 2 PM FDCU1+2 + CUT-OFF 48 V KIT	11043297	*80*
	Other accessories		
10	ISONE® 2 PM plastic box + caps	11043323	*80*
11	ISONE® 2 PM FDCU1 remote box 0.7 m	11043324	*35*
12	ISONE® 2 PM FDCU1 remote box 3 m	11043325	*35*
13	ISONE® 2 PM FDCU1+2 wires remote box 0.7 m	11043396	*35*
14	ISONE® 2 PM FDCU1+2 wires remote box 3 m	11043397	*35*

ACCESSORIES

Thermal fuse kit
11043265

FDCU1 kit
11043267

FDCU1+2 kit
11043298

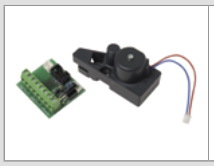

VDS Emission tripping device kit
24/48 V
11043269

VM Cut off tripping device kit
24 V 48 V
11043281 11043293

Min. EHOP30S motor
11043300

FDCU1 limit switches kit + VDS Emission tripping device
11043268

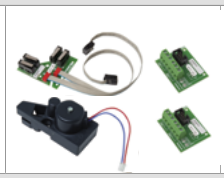

FDCU1+2 limit switches kit + VDS Emission tripping device
11043294

FDCU1+2 limit switches kit + VM Cut off tripping device
24 V 48 V
11043296 11043297

Plastic box + caps
11043323

FDCU1 remote box 0.7 m
11043324

FDCU1 remote box 3 m
11043225

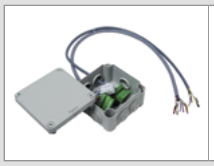

2 FDCU1+2 wires remote box 0.7 m
11043396

2 FDCU1+2 wires remote box 3 m
11043397

ISONE® pack of 10 fuses 72°C
11043401

New ISONE® 2 mechanism PM (for PM models)

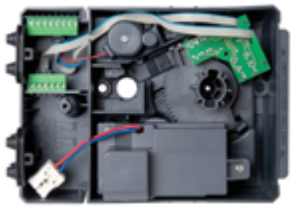

AVAILABLE OPTIONS

TRIPPING OPTIONS

FTE 72°C Thermal tripping device

- Mandatory on all dampers compliant with standard ISO 21925-1:2018.
- A thermal fuse is screwed into the mechanism box.
- Quick access for fuse changes.
- 72°C fuse compliant with ISO 21925-1:2018.

VDS or VM magnetic actuating mechanism

- Operates on external command (e.g. Fire safety control system) via power emission (VDS) or power cut-off (VM).
- An exclusive development of the emission tripping device can operate under 24 or 48 V DC automatically.
- The connectors for electrical connection can be removed from the box for easier wiring.

Manual control

- Mandatory for all dampers compliant with ISO 21925-1:2018.
- White button built into the front panel of the box for triggering without removing the cap.

SIGNALLING OPTIONS

The signalling limit switches are fitted to printed circuit boards. All PCB are clipped into the mechanism box and can be removed quickly. They are fitted with foolproof unpluggable connection terminals.

FDCU1 start and end position limit switch set board

- Includes:
  - end position limit switch FCU1 (indicates that the blade is closed in its safe position),
  - start position limit switch DCU1 (indicates that the blade is open in stand-by position).

PCB for emission tripping device and limit switches FDCU1

- In accordance with NF-S 61.937, it is systematically fitted with an FCU1 end position limit switche. It is equipped with a device that automatically selects 24 or 48 V voltage for emission tripping device.

PCB no. 3 - FCU2 + DCU2

- Systematically fitted with position limit limit switches FCU2 + DCU2.

RESET OPTIONS Manual reset

- Manual reset possible without removing cap.
- Wide handle showing the damper blade position.
- Using a large screwdriver, turn the operating shaft a quarter turn.

Min. EHOP 30S reset motor

- Returns the blade to its standby position without action on the damper.
- Installation in the box using two captive screws in the mechanism box.
- Resets in less than 10 seconds.
- Maximum current absorption 0.7 A.
- Voltage between 24 and 48 V DC/AC

ISONE® 2 GM mechanism (for GM models)

PRODUCT ADVANTAGES

- *Upgradeable mechanism: all equipment can be added/removed at any time; operations can be carried out single-handedly without tools*
- *24 or 48 V Control errors impossible thanks to dual-voltage emission tripping device*
- *Easy wiring: all ISONE terminals are fitted with foolproof devices and can be unplugged without tools*

INTRODUCTION

Since 1984, all ALDES fire dampers are easily upgradeable. This means that, once installed, the damper mechanism can be upgraded by fitting an magnetic actuating mechanism, one or more signalling limit switches and a reset motor. The dampers can therefore be adapted to match changing regulatory requirements and operational needs.
With the Isone® 2 GM mechanism; scalability is simplified to the limit! With equipment that can be fitted single-handedly without tools, the Isone® 2 GM mechanism can be transformed into its most complete version in less than three minutes.

The reset motor is obviously the most interesting to the operator, as he can perform mandatory periodic checks remotely without, therefore, having to dismantle suspended ceilings.
If no mains power supply is available, just use the portable ALDES CONTROL pack.

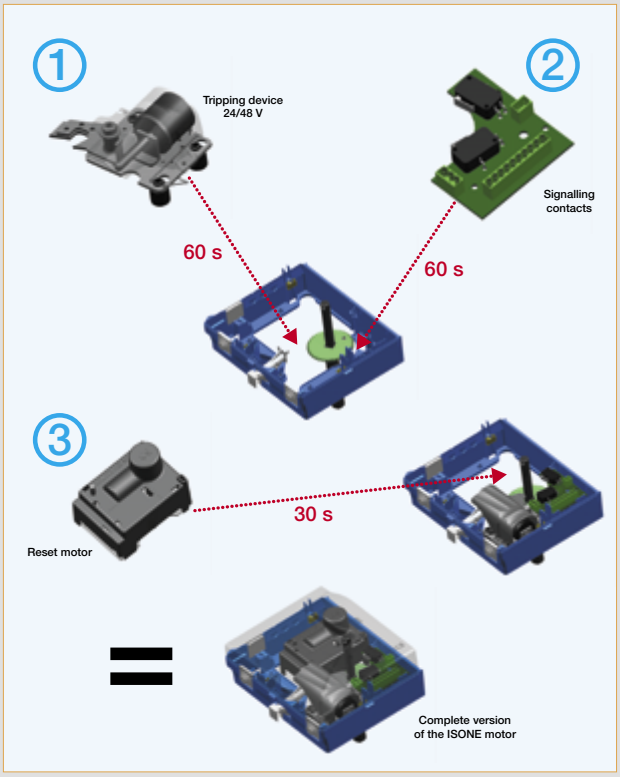

ISONE® 2 GM mechanism (for GM models)

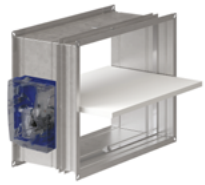

Rectangular ISONE® 2 GM
with Isone® 2 GM mechanism

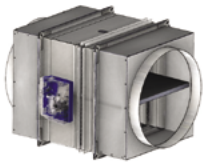

Circular ISONE® 2 GM
with Isone® 2 GM mechanism

RANGE

Description	Reference	Discount family
ISONE FTE 72°C kit	11043400	***80***
Pack of 10 fuses - 72°C ISONE	11043401	***80***
ISONE PLAST. BOX + CM	11043412	***80***
ISONE TRANSPARENT COVER	11043413	***80***
Manual tripping kit	11043411	***80***
ISONE 24/48 VDS kit	11043407	***80***
ISONE 24/48 VM kit	11043408	***80***
FCU1 + DCU1 kit for FTE	11043404	***80***
FCU1 + DCU1 kit for flue	11043406	***80***
FCU2 + DCU2 Kit	11043409	***80***
EHOP 30 sec - 24/48 VDC/VDA kit	11043410	***80***

DESCRIPTION

- The ISONE2 GM mechanism can be fitted with all tripping, signalling and reset equipment, either in the factory or on-site at a later date.
- All this equipment is connected within the same IP42 box, with a blue base, designed to provide you with a number of installation and test tips.
- The transparent clip-fit cover can be removed using a large screwdriver and shows the position of the damper.

①: The 3 cable glands slide in the box.
②: Ergonomic & simple manual trip control.
③: 24/48 V magnetic actuating mechanism.
④: Unpluggable terminal for easy wiring.
⑤: Signalling limit switches.
⑥: Reset lever accessible without removing cover; a quarter turn with a screwdriver is sufficient to open the blade.
⑦: EHOP 30s reset motor.

- The IP42 transparent cover encompasses all the equipment for better protection.

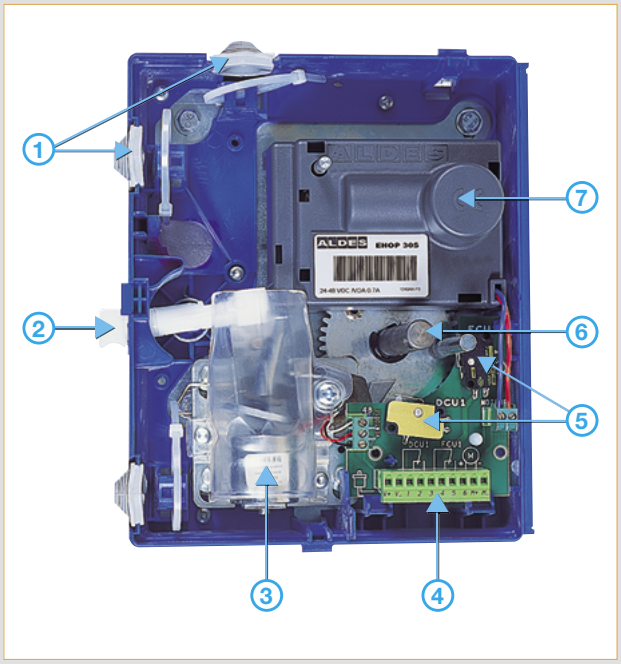

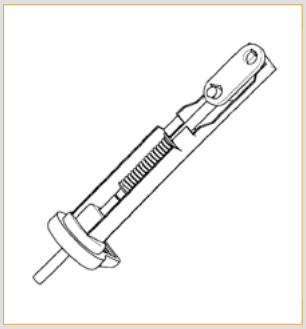

Thermal fuse

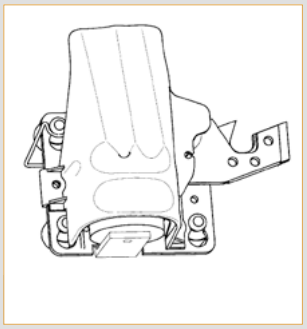

Electromagnetic trip device

ISONE® 2 GM mechanism (for GM models)

AVAILABLE OPTIONS

TRIPPING OPTIONS

FTE 72°C Thermal tripping device

- Mandatory on all dampers compliant with standard ISO 21925-1:2018.
- A stainless steel thermal fuse is screwed into the mechanism box.
- Quick access for fuse changes.
- 72°C fuse compliant with ISO 21925-1:2018.

VDS or VM magnetic actuating mechanism

- Operates on external command (e.g. Fire safety control system) via power emission (VDS) or power cut-off (VM).
- An exclusive development of the tripping device, can operate under 24 or 48 V DC. Manual adjustment switch.
- The tripping device can be unplugged single-handedly without tools.

Manual control

- Mandatory for all dampers compliant with ISO 21925-1:2018.
- White handle built in to the unit for triggering without removing the cover.

SIGNALLING OPTIONS

The signalling limit switches are fitted to printed circuit boards. All PCB are clipped into the mechanism box and can be unplugged quickly without tools. They are fitted with foolproof unpluggable connection terminals.

PCB No.1 - FCU1 - DCU1

- Reserved for dampers fitted with thermal fuse (FTE) only.
- Includes a choice of:
  - end position limit switch FCU1 (indicates that the blade is closed),
  - start position limit switch DCU1 (indicates that the blade is open),
  - the two FCU1 and DCU1 limit switches.

PCB No. 2 - Motor flue

- Suited to dampers fitted with VDS or VM magnetic actuating mechanism.
- In accordance with standard NF-S 61.937, it is systematically fitted with an FCU1 position limit switch. It can also be fitted with a DCU1 start position limit switch.

PCB No. 3 - FCU2 + DCU2

- Clips on to PCB 1 and 2.
- Systematically fitted with position limit limit switches FCU2 + DCU2.

RESET OPTIONS Manual reset

- Manual reset possible without removing cap.
- Using a large screwdriver, turn the operating shaft a quarter turn.

EHOP 30S reset motor

- Returns the blade to its standby position without action on the damper.
- Easily fitted into the mechanism unit single-handedly without tools.
- Unpluggable single-handedly without tools.
- Resets in less than 10 seconds.
- Maximum current absorption 0.7 A.
- Voltage between 24 and 48 V DC/AC

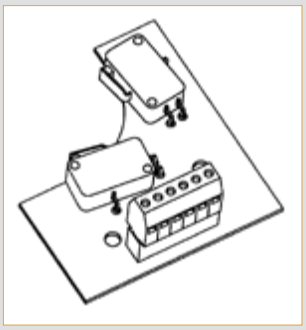

PCB No. 1

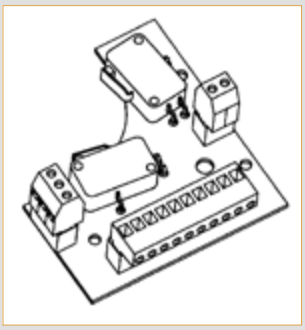

PCB No. 2

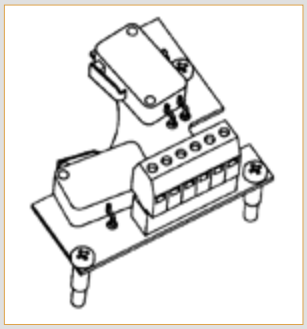

PCB No. 3

Mechanism box

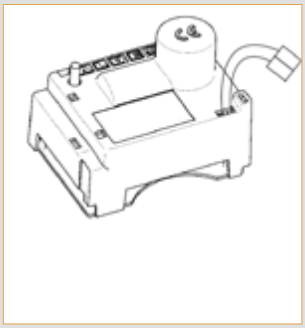

EHOP 30S motor

BELIMO mechanism (for ISONE® 2 motorised range)

DESCRIPTION

- ISONE® 2 fire dampers can house the BLF/BFN mechanism.
- The BLF/BFN motor moves the damper to the operating position at the same time as tensioning the return spring. The damper is turned back to the safety position by spring energy when the supply voltage is interrupted.
- Thermo-electric fuse 72°C (BAE72) for BLF/BFN mechanism.
- Manual or motorised reset.
- 24 V or 230 V.
- IP 54.
- FC/DC signalling limit switches (open/closed position).

24V motor: the BFL24-T-ST / BFL24-T-ST are used. The "-ST" means that the motor is ready to use with communication and power supply unit, for integration in SBS-control networks, MP bus networks, and Modbus networks.

TECHNICAL DETAILS

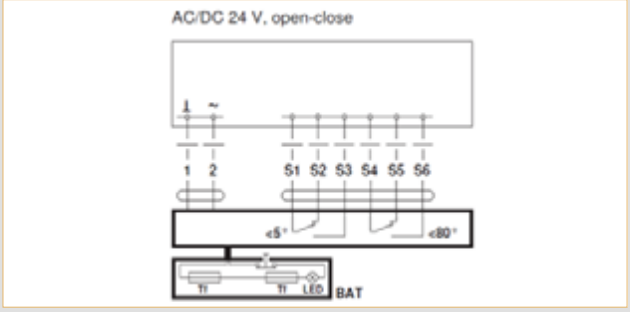

BFL 24 V - Limit switches are illustrated on standby

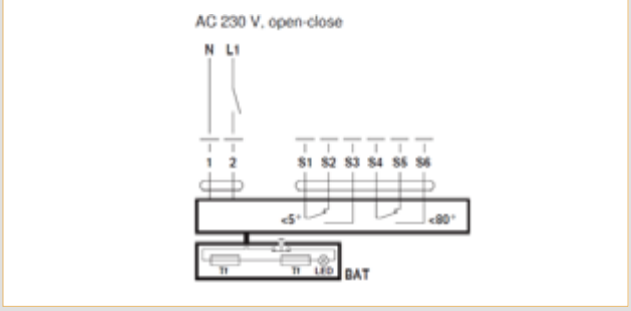

BFN 230 V - Limit switches are illustrated on standby

4 mechanism models	BFL		BFN	
	24 V	230 V	24 V	230 V
Rated Voltage	AC 24 V 50 / 60 Hz - DC 24 V	AC 230 V 50 / 60 Hz	AC 24 V 50 / 60 Hz - DC 24 V	AC 230 V 50 / 60 Hz
Consumption (resetting)	2.5 W	3.5 W	4 W	5 W
Permanent consumption (excl. resetting)	0.8 W	1.1 W	1.4 W	2.1 W
Resetting time	40 to 75 s	40 to 75 s	140 s	140 s
Cable length:	1 m	1 m	1 m	1 m
- motor	2 x 0.75 mm²	2 x 0.75 mm²	2 x 0.75 mm²	2 x 0.75 mm²
- FC/DC limit switches	6 x 0.75 mm²	6 x 0.75 mm²	6 x 0.75 mm²	6 x 0.75 mm²
Weight	1.6 kg	1.7 kg	2.8 kg	3.1 kg

ISONE 1500 with adapter ring: EI 120 S - 1500 Pa

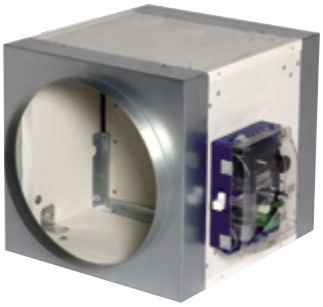

ADVANTAGES

- *Sealed using conventional mortar, no fastening accessories required.*
- *Upgradeable mechanism: all equipment can be connected by hand.*
- *Dual voltage trip (24/48V): prevents control errors.*
- *Easy wiring with detachable terminal block.*

COMPLIANCE(S)

- *Certified and compliant with NF-S-61937-5.*
- *CE marking as per EN 15650 No. 1812-CPD-1016*
- *Approved installation situations, without fastening accessories:*
  - *EI 120 S - 500 Pa on 110 mm concrete wall,*
  - *EI 120 S - 500 Pa on 110 mm concrete slab up to 600 x 600.*
- *ISONE installations must respect fire test reports.*

RANGE WITH CHOICE OF OPTIONS

Designation	References	Discount family
ISONE 1500 Ø 100 mm: use Ø 160 + 2 RCC Ø 160-100 mm	11143574	***35***
ISONE 1500 Ø 125 mm: use Ø 160 + 2 RCC Ø 160-125 mm	11143575	***35***
ISONE 1500 Ø 160 mm	11043062	***35***
ISONE 1500 Ø 200 mm	11043063	***35***
ISONE 1500 Ø 250 mm	11043064	***35***
ISONE 1500 Ø 315 mm	11043065	***35***
ISONE 1500 Ø 355 mm	11043066	***35***
ISONE 1500 Ø 400 mm	11043067	***35***
ISONE 1500 Ø 450 mm	11043068	***35***
ISONE 1500 Ø 500 mm	11043069	***35***
ISONE 1500 Ø 560 mm	11043070	***35***
ISONE 1500 Ø 630 mm	11043071	***35***
ISONE 1500 Ø 710 mm	11043072	***35***
ISONE 1500 Ø 800 mm	11043073	***35***
ISONE 1500 Ø 900 mm	11043074	***35***
ISONE 1500 Ø 1000 mm	11043075	***35***

DIMENSIONS (MM)

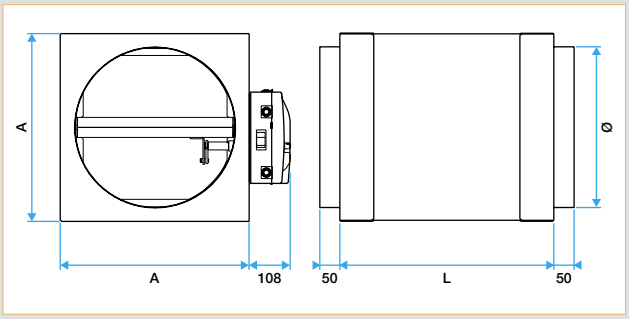

Space requirements (mm) = (A+50) x (A+50).

Ø	160	200	250	315	355	400	450
A	265		315	365	415	465	515
L	415		415	415	480	530	580

Ø	500	560	630	710	800	900	1000
A	565	615	715	765	865	965	1065
L	630	565	600	680	770	870	970

INSTALLATION

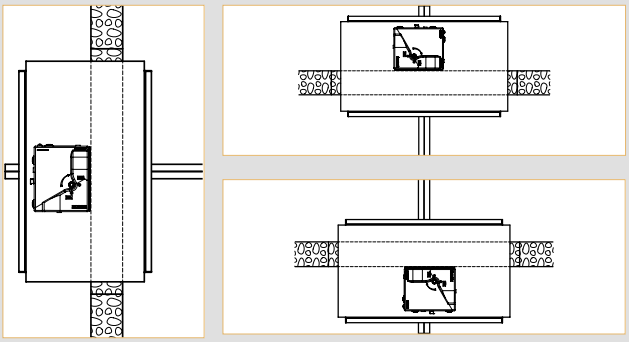

DESCRIPTION

- Rectangular duct element made of refractory material, adapter rings attached to the ends to enable connection to circular ductwork.
- Mobile damper blade made of refractory material, closing against the stops.
- ISONE upgradeable mechanism.

FIELD OF APPLICATION

- Compartmentalisation of commercial buildings (public buildings, towers, etc.).
- Suitable for ventilation systems with operating pressure between 500 Pa and 1500 Pa.

INSTALLATION

- Flush-mounted in a 110 mm concrete wall.
- Flush-mounted in a 150 mm concrete slab up to 600 x 600 mm.
- Sealed with conventional mortar.
- Space requirements (mm) = (A+50) x (A+50).
- The damper blade axis must be horizontal.

AVAILABLE OPTIONS

Choose the mechanism equipment from the table below. Note: specify the trip voltage at the time of ordering for factory adjustment and testing. For sealed connections to ducts, use air tightness seal kits.

Select equipment (indicate trip voltage in order for factory adjustment and testing)	FTE Option Code	24 V Option Code	48 V Option Code
FCU1 open position for "FTE"	43301		
DCU1 closed position contact for "FTE"	43302		
FCU1 + DCU1 open/closed position for "FTE"	43303		
VDS "Power emission" electromagnetic trip device 24/48 Isone		43331	43332
VM "Power cut-off" electromagnetic trip device 48 Isone		43333	43334

Designation	Code
FCU1 open position for " VDS or VM or EHOP"	43337
FCU1 + DCU1 open/closed position for "VDS or VM or EHOP"	43338
EHOP 30S ISONE	43335
Protective Cover	43336

ISONE 1500 with sleeve: EI 120 S - 1500 Pa

ADVANTAGES

- *Sealed using conventional mortar, no fastening accessories required.*
- *Upgradeable mechanism: all equipment can be connected by hand.*
- *Dual voltage trip (24/48V): prevents control errors.*
- *Easy wiring with detachable terminal block.*
- *Serial installation using standard dampers.*

COMPLIANCE(S)

- *Certified and compliant with NF-S-61937-5.*
- *CE marking as per EN 15650 No. 1812-CPD-1016.*
- *Approved installation situations, without fastening accessories:*
  - *EI 120 S - 500 Pa on 110 mm concrete wall,*
  - *EI 120 S - 500 Pa on 110 mm concrete slab up to 600 x 600.*
- *Series installation certified for concrete walls:*
  - *EI 90 S - 1500 Pa.*
  - *EI 120 S - 500 Pa.*
- *ISONE installations must respect fire test reports.*

RANGE WITH CHOICE OF OPTIONS

Designation	References	Discount family
ISONE 1500 RECT	11043057	***35***

- 70 °C thermal fuse included.
- Series installation: use the specific adhesive (code 11043056) to assemble the ISONE 1500 standard dampers (code 11043056).

DESCRIPTION

- Rectangular duct element made of refractory material, sleeves attached to the ends to enable connection to rectangular ductwork.
- Mobile damper blade made of refractory material, closing against the stops.
- ISONE upgradeable mechanism.

FIELD OF APPLICATION

- Compartmentalisation of commercial buildings (public buildings, towers, etc.).
- Suitable for ventilation systems with operating pressure between 500 Pa and 1500 Pa.

INSTALLATION

- Flush-mounted in a 110 mm concrete wall.
- Flush-mounted in a 150 mm concrete slab up to 600 x 600 mm.
- Sealed with conventional mortar, no fastening accessories required.
- Space requirements (mm) = (X+100) x (Y+100).
- The damper blade axis must be horizontal.
- For sections not covered by the pricing list, use series installations, taking the appropriate dimensions.
- Series installation:
- Select the damper dimensions by subtracting 70 mm, which corresponds to the thicknesses of the two touching faces. Example: for a series of 1800 x 1200 mm, it is possible to use four X Y dampers: X = (1800 - 70) / 2 = 865 mm Y = (1200 - 70) / 2 = 565 mm.

Serial installation of ISONE 1500 dampers is very simple:

1 - Glue the touching faces of the dampers together using the appropriate adhesive (code 11043056).

2 - Secure the touching faces using 5 x 40 mm VBA screws, spaced every 150 mm (approx.).

3 - When connecting using offset flanges, it may be necessary to notch the sleeves by a few mm.

ACCESSORIES

Designation	References	Discount family
Specific adhesive	11043056	***35***

DIMENSIONS (MM)

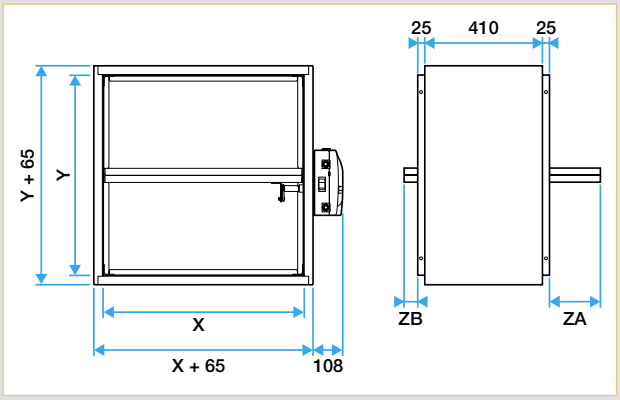

Y	jusqu'à 300	350	400	450	500	550	600
ZA	0	10	35	60	85	110	135
ZB	0	0	0	0	0	0	0

Y	650	700	750	800	850	900	950	1000
ZA	160	185	210	235	260	285	310	335
ZB	30	55	80	105	130	155	180	205

INSTALLATION IN SERIES

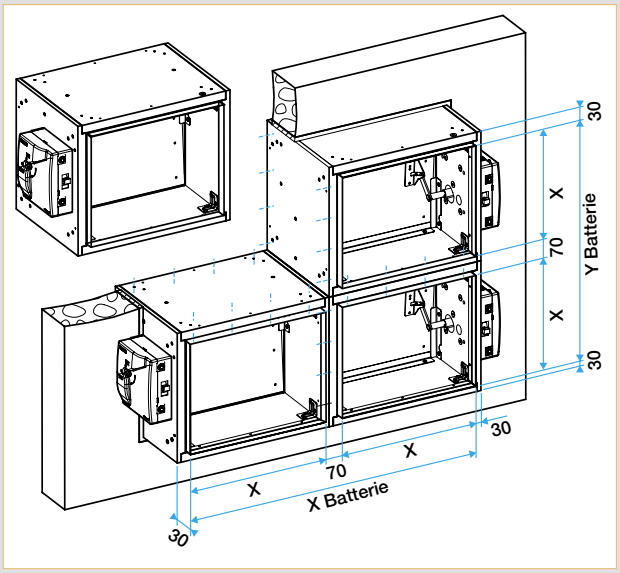

ISONE 1500 with sleeve: EI 120 S - 1500 Pa

RANGE & WEIGHT (KG)

Height Y	Width X															
	200	250	300	350	400	450	500	550	600	650	700	750	800	850	900	950
200	17	18	20	21	23	24	25	27	28	-	-	-	-	-	-	-
250	18	20	21	23	24	26	27	29	30	33	35	36	-	-	-	-
300	20	21	23	24	26	28	29	31	32	35	37	38	40	41	43	-
350	21	23	24	26	28	29	31	33	34	37	39	41	42	44	45	47
400	23	24	26	28	29	31	33	35	36	39	41	43	44	46	48	50
450	-	26	28	29	31	33	35	36	38	42	43	45	47	49	50	52
500	-	27	29	31	33	35	37	38	40	44	45	47	49	51	53	55
550	-	-	31	33	35	36	38	40	42	46	48	50	52	53	55	57
600	-	-	32	34	36	38	40	42	44	48	50	52	54	56	58	60
650	-	-	-	37	39	42	44	46	48	51	53	56	58	60	62	64
700	-	-	-	39	41	43	45	48	50	53	56	58	60	62	64	67
750	-	-	-	-	43	45	47	50	52	56	58	60	62	65	67	69
800	-	-	-	-	44	47	49	52	54	58	60	62	65	67	69	72
850	-	-	-	-	-	49	51	53	56	60	62	65	67	69	72	74
900	-	-	-	-	-	50	53	55	58	62	64	67	69	72	74	77
950	-	-	-	-	-	-	55	57	60	64	67	69	72	74	77	79
1,000	-	-	-	-	-	-	57	59	62	66	69	71	74	77	79	82

Height Y	Width X										
	1,000	1,050	1,100	1,150	1,200	1,250	1,300	1,350	1,400	1,450	1,500
350	49	50	-	-	-	-	-	-	-	-	-
400	51	53	55	56	58	-	-	-	-	-	-
450	54	56	57	59	61	63	65	66	-	-	-
500	57	58	60	62	64	66	68	70	71	73	75
550	59	61	63	65	67	69	71	73	75	77	-
600	62	64	66	68	70	72	74	76	78	-	-
650	66	68	70	72	74	77	79	81	-	-	-
700	69	71	73	75	77	80	82	-	-	-	-
750	71	74	76	78	80	83	-	-	-	-	-
800	74	76	79	81	83	-	-	-	-	-	-
850	77	79	82	84	-	-	-	-	-	-	-
900	79	82	84	-	-	-	-	-	-	-	-
950	82	85	-	-	-	-	-	-	-	-	-
1,000	85	-	-	-	-	-	-	-	-	-	-

AVAILABLE OPTIONS

Choose the mechanism equipment from the table below. Note: specify the trip voltage at the time of ordering for factory adjustment and testing. For sealed connections to ducts, use air tightness seal kits.

Select equipment (indicate trip voltage in order for factory adjustment and testing)	FTE Option Code	24 V Option Code	48 V Option Code
FCU1 open position for "FTE"	43301		
DCU1 closed position contact for "FTE"	43302		
FCU1 + DCU1 open/closed position for "FTE"	43303		
VDS "Power emission" electromagnetic trip device 24/48 Isone		43331	43332
VM "Power cut-off" electromagnetic trip device 48 Isone		43333	43334

Designation	Code
FCU1 open position for " VDS or VM or EHOP"	43337
FCU1 + DCU1 open/closed position for "VDS or VM or EHOP"	43338
EHOP 30S ISONE	43335
Protective Cover	43336

CF1/CF2 fire damper cartridge

COMPLIANCE(S)

- *CE marking-compliant as per EN 15650: No. 1396-CPD-0055.*
- *EI 60 S - (ve ho i o).*
- *EI 120 S (ve ho i o).*

RANGE

Dimensions	References	Discount family
CF1		
Ø 100	11040430	***35***
Ø 125	11040431	***35***
Ø 150	11040432	***35***
Ø 160	11040433	***35***
Ø 200	11040434	***35***

Dimensions	References	Discount family
CF2		
Ø 100	11040435	***35***
Ø 125	11040436	***35***
Ø 150	11040437	***35***
Ø 160	11040438	***35***
Ø 200	11040439	***35***

DESCRIPTION

- Element to be fitted into an air duct of the same nominal diameter.
- CE-certified as per EN 15650.
- Fire resistance rating - CF1 = EI 60 S (Ve Ho i o) at 300 Pa - CF2 = EI 120 S - (Ve Ho i o) at 300 Pa.
- Possible end position signal contact on request.

FIELD OF APPLICATION

- The fire damper cartridges meet the requirements applicable to damper terminals specified in Article CH32 of the applicable fire regulations.

DIMENSIONS - WEIGHT

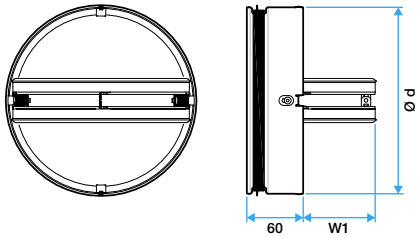

(mm)	d (mm)	EI 60/120 S W1 (mm)	EI 60 S	EI 120 S
			Weight (kg)	
100	98.5	27	0.3	0.3
125	123.5	39.5	0.4	0.4
150	148.5	52	0.4	0.6
160	158.5	57	0.5	0.6
200	198.5	77	0.7	0.9

Window sleeve for cartrige

RANGE

Designation	References	Discount family
Window sleeve Ø 100 mm	11013121	***3***
Window sleeve Ø 125 mm	11013122	***3***
Window sleeve Ø 150 mm	11013123	***3***

Designation	References	Discount family
Window sleeve Ø 160 mm	11013124	***3***
Window sleeve Ø 200 mm	11013125	***3***

DESCRIPTION

- Used to remove the cartrige for maintenance.

Core terminal (SR 143 grille)

RANGE

Dimensions	References	Discount family
Ø 100	11052226	***10***
Ø 125	11052227	***10***
Ø 160	11052228	***10***
Ø 200	11052229	***10***

DESCRIPTION

- Adjustable core.
- Steel - RAL 9010 white epoxy paint finish.
- Slots into the duct.
- Supplied with connector sleeve.

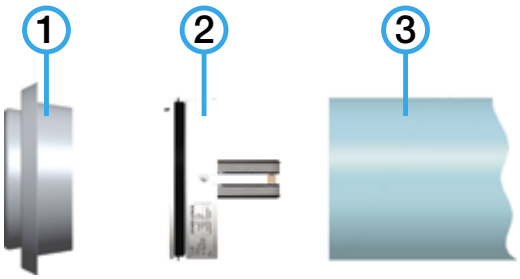

1 = Type SR 143 metallic-cored grille with sleeve.
2 = CF1 or CF2 cartridge.
3 = Duct.

ALDES CONTROL pack

ADVANTAGES

- *Portable standalone function controller.*
- *Ideal to control a damper independently of the Fire safety control system.*
- *Simple to use.*
- *Automatic voltage selection.*

RANGE

Designation	References	Discount family
ALDES CONTROL Pack - ISONE-VANTONE	11041695	***17***
10-pin cord kit for ISONE - VANTONE (after Sep. 2005).	11041696	***17***
CONTROL PACK bag kit	11041697	***17***
CONTROL PACK charger kit	11041698	***17***
12-pin cord kit for VRFI - VANTONE (after Sep. 2005).	11041699	***17***
16 pin comb kit	11041770	***70***
Optone cable kit	11044386	***15***
CORD KIT FOR PACK CONTROL ISONE2 PM	11043339	***35***

• The pack features:
- A controller,
- A protective carry-bag,
- A 10-pin connection cord for ISONE and VANTONE (after Oct 2005)
- A mains charger.

• Automatic voltage selection: 24 or 48 V DC.

DESCRIPTION

• Portable standalone automatic function controller.
• Rechargeable via mains outlet.

FIELD OF APPLICATION

• Used to test the operation of all components of a fire damper or smoke exhaust damper :
- Electromagnetic trip device,
- Position indication contacts,
- Reset motor.

• Simulates the various sequences of the central system.
• The «Aldes Control» pack can be used to accept equipment prior to its connection to the central fire safety control system.

Notes

AIRFLOW CONTROL AND DUCTWORK

Airflow/measurement adjustment and control . . . . . p. 253
Ductwork: galvanised rigid, aluminium and special . . . . . p. 278
Insulation and acoustics . . . . . p. 313
Flexible and semi-rigid ducts . . . . . p. 320
Ductwork accessories, installation and equipment . . . . . p. 326

MR Modulo
MR Mono

Constant Airflow Regulators

- **Optimum control:** efficient, durable and silent control.
- **Innovative design:** rotating ring to adjust the airflow on site (Aldes patent for the MR Modulo). Stainless steel control spring.
- **Easy to install:** no tool needed to adjust the airflow (MR Modulo). No electrical connection. Multi-position installation. Direct integration in the ducts and branch connections.

→ Page 264

AIRFLOW CONTROL/ MEASUREMENT

Dynamic control

Mod VMT system
p. 253

VAV
p. 261

Control module

MR range
p. 268

RMA Ø 125 mm & Ø 200 mm
p. 269

Balancing dampers

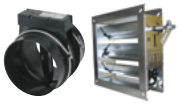

Balancing dampers
p. 271

Isolation dampers/ registers
p. 273

Measuring equipment

Micro pressure gauge and Pressure gauge
p. 277

DUCTWORK: GALVANISED RIGID, 3CE+, ALUMINIUM AND SPECIAL

Circular ducts

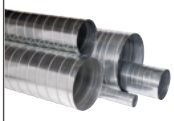

Circular ducts
p. 278

Oblong galvanised ductwork

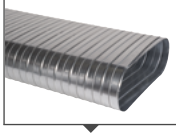

Oblong ducts
p. 297

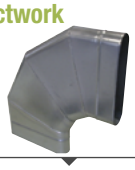

Oblong accessories
p. 299

INSULATION AND ACOUSTICS

Insulation

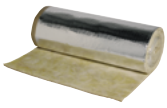

Outside insulation: roll of wool, roll of insulation
p. 313

Acoustics

OCTA
p. 314

OCTA with baffle
p. 315

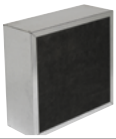

ECTA, ECTA 100 & ECTA 200
p. 316

Anti-vibration products: pads, plates
p. 319

FLEXIBLE AND SEMI RIGID DUCTWORK

Flexible semi-rigid ducts

Airtight flexible connection: RT Flex
p. 320

Galvanised Alflex and compacted aluminium
p. 321

Insulated aluminium and soundproofed Alflex
p. 321

Flexible ducts

Alflex special gas
p. 323

Insulated and sound-proofed aluminium Algaine
p. 325

DUCTWORK ACCESSORIES, INSTALLATION AND EQUIPMENT

Roof cowls

Aesthetic roof outlet: STE
p. 326

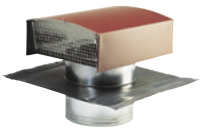

Standard roof outlet: STS
p. 327

Roof cowl and screen rain visor
p. 328

Ductwork installation and equipment

Airtightness: RAA, RAV and RAP adhesive tape
p. 329

Mounting accessories
p. 331

Servicing: Inspection hatches, inspection male connector
p. 339

MDA Mod | CO_2 Mod | Optic Mod | Pilot Mod

VMT Mod

The solution that optimizes ventilation according to your presence.

Our concern?

To guarantee a good air quality to the occupants while reducing the energy consumption of the fan but also that related to heating or cooling.

We created the VMT Mod solution that adapts the ventilation rates according to the activity in the room (2 detection modes by presence sensor or CO2).

The other advantage of the VMT Mod is to guarantee a good diffusion of air for the comfort of the occupants.

Crédit photos : Getty Images - 2015

#HealthyLiving

aldes

VMT Mod system (On-demand ventil. system for commercial buildings)

The energy-efficient on-deman ventilation system.

ADVANTAGES

- *Energy savings through airflow control according to room occupancy.*

MDA Mod

CO2 Mod sensor

DESCRIPTION

- In a VMT Mod on-demand ventilation system, the airflow is automatically controlled according to room occupancy and therefore according to actual needs.
- Three room occupancy detection methods: - Agito: Analyses the occupancy rate according to the number of movements detected (Optic Mod sensor). Ventilation is proportional to the activity detected. - Presence: Detection of occupant presence or absence (Optic Mod sensor). Low or boost airflow depending on the occupancy detected. - CO2: Analysis of occupancy rate using CO2 Mod sensor: Low / Boost / Proportional airflow depending on activity.
- One Pilot Mod main module which: - received detection data, - provides data to the system.
- Two components that can be controlled depending on the installation configuration: - A MDA Mod for rooms served by a ductwork branch (multi-zone), - A fan or an exhaust/ HRV unit for single-zone ventilation systems.
- All components of the VMT Mod system are connected together by two wires that supply power and transport data.

SYSTEMS

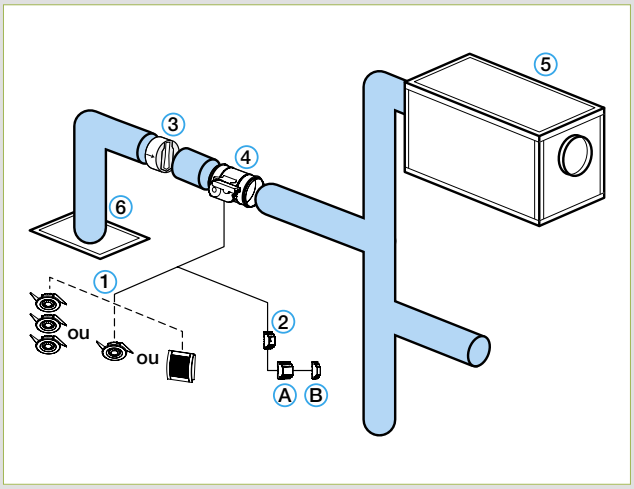

Mod multi-zone VMT.

1): Sensor(s);
2): Main module;
3): MR;
4): Mod MDA;
5): Fan unit or air conditioning unit;
6): Diffuser;
A': Transformer;
B': C2 circuit breaker.

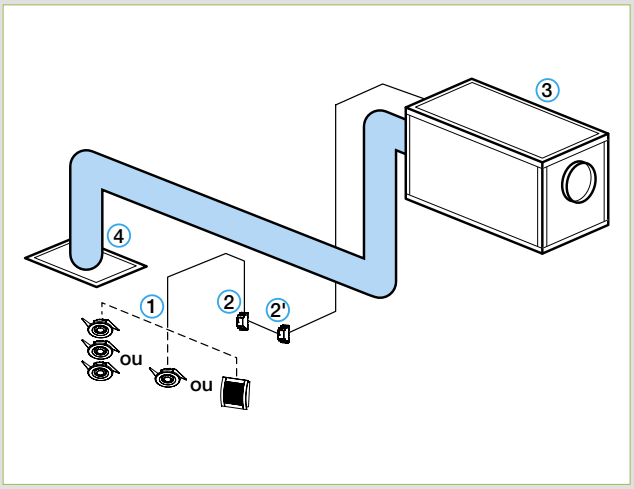

Mod single-zone VMT.
1): Sensor(s);
2): Main module;
2'): Optional module;
3): Fan unit or air conditioning unit;
4):Diffuser.
A: Transformer;
B: C2 circuit breaker.

Pilot Mod main module

Pilot Mod

ADVANTAGES

- *Just two wires for data + power.*
- *Reports faults.*
- *Reports the number of modules connected.*
- *Produced in France.*

RANGE

Designation	References	Discount family	Pack. 1
Pilot Mod	11017150	***12***	28

DESCRIPTION

- Mandatory for VMT Mod system operation.
- Centralises all bus information.
- Powers the system and supplies data.
- Features a mode selection button - Low / Boost / Proportional.
- Reports the number of modules connected to the system.
- Detects and reports faults and short-circuits on the system.

FIELD OF APPLICATION

- VMT Mod system.
- Single-zone and Multi-zone use.
- Used with Agito, Presence and CO2 sensors.

DIMENSIONS (MM)

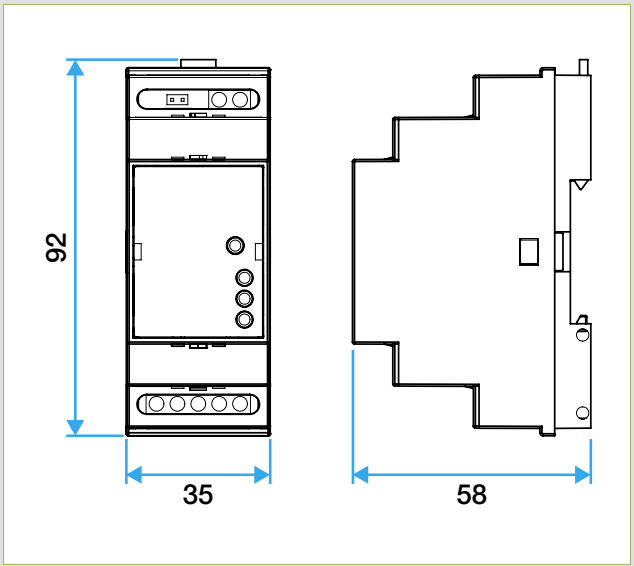

INSTALLATION

NB: 12 V AC / 12 VA power supply delivered via transformer 11017110 (Cf. *accessory pages*). Use of the pairing Pilot Mod 11017150 + transformer 11017110 is mandatory for EMC certification. One Pilot Mod module per transformer.

- NB: one Pilot Mod module per ventilated zone.
- Module format enables mounting on DIN rails in electrical cabinets. Width corresponds to two electrical modules.
- Connected to system by just two wires, 1.5 or 2.5 mm2 cross-section.
- Maximum number of CO2 Mod sensors per Pilot Mod main module: 1.

Dynamic control

Mod VMT system

Optional modules

In/Out 0-10V Mod

Relay Mod

Contact Mod

ADVANTAGES

- *Just two wires for data + power.*
- *Reports faults*
- *Communication with external elements: BMS, clock, window rebate contact, etc.*
- *Produced in France.*

RANGE

Designation	References	Discount family
In/Out Mod module 0-10V	11017151	***12***
Relay Mod module	11017152	***12***
Contact Mod module	11017153	***12***

DESCRIPTION

3 modules to enable numerous interactions with elements external to the VMT Mod system.

• The In/Out 0-10 V module receives or transmits a value between 0 and 10 V from or to outside the system. This value corresponds to a CO2 content (0-2000 ppm), a movement level (0 to 100 %) or a ventilation level (0-100 %). - One 0-10 V input. - One 0-10 V / 20 mA max. output.

• The Relay Mod module transmits the status of a system element: reports presence, CO2 threshold exceeded, valve open/closed status, faults, etc. - One contact normally open. - Used to switch 500 mA under 230 V AC

• The Contact Mod module receives data from an external source and forces an event. - Two dry-contact digital inputs per module. Contacts normally open. - Examples of input wiring: window rebate contact, clock, switch. - Events triggered on output: forced ventilation at max. level, minimum level or shut down. Event selected by a switch on the module (1 switch per input).

FIELD OF APPLICATION

- Mod VMT system.
- Single-zone and Multi-zone use.
- Used with Agito, Presence and CO2 sensors.

DIMENSIONS (MM)

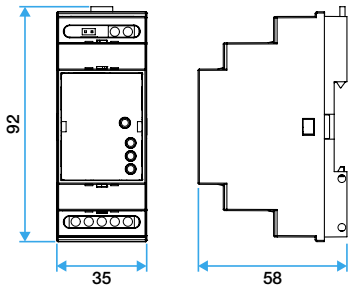

INSTALLATION

• Module format enables mounting on DIN rails in electrical cabinets. Width corresponds to two electrical modules.

• Connected to system by just two wires, 1.5 or 2.5 mm2 cross-section.

• Maximum number of optional modules per Mod Pilot main module:

- One 0-10 V In/Out module
- Two Relay Mod modules
- Two Contact Mod modules

Examples of installation

VMT Mod CO2 + transmit Co2 level information to GTB system.

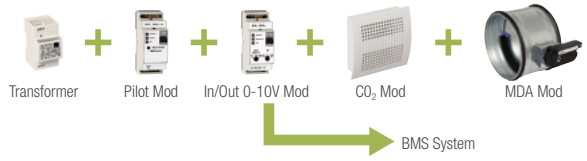

VMT Mod Occupancy detection + report a failure with light indicator.

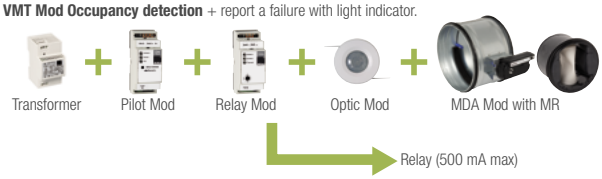

VMT Mod Agito + enslave the operation of the system to a clock.

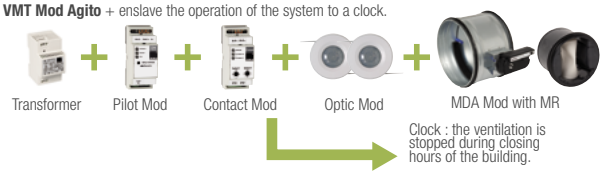

Dynamic control

Mod VMT system

MDA Mod

ADVANTAGES

- *Just two wires for data + power.*
- *Diameters from 125 to 315 mm, metallic.*
- *Optimal air diffusion (time-proportional).*
- *Airtight ductwork (double seals).*
- *MDA Mod open indicator.*
- *Produced in France.*

RANGE

Designation	References	Discount family
MDA Mod 125	11017155	***12***
MDA Mod 160	11017156	***12***
MDA Mod 200	11017157	***12***
MDA Mod 250	11017158	***12***
MDA Mod 315	11017159	***12***

DESCRIPTION

• Using information sent by the Mod Pilot modules, the MDA Mod module alters the airflow in its ductwork branch to control the air renewal rate according to needs.
• The MDA operates in open/closed mode but it controls airflow by adjusting the terminal opening time = timer-controlled proportional mode. - In Presence mode: It is either open 100 % of the time (100 % of the nominal airflow) when the room is occupied, or for 10 % of the time (10 % of the nominal airflow) if the room is unoccupied. - In Agito mode: It is either open x % of the time (x % of the nominal airflow) when the room is occupied, or for 10 % of the time (10 % of the nominal airflow) if the room is unoccupied. - In CO2 mode: It is either fully open (100 % of the nominal airflow) if the defined threshold has been exceeded, or open for 10 % of the time (10 % of the nominal airflow if the threshold has not been reached.
• This timer-controlled proportional mode has three major interests: - Energy savings, - The nominal airflow can be controlled by an MR, - in air supply applications the diffusers are used at their nominal settings, which does not generate discomfort for occupants.
• One single type of MDA Mod for air supply and exhaust applications: modes are selected using a switch on the MDA Mod.
• The MDA Mod modules automatically control the airflow according to the number of modules used for air supply and exhaust.
• Position indicators for the MDA Mod flap (open/closed): - Flap position indicator, - LED lamp signalling reception of open or close message.
• Tip: associate the MDA Mod operation to a timer switch corresponding to the hours of use (e.g. 8 am - 8 pm). This will ensure savings in energy consumption. Simply connect the timer to an optional Contact Mod module.
• Associate the MDA Mod to an MR for precise airflow control.

FIELD OF APPLICATION

• VMT Mod system
• Multi-zone use.
• Used with Agito, Presence and CO2 sensors.

ACCESSORIES

Designation	References	Discount family
125		
MR MODULO VMT D125 36-84M3	11016194	***11***
MR MODULO VMT D125 100-170M3	11016195	***11***
160		
MR MODULO VMT D160 120-200M3	11016196	***11***
200		
MR MODULO VMT D200 230-420M3	11016197	***11***
250		
MR MODULO VMT D250 260-425M3	11016198	***11***

DIMENSIONS (MM)

NB: Identical motor unit whatever the diameter of the MDA Mod.

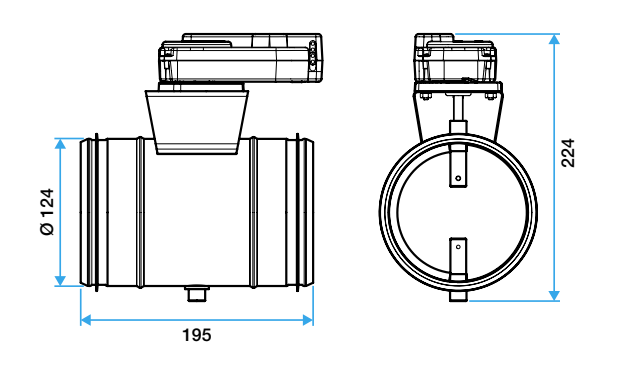

TECHNICAL DETAILS

• MDA diameters:
- Ø 125 mm (max. airflow 160 m3/h*),
- Ø 160 mm (max. airflow 250 m3/h*),
- Ø 200 mm (max. airflow 375 m3/h*),
- Ø 250 mm (max. airflow 500 m3/h*),
- Ø 315 mm (max. airflow 1100 m3/h at 4 m/s*). * Use an MR.
• Tolerance on airflow (0; +30%).
• Weight of MDA Mod: 700 to 2500 g depending on diameter.
• Pressure range: that of MR i.e. 50 - 250 Pa.

INSTALLATION

• Connected to system by just two wires, 1.5 mm2 cross-section.
• Maximum number of MDA Mod per Pilot Mod main module: 6. NB: For one Pilot Mod module, the same number of MDA Mod must be installed on the air supply as on the air exhaust.
• For better airflow distribution, it is recommended to use an identical diameter for all the MDA Mod air supply modules, and an identical one for the MDA Mod air exhaust modules.

Optic Mod sensor

ADVANTAGES

- *Easy installation.*
- *Just two wires for data + power.*
- *No cleaning or maintenance required.*
- *Agito system: exclusive to Aldes.*

RANGE

Designation	References	Discount family
Optic Mod sensor	11017135	***12***

DESCRIPTION

- Movement in the room is detected by the optical (infra red) sensor, which sends electrical impulses (0-1) to the main module board for data processing.
- The optical sensor includes: - a Fresnel lens, - pyro-electric sensors.
- Features an LED to indicate detection of movement.

FIELD OF APPLICATION

- VMT Mod system.
- Single-zone and Multi-zone use.
- Used with Agito and Presence sensors.

INSTALLATION

- Connected to system by just two wires, 1.5 mm2 cross-section.
- Maximum number of Optic Mod sensors per Pilot Mod main module: 8.
- Sensors are mounted in the suspended ceiling in a 62-70 mm diameter hole.
- Location of sensors:

- Use with Presence:
Detection zone = at 1 m from the partition walls, 4 m x 4 m.
Maximum height for ceiling-mounted installation: 3.5 m.
Maximum height for wall-mounted installation: approx. 2.5 m.
- Use with Agito:
Optimum distance between two sensors: 2.4 to 4.2 m.
Detection zone = at 1 m from the partition walls.
Maximum height for ceiling-mounted installation: 3.5 m.

DIMENSIONS (MM)

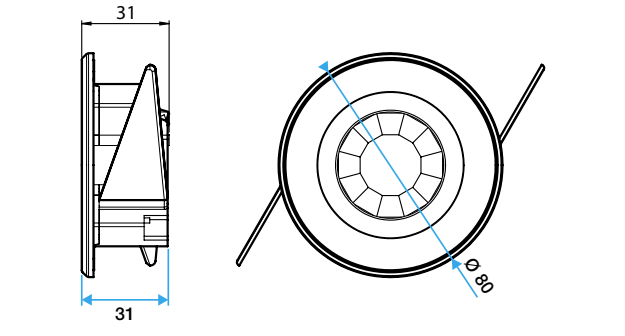

System			Choice of modules*	
Type	Installation	Operation	Main module	Optional module
Presence	Multi-zone (MDA Mod)	Boost or min.	Mod Pilot configured in «boost or low» mode	-
	Single-zone (Fan)	Boost or min.	Mod Pilot configured in boost or min. mode	Mod Relay
Agito	Multi-zone (MDA Mod)	Time-proportional	Mod Pilot configured in proportional mode	-
	Single-zone (Fan)	Time-proportional	Mod Pilot configured in proportional mode	Mod Relay
*These are the minimum modules necessary to the operation of the system. For additional options, it is possible to add optional modules. For module configuration: see mounting instructions.				

CO2 Mod sensor

ADVANTAGES

- *Easy installation.*
- *Just three wires for data + power.*
- *Automatic recalibration - no maintenance.*
- *Particularly suited to large-volume rooms.*

RANGE

Designation	References	Discount family
Mod CO2 sensor	11017136	***12***

DESCRIPTION

- Measures the CO2 content in a room.
- The principle is to measure the absorption of infra-red rays, to determine the content in the room. CO2 measurement is not affected by dust or water vapour.
- The sensor measurement range is from 0 to 2,000 ppm.
- Possible to be used with min/max operating mode thanks to Trip threshold: 1100 ppm by default. - Threshold adjustable to between 700 and 1700 ppm in 200 ppm increments using a switch (not covered in Technical Approval) .
- The output signal is proportional to the ambient content measured.
- Response time < 7 minutes.
- Power consumption: 500 mA.

FIELD OF APPLICATION

- VMT mod system
- Single-zone and Multi-zone use.
- Large-volume rooms.
- CO2 detection

INSTALLATION

- Connected to system by three wires, 1.5 or 2.5 mm² cross-section. - The third wire provides the additional power required to operate the CO2 sensor. To be connected to the V+ terminal on the Mod Pilot module.
- Maximum number of Mod CO2 sensors per Mod Pilot main module: 1.
- Wall-mounted installation in the room served.
- Height of installation on wall: from 1.5 to 3.5 m.
- Avoid draughts (from doors, air supply outlets, etc.) and dead zones (shelves, curtains, etc.).
- Avoid proximity to heat sources and occupants (radius of 1 to 2 m from a workstation).

SERVICING

- In light of the low airflow speeds around sensitive elements, CO2 measurement is not affected by dust or water vapour.
- The Mod CO2 sensor requires no recalibration throughout its life cycle. It features two infra-red sources with separate operating cycles, which enables it to recalibrate itself automatically.

DIMENSIONS (MM)

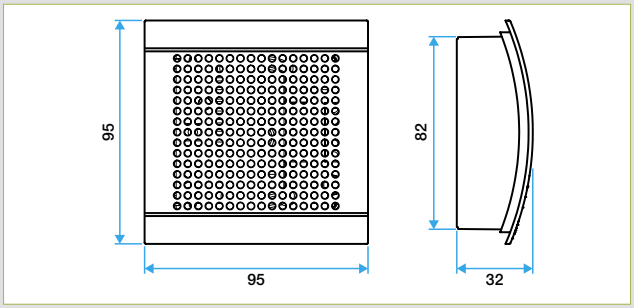

CHOICE OF MODULES

System			Choice of modules*	
Type	Installation	Operation	Main module	Optional module
CO2	Multi-zone (MDA Mod)	Boost or min (with threshold)	Mod Pilot configured in boost or min. mode	-
	Single-zone (Fan)	Boost or min (with threshold)	Mod Pilot configured in boost or min. mode	Mod Relay
	Single-zone (Fan)	Proportional	Mod Pilot configured in proportional mode	Mod In/Out 0-10V

*These are the minimum modules necessary to the operation of the system. For additional options, it is possible to add optional modules. For module configuration: see mounting instructions.

INSTALLATION

- Sensors can be fixed in place with two screws.
- Wall- or ceiling-mounted installation in the room served.
- In all configurations the sensor must never be influenced directly by an air supply jet.
- Avoid draughts (from doors, air supply outlets, etc.) and dead zones (shelves, curtains etc.).
- Avoid proximity to heat sources and occupants (radius of 1 to 2 m from a workstation).
- In threshold mode, the CO2 sensor default trip threshold is 1100 ppm. If necessary, it is possible to modify this using a switch. See instructions guide.

Dynamic control

Mod VMT system

TDA

ADVANTAGES

- *Automated operation controlled by occupancy detection.*
- *Easy installation.*
- *Lighting control also possible.*
- *Produced in France.*

RANGE

Designation	References	Discount family
TDA battery	11017105	***12***
TDA 12 V AC	11017106	***12***
Fixed TDA	11017107	***12***
TDA 12 V AC + relay connection	11017126	***12***

DESCRIPTION

- One TDA per ductwork branch.
- Automatic airflow control according to room occupancy.
- Occupancy control: air renewal activated when the room is occupied.
- Possible to report occupancy data via a relay, for example to activate room lighting at the same time as the ventilation.
- Terminal features no controls to ensure homogeneous design.
- Air exhaust terminal with automatic occupancy detection.
- Reduced airflow: 7.5 m^3/h at 100 Pa.
- Basic airflow: 25, 50, 75 or 90m^3/h under 100 Pa.
- Battery version (6 x LR61 batteries supplied).

FIELD OF APPLICATION

- Controlled ventilation system for commercial buildings.
- Multi-zone use.
- Occupancy detection.
- Does not work with VMT Mod system and its associated modules.

ACCESSORIES

Designation	References	Discount family
6V 100 mA relay	11057102	***80***
Support for 6V 100 mA relay	11057103	***80***

DIMENSIONS (MM)

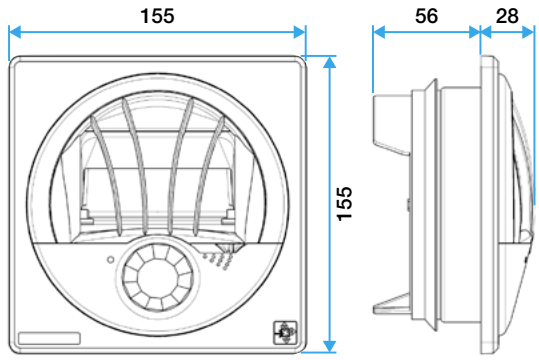

TECHNICAL DETAILS

Diameter of shaft	Sealed shaft Ø 125 mm
Power supply	9 V alkaline battery (6LR61 type) or mains supply (12 V AC).
Type of detection	Fresnel lens built into terminal
Pressure range	100-160 Pa.
Weight	270 g

INSTALLATION

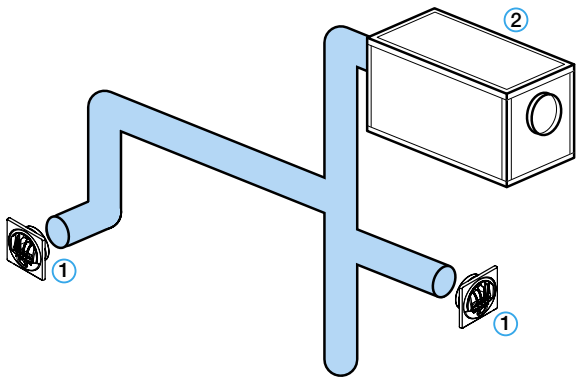

1: TDA; 2: Fan.

Electric power supply

RANGE

Designation	References	Discount family
Transformer 12 V AC - 12 VA fused	11017161	*12*

DESCRIPTION

• Power Supply: - In the VMT Mod system, only the Mod Pilot is powered. This component then power the rest of the system via the 2-wire Bus. - Power supply delivered via transformer 230 V AC / 12 V AC - 12 VA. Fuse ref 11017110. NB: Use of the pairing Mod Pilot 11017150 + transformer 11017110 is mandatory for EMC certification. NB: One Mod Pilot module per transformer.
• System protection: - The transformer 11017110 is fitted with a built-in 100 mA fuse. - Install a C2 circuit breaker upstream of the transformer.

FIELD OF APPLICATION

• VMT Mod system.

DIMENSIONS (MM)

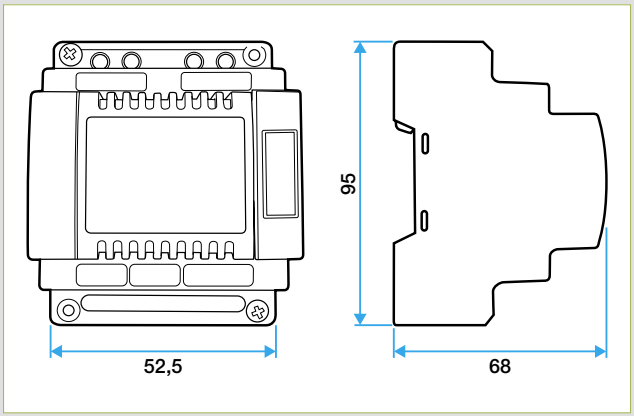

INSTALLATION

• In Mod VMT system: One Mod Pilot module per transformer.
• Module format enables mounting on DIN rails in electrical cabinets. Width corresponds to 4 electrical modules.

VAV (Variable air volume)

VAV standard

Insulated VAV

RANGE

Designation	References	Discount family
VAV CIRC + MOT D100	11017030	***10***
VAV CIRC + MOT D125	11017031	***10***
VAV CIRC + MOT D160	11017032	***10***
VAV CIRC + MOT D200	11017033	***10***
VAV CIRC + MOT D250	11017034	***10***
VAV CIRC + MOT D315	11017035	***10***
VAV CIRC + MOT D400	11017036	***10***
VAV CIRC + MOT D500	11017037	***10***
VAV CIRC INSULATED + MOT D100	11017039	***10***
VAV CIRC INSULATED + MOT D125	11017040	***10***
VAV CIRC INSULATED + MOT D160	11017041	***10***
VAV CIRC INSULATED + MOT D200	11017042	***10***
VAV CIRC INSULATED + MOT D250	11017043	***10***
VAV CIRC INSULATED + MOT D315	11017044	***10***
VAV CIRC INSULATED + MOT D400	11017045	***10***
VAV CIRC INSULATED + MOT D500	11017046	***10***

DESCRIPTION

- Body and damper made of galvanised steel.
- Easy set-up thanks to the display.

FIELD OF APPLICATION

- Automatic airflow control according to predefined setting (temperature, CO2, occupancy, etc.) between two minimum / maximum values (calibrated on site after installation).
- Ventilation and air conditioning systems.
- Air supply and exhaust.
- Meeting rooms, concert halls, sterile rooms, etc.
- Airflow range: 50 to 5299 m3/h (accuracy < 5%).

INSTALLATION

- Inserted directly between two circular ducts.
- Horizontal or vertical assembly.
- Airflow direction indicated on the element.
- Possible to adjust minimum/maximum airflow on site.
- Delivered with Belimo motor (on request)

DIMENSIONS

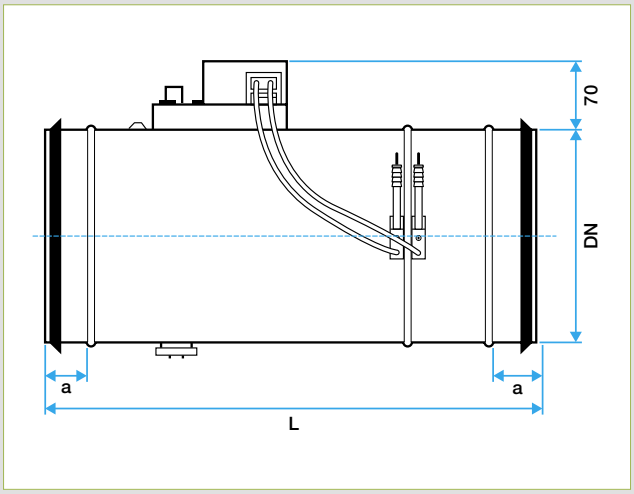

VAV standard

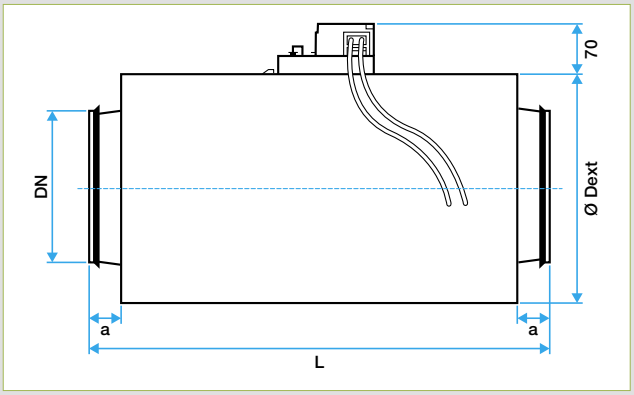

Insulated VAV

TECHNICAL DETAILS

		Standard VAV		Insulated VAV	
Nominal	Airflow range (m^3/h)	D ext (mm)	L (mm)	D int (mm)	L (mm)
100	50 - 200	99	400	200	400
125	88 - 331	124	400	225	400
160	145 - 543	159	400	260	400
200	226 - 848	199	400	300	400
250	353 - 1325	249	580	350	580
315	561 - 2103	314	580	415	580
400	904 - 3391	399	650	500	650
500	1413 - 5299	499	850	600	850

CO2 Sens sensor

ADVANTAGES

- *Particularly suited to large-volume rooms.*
- *Compatible with VAV.*

RANGE

Designation	References	Discount family
CO2 Sensor	11017090	***12***
Power Supply	11017180	***12***

DESCRIPTION

- Used to measure CO2 content and temperature in a room.
- For CO2: the principle is to measure the absorption of infra-red rays, to determine the content in the room. CO2 measurement is not affected by dust or water vapour.

FIELD OF APPLICATION

- Demand controlled ventilation system for commercial buildings.
- Compatible with VAV.
- Single-zone use.
- CO2 and temperature detection.

TECHNICAL DETAILS

- The CO2 sensor requires a 24 V power supply (230V transformer available as accessory).
- The sensor measurement range is 0 to 2000 ppm for CO2 and 0 to 50°C for temperature.
- The 0-10V output signal is proportional to the ambient content measured.
- Response time < 9 minutes.
- Power < 2.5 W.

INSTALLATION

- Wall-mounted installation in the room served.
- Height of installation on wall: from 1.5 to 3.5 m.
- Avoid draughts (from doors, air supply outlets, etc.) and dead zones (shelves, curtains, etc.).
- Avoid proximity to heat sources and occupants (radius of 1 to 2 m from a workstation).

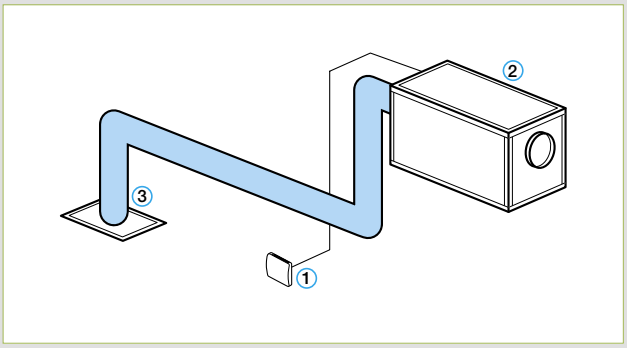

1: Sensor
3: Fan unit or HRV unit
4: Diffuser

MR Modulo

Multi-airflows constant airflow regulator.

Balancing ventilation ductworks is a priority in commercial buildings.

It allows to obtain an air conditioning system optimally adjusted and thus avoid the inconvenience related to excessive airflows (noise, consumption ...) or insufficient (air quality ...).

The **MR Modulo** solution offers powerful and durable control, while remaining silent (no noise due to pressure variations). Simple to install, simply turn the rotating ring to adjust the flow on the site, there is no electrical connection and the implementation is simple with its multi-position mounting in horizontal or vertical duct.

Crédit photo : gettyimages - 2017

#HealthyLiving

aldes

Constant Airflow Regulator

MR MODULO

ADVANTAGES

- *Just one product per diameter (except for 125 mm) for several airflow ratings.*
- *Tool-free installation and adjustment.*
- *Produced in France.*

RANGE

Designation	References	Discount family	Pack. 1
80			
MR MODULO 20-60 m3/h / 9-35.5 CFM	11016307	***11***	32
100			
MR MODULO 15-90 m3/h / 10-52.5 CFM	11016308	***11***	36
125			
MR MODULO 15-90 m3/h / 10-50 CFM	11016309	***11***	36
MR MODULO 100-190 m3/h / 60-115 CFM	11016310	***11***	24
150			
MR MODULO 100-240 m3/h / 60-140 CFM	11016311	***11***	36
160			
MR MODULO 100-240 m3/h / 60-140 CFM	11016312	***11***	36
200			
MR MODULO 225-400 m3/h / 132.5-235 CFM	11016313	***11***	12
250			
MR MODULO 300-650 m3/h / 175-385 CFM	11016314	***11***	8

DESCRIPTION

- Plastic body (M1 fire rating class) housing the silicone control membrane in a calibrated passage.
- Support and air tightness provided by peripheral double-lip elastomer seal.
- Airflow tolerance: - Q average = Q nominal +/- 5 m3/h for MR ≤ 50 m3/h, - Q average = Q max +/- 10 % for MR > 50 m3/h.
- Operating temperature: -10 °C / +60 °C.
- Certification: UL.

FIELD OF APPLICATION

- Airflow control at predetermined value whatever the change in pressure.
- For circular ductwork.
- Ventilation and air conditioning systems.
- Air exhaust and air supply.
- Operating range between 50 and 250 Pa. (except D80, D100 and D125 : 50-200 Pa.)

INSTALLATION

- Manual setting (without any tool) of the desired airflow by removing or not the wedge an by turning the rotative ring.
- Fitted directly in a circular duct or a standard accessory connection.
- Airflow stabilisation distance:
- exhaust applications: 1 Ø between the terminal and the MR positioned downstream,
- air supply applications: 3 Ø between the MR positioned upstream and the terminal.
- Horizontal or vertical installation, membrane does not require specific orientation.
- Product markings: airflow direction, nominal diameter, article code, traceability, correspondence table (airflow in function of the ring+wedge).

DIMENSIONS (MM)

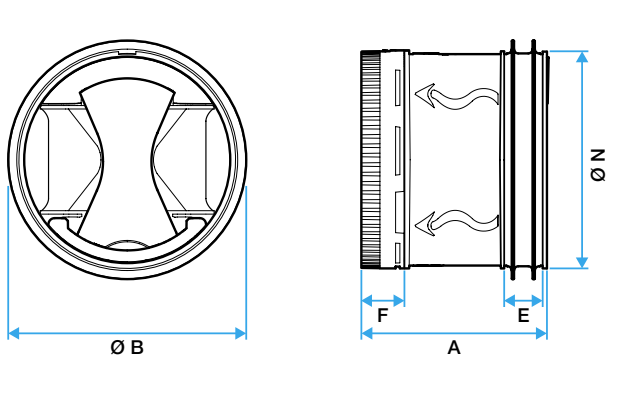

Nominal Ø duct (mm)	Ø N (mm)	Ø B (mm)	A (mm)	Airflow range (m^3/h)	F (mm)
80	76	85	65	20-60	15
100	92	105	70	15-90	13
125 - 15-90 m^3/h	116	132	70	15-90	13
125 - 100-190 m^3/h	116	132	110	100-190	17
150	147	153	118	100-240	19
160	153	167	118	100-240	19
200	190	210	144	225-400	23
250	238	262	180	300-650	26

MR MONO

Reliable, silent and tool-free airflow control.

ADVANTAGES

- *For insertion into connections.*
- *PVC-free.*
- *Maintenance-free*
- *Produced in France.*

DESCRIPTION

- Plastic body (M1 fire rating class) housing the silicone control membrane in a calibrated passage.
- Support and air tightness provided by peripheral double-lip elastomer seal.
- Airflow tolerance inside operating pressure range: - Q average = Q nominal +/- 5 m3/h for MR ≤ 50 m3/h, - Q average = Q max +/- 10 % for MR > 50 m3/h.
- Operating temperature: -10 °C / +60 °C.
- Certification: UL.

FIELD OF APPLICATION

- Airflow control at predetermined value whatever the change in pressure.
- For circular ductwork.
- Ventilation and air conditioning systems.
- Air exhaust and air supply.
- Operating range: - standard range: between 50 to 250 Pa. - high pressure range: between 150 to 650 Pa. (except D80, D100 and D125 : 50-200 Pa.)

INSTALLATION

- Fitted directly in a circular duct or a standard accessory connection.
- Airflow stabilisation distance: - exhaust applications: 1 Ø between the terminal and the MR positioned downstream,
- air supply applications: 3 Ø between the MR positioned upstream and the terminal.
- Horizontal or vertical installation, membrane does not require specific orientation.
- Product markings: airflow direction, nominal diameter, article code, traceability, nominal airflow.

DIMENSIONS (MM)

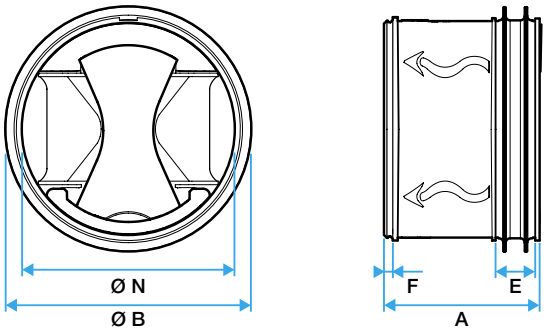

Nominal Ø duct (mm)	Ø N (mm)	Ø B (mm)	A (mm)	E (mm)	F (mm)
80	76	85	53	14	3
100	92	105	61	14	4
125 15 - 95 m³/h	116	132	61	14	4
125 100 - 160 m³/h	116	132	97	14	4
150	147	153	103	14	4
160	153	167	103	14	4
200	190	210	128	20	7
250	238	262	159	20	5

Constant Airflow Regulator

MR MONO STANDARD

RANGE

Ø	Designation	References
80		
80	MR MONO Ø 80 - 15 m³/h	11016226
80	MR MONO Ø 80 -20 m³/h	11016227
80	MR MONO Ø 80 - 25 m³/h	11016228
80	MR MONO Ø 80 - 30 m³/h	11016229
80	MR MONO Ø 80 - 35 m³/h	11016230
80	MR MONO Ø 80 - 40 m³/h	11016231
80	MR MONO Ø 80 - 45 m³/h	11016232
80	MR MONO Ø 80 - 50 m³/h	11016233
80	MR MONO Ø 80 - 60 m³/h	11016234
100		
100	MR MONO Ø 100 - 15 m³/h	11016235
100	MR MONO Ø 100 - 20 m³/h	11016236
100	MR MONO Ø 100 - 25 m³/h	11016237
100	MR MONO Ø 100 - 30 m³/h	11016238
100	MR MONO Ø 100 - 35 m³/h	11016239
100	MR MONO Ø 100 - 40 m³/h	11016240
100	MR MONO Ø 100 - 45 m³/h	11016241
100	MR MONO Ø 100 - 50 m³/h	11016242
100	MR MONO Ø 100 - 55 m³/h	11016243
100	MR MONO Ø 100 - 60 m³/h	11016244
100	MR MONO Ø 100-65 m³/h	11016245
100	MR MONO Ø 100-70 m³/h	11016246
100	MR MONO Ø 100-75 m³/h	11016247
100	MR MONO Ø 100 - 80 m³/h	11016248
100	MR MONO Ø 100 - 85 m³/h	11016249
100	MR MONO Ø 100 - 90 m³/h	11016250

Ø	Designation	References
125		
125	MR MONO Ø 125 - 15 m³/h	11016251
125	MR MONO Ø 125 - 25 m³/h	11016252
125	MR MONO Ø 125 - 30 m³/h	11016253
125	MR MONO Ø 125 - 45 m³/h	11016254
125	MR MONO Ø 125 - 50 m³/h	11016255
125	MR MONO Ø 125 - 60 m³/h	11016256
125	MR MONO Ø 125 - 65 m³/h	11016257
125	MR MONO Ø 125 - 70 m³/h	11016258
125	MR MONO Ø 125 - 75 m³/h	11016259
125	MR MONO Ø 125 - 80 m³/h	11016260
125	MR MONO Ø 125 - 85 m³/h	11016261
125	MR MONO Ø 125 - 90 m³/h	11016262
125	MR MONO Ø 125 - 95 m³/h	11016263
125	MR MONO Ø 125 - 100 m³/h	11016264
125	MR MONO Ø 125 - 105 m³/h	11016265
125	MR MONO Ø 125 - 110 m³/h	11016266
125	MR MONO Ø 125 - 115 m³/h	11016267
125	MR MONO Ø 125 - 120 m³/h	11016268
125	MR MONO Ø 125 - 125 m³/h	11016269
125	MR MONO Ø 125 - 130 m³/h	11016270
125	MR MONO Ø 125 - 140 m³/h	11016271
125	MR MONO Ø 125 - 150 m³/h	11016272
125	MR MONO Ø 125 - 160 m³/h	11016273
125	MR MONO Ø 125 - 190 m³/h	11016274

Ø	Designation	References
150		
150	MR MONO Ø 150 - 110 m³/h	11016275
150	MR MONO Ø 150 - 130 m³/h	11016276
150	MR MONO Ø 150 - 150 m³/h	11016277
150	MR MONO Ø 150 - 170 m³/h	11016278
150	MR MONO Ø 150 - 210 m³/h	11016279
150	MR MONO Ø 150 - 240 m³/h	11016280
160		
160	MR MONO Ø 160 - 120 m³/h	11016281
160	MR MONO Ø 160 - 130 m³/h	11016282
160	MR MONO Ø 160 - 140 m³/h	11016283
160	MR MONO Ø 160 - 150 m³/h	11016284
160	MR MONO Ø 160 - 160 m³/h	11016285
160	MR MONO Ø 160 - 170 m³/h	11016286
160	MR MONO Ø 160 - 180 m³/h	11016287
160	MR MONO Ø 160 - 190 m³/h	11016288
160	MR MONO Ø 160 - 200 m³/h	11016289
160	MR MONO Ø 160 - 210 m³/h	11016290
160	MR MONO Ø 160 - 240 m³/h	11016291
200		
200	MR MONO Ø 200 - 200 m³/h	11016292
200	MR MONO Ø 200 - 225 m³/h	11016293
200	MR MONO Ø 200 - 250 m³/h	11016294
200	MR MONO Ø 200 - 275 m³/h	11016295
200	MR MONO Ø 200 - 300 m³/h	11016296
200	MR MONO Ø 200 - 325 m³/h	11016297
200	MR MONO Ø 200 - 350 m³/h	11016298
200	MR MONO Ø 200 - 400 m³/h	11016299

Ø	Designation	References
250		
250	MR MONO Ø 250 - 300 m³/h	11016300
250	MR MONO Ø 300 - 350 m³/h	11016301
250	MR MONO Ø 350 - 400 m³/h	11016302
250	MR MONO Ø 250 - 450 m³/h	11016303
250	MR MONO Ø 250 - 500 m³/h	11016304
250	MR MONO Ø 250 - 550 m³/h	11016305
250	MR MONO Ø 250 - 650 m³/h	11016306

MR MONO HIGH PRESSURE

RANGE

Ø	Designation	References
125		
125	MR MONO HP Ø 125 - 110 m3/h	11016071
125	MR MONO HP Ø 125 - 150 m³/h	11016072
125	MR MONO HP Ø 125 - 200 m³/h	11016073
125	MR MONO HP Ø 125 - 240 m³/h	11016074
125	MR MONO HP Ø 125 - 290 m³/h	11016075
150		
150	MR MONO HP Ø 150 - 210 m³/h	11016076
150	MR MONO HP Ø 150 - 260 m³/h	11016077
150	MR MONO HP Ø 150 - 310 m³/h	11016078
150	MR MONO HP Ø 150 - 380 m³/h	11016079

Ø	Designation	References
160		
160	MR MONO HP Ø 160 - 210 m³/h	11016081
160	MR MONO HP Ø 160 - 260 m³/h	11016082
160	MR MONO HP Ø 160 - 310 m³/h	11016083
160	MR MONO HP Ø 160 - 380 m³/h	11016084
200		
200	MR MONO HP Ø 200 - 350 m³/h	11016086
200	MR MONO HP Ø 200 - 440 m³/h	11016087
200	MR MONO HP Ø 200 - 530 m³/h	11016088
200	MR MONO HP Ø 200 - 620 m³/h	11016089
200	MR MONO HP Ø 200 - 700 m³/h	11016090

Ø	Designation	References
250		
250	MR MONO HP Ø 250 - 550 m³/h	11016091
250	MR MONO HP Ø 250 - 600 m³/h	11016092
250	MR MONO HP Ø 250 - 800 m³/h	11016093
250	MR MONO HP Ø 250 - 950 m³/h	11016094
250	MR MONO HP Ø 250 - 1100 m³/h	11016095

Window sleeve for MR

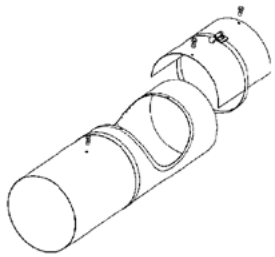

RANGE

Designation	References	Discount family
Window sleeve Ø100 mm	11013121	*03*
Window sleeve Ø125 mm	11013122	*03*

Designation	References	Discount family
Window sleeve Ø150 mm	11013123	*03*
Window sleeve Ø160 mm	11013124	*03*

Designation	References	Discount family
Window sleeve Ø200 mm	11013125	*03*
Windows sleeve Ø250 mm	11013126	*03*

DESCRIPTION

- Used to remove the MR for maintenance.

Constant Airflow Regulator

MR MAX

ADVANTAGES

- *External airflow control.*
- *Large diameter, high airflow, high pressure.*
- *Insulated version.*

RANGE

Designation	References	Discount family
MR MAX Ø80	11016389	***11***
MR MAX Ø100	11016390	***11***
MR MAX Ø125	11016391	***11***
MR MAX Ø160	11016392	***11***
MR MAX Ø200	11016393	***11***
MR MAX Ø250	11016394	***11***
MR MAX Ø315	11016395	***11***
MR MAX Ø400	11016396	***11***
MR MAX Ø 100 MOTORISABLE	11016216	***11***
MR MAX Ø 160 MOTORISABLE	11016217	***11***
MR MAX Ø 80 MOTORISABLE	11016215	***11***

DESCRIPTION

- Galvanised steel plate body
- Male connection with crimped joints.
- Airflow tolerance:

- Q average = Q nominal +/- 10 m3/h for Q nominal ≤ 100 m3/h,
- Q average = Q nominal +/- 10 % for Q nominal > 100 m3/h.

- Operating temperature: -30 °C / +100 °C.
- Product leakage: Class C.
- VDI 60200 compliance.
- Insulated version available on demand.

FIELD OF APPLICATION

- Airflow control at predetermined value whatever the change in pressure.
- For circular ductwork.
- Ventilation and air conditioning systems.
- Air exhaust and air supply.
- Operating range up to 1,000 Pa.
- Motorizable version to balance the air supply and air exhaust per apartment in a centralized HRV solution (VEX 500C4, BapSi elec in kitchen extraction, synchronization by double output timer relay).

INSTALLATION

- External adjustment of nominal airflow possible.
- Assembly direction marked on component.
- Can be installed horizontally or vertically.

ACCESSORIES

Designation	References	Discount family	Cond.
Proportional servo motors - no return spring			
LM 230 A	11055051	***10***	21
LM 24 A	11055042	***10***	20

DIMENSIONS (MM)

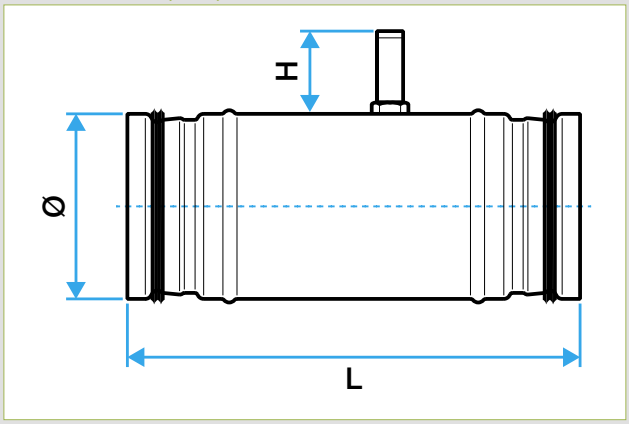

nominal Ø duct (mm)	Airflow range (m^3/h)	L (mm)	H (mm)
80	40 - 125	200	70
100	70 - 220	250	70
125	100 - 280	250	70
160	180 - 500	320	70
200	250 - 900	320	70
250	500 - 1500	320	70
315	800 - 2800	350	110
400	1000 - 4000	420	110

Airflow settings & control, measurement

Motorised control module: RMA

RMA Ø 125 mm

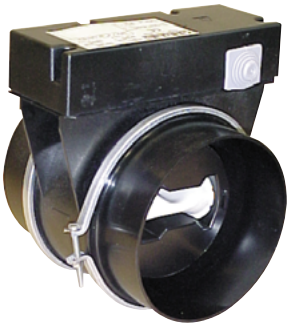

RANGE

Designation	References	Discount family
RMA Ø125 - 15 m³/h 230 V	11016057	***11***
RMA Ø125 - 20 m³/h 230 V	11016474	***11***
RMA Ø125 - 25 m³/h 230 V	11016472	***11***
RMA Ø125 - 30 m³/h 230 V	11016471	***11***
RMA Ø125 - 45 m³/h 230 V	11016475	***11***
RMA Ø125 - 50 m³/h 230 V	11016470	***11***
RMA Ø125 - 60 m³/h 230 V	11016469	***11***
RMA Ø125 - 75 m³/h 230 V	11016468	***11***
RMA Ø125 - 90 m³/h 230 V	11016467	***11***

DESCRIPTION

- M1 class plastic body.
- Silicone control membrane.
- Boost airflow activated by thermal piston.
- Operating range: between 50 and 250 Pa.
- Airflow tolerance:

- Q average = Q nominal +/- 5 m3/h for MR ≤ 50 m3/h,
- Q average = Q nominal +/- 10 % for MR > 50 m3/h.

- Possible to control high airflow by adding an MR upstream. NB:
- Single-piston RMA must not be continuously powered for more than 24 hours.
- Connect their power supply to a timer switch.
- 2-piston RMA: may be continuously powered for over 24 hours only if each piston is not powered for 24 hours consecutively.

FIELD OF APPLICATION

- Air supply and exhaust.
- Dual airflow control (low - high).
- Electrical control.
- Operating temperature: 0°C / +50°C

INSTALLATION

- Inserted directly between two circular ducts.
- Airflow direction indicated on the element.
- Ensure product is accessible.

ACCESSORIES

Designation	References	Discount family
Standard 2-position switch	11022030	***01***
Timer switch 1-hour	11022008	***01***

DIMENSIONS (MM)

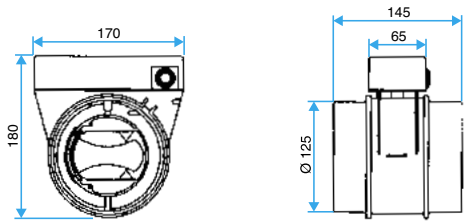

ELECTRICAL DETAILS

Power voltage	Frequency	Power consumed	Protection
230 V AC	50-60 Hz	6 W	2 A
12-24 V AC DC	50-60 Hz	3 W	2 A

AIRFLOW DETAILS

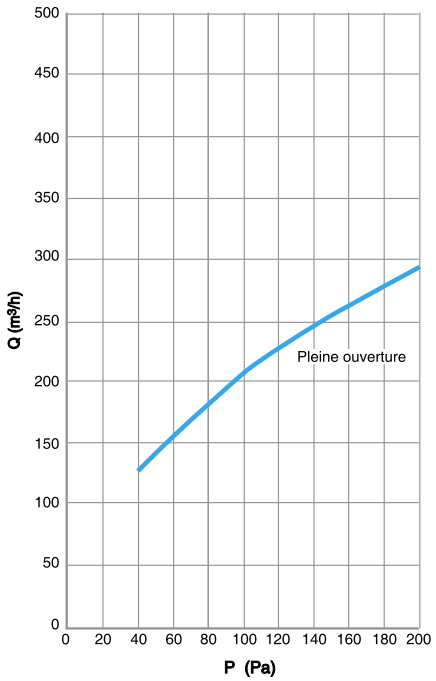

Airflow curves drawn up in accordance with standard NF-X 10.231

RMA Ø 200 mm

RANGE

Designation	References	Discount family
RMA Ø200 - 230 V	11016060	***11***
RMA Ø200 + RCC air supply - 230 V	11016064	***11***

DESCRIPTION

• Low airflows: options available with order:
- 15 - 25 - 30 - 50 - 60 - 75 - 90 - 100 or 130m3/h with Ø 125 mm control sub-assembly.
- 160 - 170 - 190 - 210 or 240 m3/h with Ø 150 mm control sub-assembly.
• Airflow tolerance:
- Q average = Q nominal +/- 5 m3/h for MR ≤ 50 m3/h,
- Q average = Q nominal +/- 10 % for MR > 50 m3/h.
• Possible to control high airflow by adding an MR upstream.
• Single-piston RMA must not be continuously powered for more than 24 hours.
• Connect their power supply to a timer switch.
• Air supply RMA: Ø 200 mm RMA supplied 2 RCC dampers for connection to Ø 150 mm or Ø 125 mm ducts.
• 2-piston RMA: Ø 200 mm RMA can be powered continuously for over 24 hours (only if each piston is not powered for 24 hours consecutively), supplied with 2 RCC for connection to Ø 200 mm or Ø 150 mm or Ø 125 mm ducts.

ACCESSORIES

Designation	References	Discount family
Standard 2-position switch	11022030	***01***
Timer switch 1-hour	11022008	***01***

DIMENSIONS (MM)

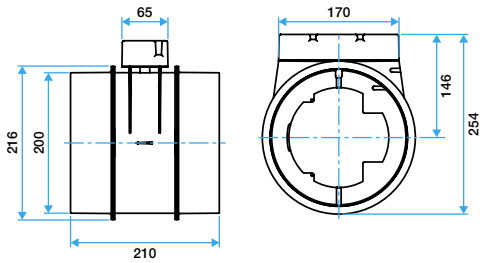

AIRFLOW DETAILS

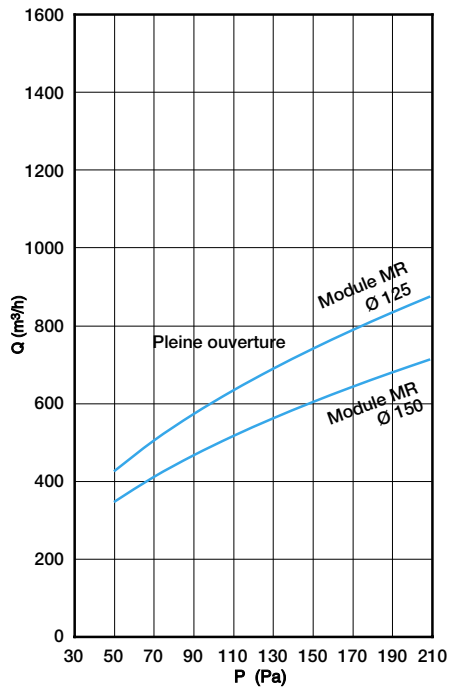

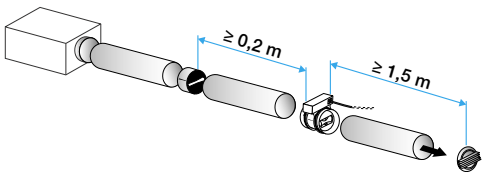

Motorised Plastic Damper: RPM

RANGE

Designation	References	Discount family
RPM Ø200 - 230 V	11016061	***11***
RPM Ø200 -12-24V	11016062	***11***
RPM Ø125 - 230V	11093017	***11***
RPM Ø125 - 12-24 V	11093018	***11***
Accessories		
RCC F/M Ø200 / Ø160	11041935	***17***
Timer switch 1-hour	11022008	***01***

DESCRIPTION

- M1 class plastic body.
- Flap operated by thermal piston.

FIELD OF APPLICATION

- Isolation of a branch using motor-driven damper.
- Operating temperatures: - 0° C / + 50° C.

INSTALLATION

- Inserted directly between two circular ducts.
- Airflow direction indicated on the damper.
- Operating pressure P<200 Pa.
- RPM should not be power supplied more than 24 hours in a row.
- Connect with a delayed relay like 11022008 (1 hour)

ELECTRICAL FEATURES

Supply voltage	Power supply frequency	Power consumption	Protection
230 V AC	50-60 Hz	6 W	2 A
12 V AC DC	50-60 Hz	3 W	2 A

ELECTICAL CONNECTION

- The electrical connection will be made with cable of section Ø 0.75 mm2 per conductor.
- Remove the cover by unscrewing the 4 screws.
- Run the cable through the wire tunnel of the cover.
- Connect the power supply wires with the connection rail.
- Fix the power supply cable with the cable holder and close the cover.

Rectangular volume control dampers: CRGN

ADVANTAGES

- *Class B air tightness in accordance with EN 1751*
- *Class C product available on demand*
- *Made in France*

RANGE

L	H	References	Discount family
200-1200	200-1200	11055203	***10***

- L x H dimensions = 200 x 200 to 1200 x 1200 in increments of 50 mm.

DESCRIPTION

- Rectangular damper made of galvanised steel.
- Width: blade = 100 mm, frame = 130 mm.
- Driven by toothed wheels outside airflow (opposite displacement).
- Supplied with bare shaft with position indicator and locking screw.
- Accessories and motor: see corresponding page.
- Class B air tightness in accordance with EN 1751.
- Class C air tightness available on demand.

FIELD OF APPLICATION

- Used to adjust airflow / pressure on ventilation / air conditioning systems.
- Operating range: - 20° C / + 80° C.
- Admissible speed up to 10 m/s.

ACCESSORIES

Designation	References	Discount family
Manual control handle	11055205	***10***

DIMENSIONS (MM)

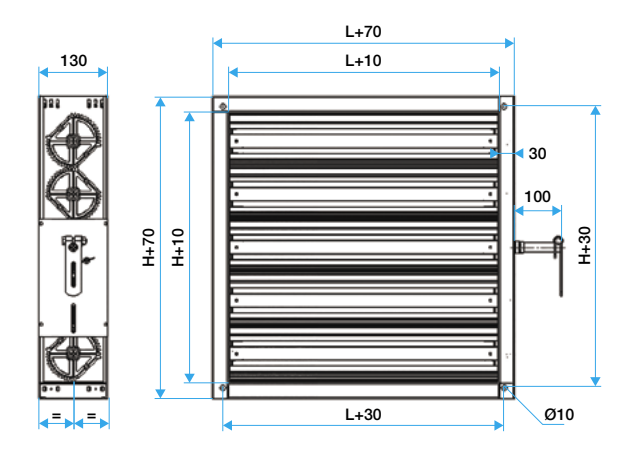

Rectangular isolation dampers: CRGE 100

ADVANTAGES

- *Class B air tightness in accordance with EN 1751*
- *Class C product available on demand*
- *Made in France*

RANGE

L	H	References
Range with choice of options		
200-1200	200-1200	11055204

• All possible dimensions of L x H: 200 x 200 to 1200 x 1200 in increments of 50 mm in L and H.

DESCRIPTION

- Rectangular damper made of galvanised steel.
- Aeraulic air tightness enhanced by seals on blades and frame: class 3 air tightness in accordance with EN 1751 up to 1500 Pa.
- Class B air tightness in accordance with EN 1751.
- Class C air tightness available on demand.
- Width: blade = 100 mm, frame = 130 mm.
- Driven by toothed wheels outside airflow (opposite displacement).
- Accessories and motor: see corresponding page.

FIELD OF APPLICATION

- Isolation of a rectangular or circular ductwork branch (Ø 630 mm, with adapter piece) on ventilation / air conditioning systems.
- Operating range: - 20° C / + 80° C.
- Admissible speed up to 10 m/s.

ACCESSORIES

Designation	References	Discount family
Manual control handle	11055205	***10***

DIMENSIONS (MM)

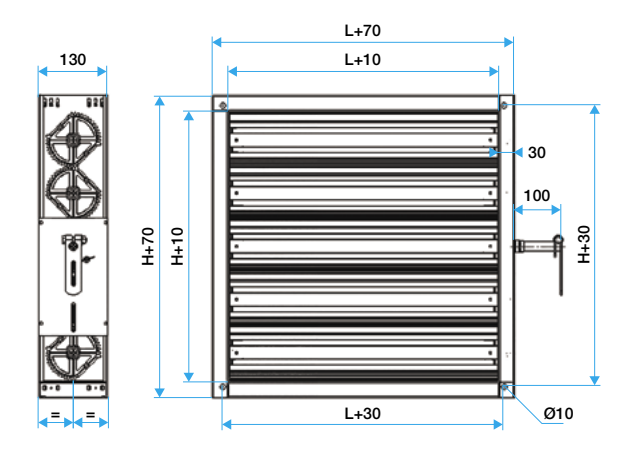

RG / RG with seal / RGP with seal dampers

RG

RG with seal

RGP with seal

RANGE

Ø	References	Discount family
RG		
80	11094439	***22***
100	11094440	***22***
125	11094441	***22***
160	11094442	***22***
200	11094443	***22***
250	11094444	***22***
315	11094445	***22***
355	11094446	***22***
400	11094447	***22***
450	11094448	***22***
500	11094449	***22***
560	11094450	***22***
630	11094451	***22***

Ø	References	Discount family
RG with seal		
125	11098441	***22***
160	11098442	***22***
200	11098443	***22***
250	11098444	***22***
315	11098445	***22***
355	11098446	***22***
400	11098447	***22***
450	11098448	***22***
500	11098449	***22***
560	11098450	***22***

Ø	References	Discount family
RGP with seal		
125	11094581	***22***
160	11094582	***22***
200	11094583	***22***
250	11094584	***22***
315	11094585	***22***
355	11094586	***22***
400	11094587	***22***
450	11094588	***22***
500	11094589	***22***
560	11094590	***22***
630	11094591	***22***

DESCRIPTION

- Body and diaphragms made of galvanised steel.
- M1 lexan shafts up to Ø 315 and zamak from Ø 355 to Ø 630.
- Screw adjustable handle.
- The upper jumper allows an external insulation.
- For RG with seal and RGP with seal : Double-lip air tightness seal on each junction < Ø355 mm.
  - For diameters > 355 mm, motor option is available with adapter plate (11055122). For motors, please see motors and accessories pages.
- Beyond Ø 630 mm, for reasons of mechanical resistance, provide for a CRG type volume control damper with connecting plates of the same diameter as the ductwork.

FIELD OF APPLICATION

- RG: pressure setting in ductwork branches.
- RGP: offers finest pressure setting thant a standard damper; avoids full closure.
- RG with seal up to D315: Class D air tightness in accordance to EN 1751. Others: Class C.

Iris damper

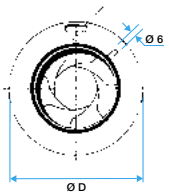

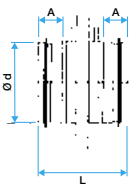

RANGE

Ø A	References	Discount family
100	11055090	***10***
125	11055091	***10***
160	11055092	***10***
200	11055093	***10***
250	11055094	***10***
315	11055095	***10***
400	11055096	***10***
500	11055097	***10***
630	11055098	***10***

DESCRIPTION

- Iris damper enabling precise adjustment of diaphragm using hexagonal nut.
- Lip seals on connection sleeves.
- Adjustment tolerance on airflow of +/- 10%.
- Class C air tightness in accordance to EN 1751.

FIELD OF APPLICATION

- Enables fine adjustment of the airflow in a ductwork branch.
- Built-in airflow / pressure measurement inlets (Ø 6 mm): measurement devices (see on page *Measurement Devices*).
- Operating range: -20°C / +80°C

Circular shut-off dampers : RGE with seal

RGE manual < Ø355

RGE > Ø315

RGE with motor plate < Ø355

RANGE

Ø	References	Discount family
MANUAL < Ø355		
100	11055210	***10***
125	11055211	***10***
160	11055212	***10***
200	11055213	***10***
250	11055214	***10***
315	11055215	***10***
MANUAL > Ø315 (FOR MOTORISATION USE THE MOTOR PLATE KIT)		
355	11055116	***10***
400	11055117	***10***
450	11055118	***10***
500	11055119	***10***
Motor plate kit	11055122	***10***
WITH INTEGRATED MOTOR PLATE (FOR MOTORISATION)		
100	11055216	***10***
125	11055217	***10***
160	11055218	***10***
200	11055219	***10***
250	11055220	***10***
315	11055221	***10***

DESCRIPTION

- Damper air tightness provided by jointed disk (overmoulding on disk providing good long-term resistance).
- Double-lip air tightness seal on each junction.
- RGE: screw-locked adjustment handle. Zamak shafts.
- Upper jumper provides remote insulation without covering handle.
- Motor: diameters from 355 mm, to order adapter plate (11055122) used to mount all types of motors.
- Motor output: 2 N/m for RGE Ø 125 to 200, 4-5 N/m for RGE Ø 250 to 500.
- Beyond Ø 500 mm, for reasons of mechanical resistance, use a CRGE volume control damper with connecting plates of the same Ø as the ductwork.

FIELD OF APPLICATION

- Full isolation of a circular ductwork branch.
- Class 4 upstream/downstream air tightness in accordance with EN 1751 (except diameters < D200: class 3).
- Class D internal/external air tightness in accordance with EN 12337 for diameters < 355 mm (Class C for diameters > 315 mm).
- Manual or motor-controlled adjustment.
- Operating range: 0°C / +120°C

MOUNTING THE MOTOR PLATE (DIAMETERS > Ø355 MM)

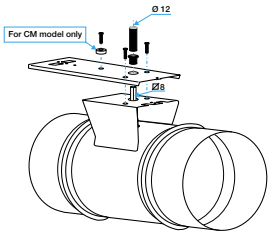

MOUNTING THE MOTOR PLATE

- Remove the plastic handle by unscrewing the screw. Fix the motor plate in position using the screws provided. Fit the Ø 12 mm adapter piece on the square 8 mm shaft. Except for CM models, the motor is mounted on the shaft and fixed to the rear of the plate. For a CM motor, add the spacer to the plate and fix in place using the clip supplied with the motor.

DIMENSIONS: Ø100 TO Ø315 MANUAL (MM)

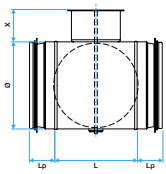

Ø	L	Lp	X
100	88	35	50
125	88	35	50
160	88	35	50
200	88	35	50
250	88	45	50
315	88	45	50

DIMENSIONS: Ø100 TO Ø315 WITH MOTOR PLATE (MM)

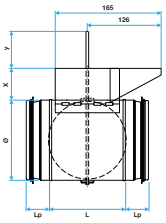

Ø	L	Lp	X	Y
100	88	35	50	56
125	88	35	50	67
160	88	35	50	81
200	88	35	50	70
250	88	45	50	52
315	88	45	50	70

Motors and accessories

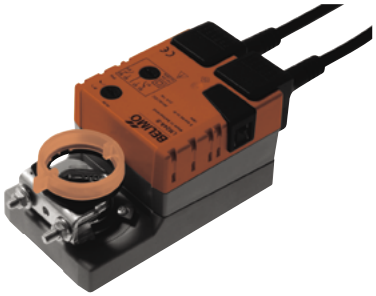

RANGE

Designation	References	Discount family
Proportional servo motors - with return spring		
LF 24 SR	11055054	***10***
SF 24 SR	11055067	***10***
Proportional servo motors - no return spring		
LM 230A SR	11055052	***10***
LM 24A SR	11055053	***10***
NM 230A SR	11055055	***10***
NM 24A SR	11055066	***10***
SM 230A SR	11055068	***10***
SM 24A SR	11055069	***10***
On/Off servo motors - with return spring		
Motor SFA TOR WITHOUT SPRING	11055045	***10***
TF 230	11055049	***10***
TF 24	11055050	***10***
LF 230	11055081	***10***
LF 24	11055082	***10***
On/Off servo motors - no return spring		
CM 230-L	11055038	***10***
CM 24-L	11055040	***10***
LM 24 A	11055042	***10***
LM 230 A	11055051	***10***
SM 24 A	11055044	***10***
NM 230 A	11055061	***10***
NM 24 A	11055062	***10***

DESCRIPTION

- Motors covering torques from 2 Nm to 20 Nm.
- Full opening in On/Off mode or partial opening in Proportional mode.
- Safety function: return spring
- Data reporting: motors have contacts.
- CM motors: no possibility of contacts. Left rotation.
- All type F motors have a reversible drive nut if the shaft is too short.
- Type 24 motors: 24 V AC/DC.
- Type 230 motors: 230 V AC

FIELD OF APPLICATION

- Motors and adjustment of CRG and RG dampers
- Choice of motor according to torque, total or controlled opening/closure, safety function and data reporting.

Type of damper	Max. surface (pressure < 250 Pa)	Type of motor	Torque (Nm)	Shaft Ø (mm)	Shaft R (mm)
All RG RGE Ø 125 to Ø 200	0.4	CM 230 & CM 24	2	6 to 12	6 to 12
		TF 230 & TF 24			
CRG/CRGE RGE Ø 250 to Ø 450	0.8	LM 230A & LM 24A	5	8 to 16	8 to 16
		LM 230A SR & LM 24A SR			
		LF 230 & LF 24	4		
		LF 24 SR			
CRG/CRGE RGE Ø 250 to Ø 500	From 0,8 to 2	NM 230 & NM 24A	10	8 to 20	8 to 20
		NM 230A SR & NM 24A SR			
CRG/CRGE	From 2 to 4	SM 24A SM 230A SR & SM 24A SR	20	10 to 20	10 to 20
		SF 230 A-S2 & SF 24 A-S2			

Electronic precision micro-pressure gauge

ADVANTAGES

- *Ideal for expert assessments and precise adjustments.*
- *Easy to use for on-site measurements and adjustments.*
- *Produced in France.*

RANGE

Designation	References	Discount family
Supplied in case, ready to use with 9V battery and 2 pressure inlet tubes.		
Precision micro-pressure gauge and case	11090027	***10***

DESCRIPTION

- Numerical pressure display in Pa.
- Accurate to: 1 Pa over a range of 0-1000 Pa. COFRAC calibration certificate.
- Can be used in negative pressure, over pressure or differential pressure.
- Functions include manual/auto reset, hold, min-max values, auto-shutdown.

FIELD OF APPLICATION

- Precise pressure measurement on ventilation and air conditioning systems.

Electronic pressure gauge

ADVANTAGES

- *Ideal for measurements concerning annual inspections of CMEV / gas CMEV systems.*
- *Practical and easy to use.*
- *Produced in France.*

RANGE

Designation	References	Discount family	Pack. 1
Supplied ready to use with 9V battery and 2 pressure inlet tubes.			
Electronic pressure gauge	11090007	***10***	10

DESCRIPTION

- Numerical pressure display in Pa.
- Accurate to: +/-20 Pa on a range of -9800/+9800 Pa.
- Functions include manual/auto reset, hold, min-max values, auto-shutdown, back lighting.
- Supplied with Pitot tube, 2 x 1 m of tube, stainless steel end piece, carrying bag.

FIELD OF APPLICATION

- Pressure measurement on ventilation and air conditioning systems.

Circular ducts

PRODUCT ADVANTAGES

- *Core range available in stock throughout France.*
- *Entire range manufactured in France.*
- *Galvanisation and thickness compliant with quality standards.*
- *Ridged tubes with smooth end pieces to ensure airtightness of rigid connections.*

COMPLIANCE

- *A1 fire resistance classification as per Order of 21 November 2002.*
- *Ducts compliant with standards:*
  - *NF EN 1506.*
  - *NF EN 12 237.*
- *Galvanised steel Z 275 compliant with standard EN 10346 ensuring the regularity of the coating.*

RANGE

Ø	Reference	Discount family	Pack.
Standard bar BS 3 m			
80	11091241	***22***	6
100	11091242	***22***	6
125	11091243	***22***	78
160	11091245	***22***	40
200	11091246	***22***	28
250	11091247	***22***	15
315	11091248	***22***	8
355	11091249	***22***	6
400	11091250	***22***	6
450	11091256	***22***	6
500	11091251	***22***	6
560	11091257	***22***	6
630	11091252	***22***	6
710	11091258	***22***	-
800	11091253	***22***	-
900	11091281	***22***	-

Ø	Reference	Discount family	Pack.
Storey element EE 2.47 m			
125	11091223	***22***	72
160	11091225	***22***	40
200	11091226	***22***	28
250	11091227	***22***	15
315	11091228	***22***	8
355	11091229	***22***	-
400	11091230	***22***	-
450	11091236	***22***	-
500	11091231	***22***	-
560	11091233	***22***	-
630	11091232	***22***	-

FIELD OF APPLICATION

- All air distribution ductwork.
- Standard storey elements (2.47 m), designed for use as shafts in collective housing, ideally couple with CRE storey collectors and enable faster assembly.

INSTALLATION

- Easy to assemble using interlocking parts: ducts are female, accessories are male.
- Held in place using collars, perforated strips, rails, etc. (see page Installation accessories).

Male connector: RM

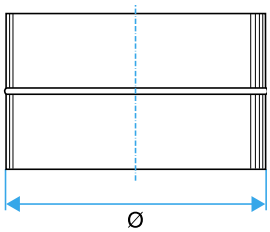

RANGE

Ø	Reference	Discount family	Pack.
80	11093041	***22***	100
100	11093042	***22***	107
125	11093043	***22***	90
160	11093045	***22***	55
200	11093046	***22***	57
250	11093047	***22***	24

Ø	Reference	Discount family	Pack.
315	11093048	***22***	12
355	11093049	***22***	8
400	11093050	***22***	42
450	11093051	***22***	6
500	11093052	***22***	23
560	11094130	***22***	6

Ø	Reference	Discount family	Pack.
630	11093053	***22***	6
710	11094131	***22***	-
800	11093054	***22***	-
900	11094132	***22***	-

FIELD OF APPLICATION

- Used to connect two ducts together.

INSTALLATION

- Easy to assemble using interlocking parts: ducts are female, accessories are male.
- Airtightness achieved by sealant and/or adhesive tape.
- Fixed to duct using self-tapping screws (4 to 6 depending on the diameter).

Female connector: RF

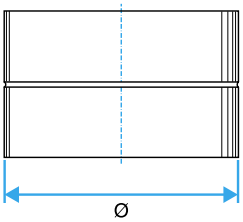

RANGE

Ø	Reference	Discount family	Pack.
80	11093061	***22***	
100	11093062	***22***	101
125	11093063	***22***	90
160	11093065	***22***	50
200	11093066	***22***	54
250	11093067	***22***	24

Ø	Reference	Discount family	Pack.
315	11093068	***22***	10
355	11093069	***22***	18
400	11093070	***22***	22
450	11093071	***22***	-
500	11093072	***22***	-
560	11094135	***22***	-

Ø	Reference	Discount family	Pack.
630	11093073	***22***	-
710	11094136	***22***	-
800	11093074	***22***	-
900	11094137	***22***	-

FIELD OF APPLICATION

- Used to connect two accessories together.

INSTALLATION

- Easy to assemble using interlocking parts: RF are female, accessories are male.

Rigid galvanised ductwork

Galvanised elbows

90° elbow

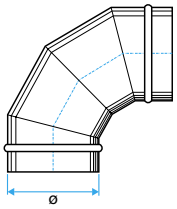

RANGE

Ø	Reference	Discount family	Pack.
Stamped elbow			
80	11093380	***22***	85
100	11093381	***22***	110
125	11093382	***22***	135
160	11093383	***22***	65
200	11093384	***22***	40

Ø	Reference	Discount family	Pack.
Sector elbow			
250	11093385	***22***	18
315	11093308	***22***	8
355	11093309	***22***	6
400	11093310	***22***	4
450	11093311	***22***	2

Ø	Reference	Discount family	Pack.
500	11093312	***22***	2
560	11094110	***22***	-
630	11093313	***22***	-
710	11094111	***22***	-
800	11093314	***22***	-
900	11094112	***22***	-

FIELD OF APPLICATION

- Used to change the direction of ductwork by 90°.

INSTALLATION

- Easy to assemble using interlocking parts: ducts are female, accessories are male.
- Stamped elbows up to Ø 200.
- Sector elbows from Ø 250 to Ø 900.

45° elbow

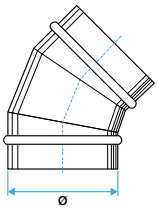

RANGE

Ø	Reference	Discount family	Pack.
Stamped elbow			
80	11093387	***22***	90
100	11093388	***22***	90
125	11093389	***22***	-
160	11093390	***22***	115
200	11093391	***22***	72

Ø	Reference	Discount family	Pack.
Sector elbow			
250	11093392	***22***	32
315	11093348	***22***	15
355	11093349	***22***	12
400	11093350	***22***	8
450	11093351	***22***	4

Ø	Reference	Discount family	Pack.
500	11093352	***22***	3
560	11094120	***22***	-
630	11093353	***22***	-
710	11094121	***22***	-
800	11093354	***22***	-
900	11094122	***22***	-

FIELD OF APPLICATION

- Used to change the direction of ductwork by 45°.

INSTALLATION

- Easy to assemble using interlocking parts: ducts are female, accessories are male.
- Stamped elbows up to Ø 200.
- Sector elbows from Ø 250 to Ø 900.

30° elbow

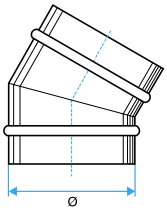

RANGE

Ø	Reference	Discount family
Stamped elbow		
80	11093096	***22***
100	11093097	***22***
125	11093098	***22***
160	11093099	***22***
200	11093100	***22***

Ø	Reference	Discount family
Sector elbow		
250	11093367	***22***
315	11093368	***22***
355	11093369	***22***
400	11093370	***22***
450	11093371	***22***
500	11093372	***22***

Ø	Reference	Discount family
560	11094125	***22***
630	11093373	***22***
710	11094126	***22***
800	11093374	***22***
900	11094127	***22***

FIELD OF APPLICATION

- Used to change the direction of ductwork by 30°.

INSTALLATION

- Easy to assemble using interlocking parts: ducts are female, accessories are male.
- Stamped elbows up to Ø 200.
- Sector elbows from Ø 250 to Ø 900.

Concentric Conical Reduction: RCC

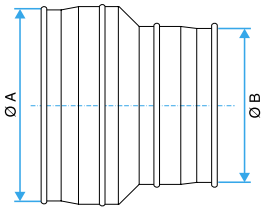

RANGE

Ø A	Ø B	Reference	Discount family	Pack.
Ø to 100				
100	80	11093500	***22***	84
Ø to 125				
125	80	11093502	***22***	63
125	100	11093501	***22***	63
Ø to 160				
160	80	11093505	***22***	60
160	100	11093504	***22***	75
160	125	11093503	***22***	75
Ø to 200				
200	100	11093508	***22***	52
200	125	11093507	***22***	56
200	160	11093506	***22***	80
Ø to 250				
250	125	11093511	***22***	30
250	160	11093510	***22***	32
250	200	11093509	***22***	32
Ø to 315				
315	160	11093514	***22***	24
315	200	11093513	***22***	26
315	250	11093512	***22***	26
Ø to 355				
355	200	11093518	***22***	-
355	250	11093517	***22***	7
355	315	11093516	***22***	8
Ø to 400				
400	200	11093524	***22***	-
400	250	11093523	***22***	30
400	315	11093522	***22***	35
400	355	11093521	***22***	40

Ø A	Ø B	Reference	Discount family	Pack.
Ø to 450				
450	250	11094672	***22***	-
450	315	11094671	***22***	-
450	355	11094670	***22***	-
450	400	11093548	***22***	20
Ø to 500				
500	250	11093530	***22***	-
500	315	11093529	***22***	-
500	355	11093528	***22***	-
500	400	11093527	***22***	17
500	450	11093547	***22***	13
Ø to 560				
560	315	11094067	***22***	-
560	355	11094066	***22***	-
560	400	11094065	***22***	-
560	450	11094064	***22***	-
560	500	11094063	***22***	-
Ø to 630				
630	315	11093537	***22***	-
630	355	11093536	***22***	-
630	400	11093535	***22***	-
630	450	11093546	***22***	-
630	500	11093534	***22***	-
630	560	11094669	***22***	-
Ø to 710				
710	400	11094072	***22***	-
710	450	11094071	***22***	-
710	500	11094070	***22***	-
710	560	11094069	***22***	-
710	630	11094068	***22***	-

Ø A	Ø B	Reference	Discount family	Pack.
Ø to 800				
800	400	11093942	***22***	-
800	450	11093943	***22***	-
800	500	11093941	***22***	-
800	560	11094074	***22***	-
800	630	11093940	***22***	-
800	710	11094073	***22***	-
Ø to 900				
900	500	11093945	***22***	-
900	560	11093944	***22***	-
900	630	11094077	***22***	-
900	710	11094076	***22***	-
900	800	11094075	***22***	-

FIELD OF APPLICATION

- Used to connect two ducts with different diameters.

INSTALLATION

- Easy to assemble using interlocking parts: ducts are female in design, the accessories are male.

Concentric Flat Reduction: RPC

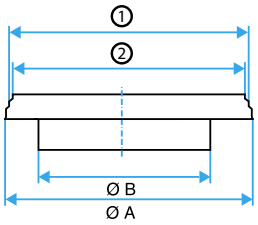

RANGE

Ø A	Ø B	Reference	Discount family	Pack.
Ø to 125				
125	80	11093452	***22***	50
Ø to 160				
160	80	11093455	***22***	-
160	100	11093454	***22***	-
160	125	11093453	***22***	30
Ø to 200				
200	100	11093458	***22***	-
200	125	11093457	***22***	25
200	160	11093456	***22***	30
Ø to 250				
250	125	11093461	***22***	15
250	160	11093460	***22***	15
250	200	11093459	***22***	15
Ø to 315				
315	125	11093465	***22***	-
315	160	11093464	***22***	20
315	200	11093463	***22***	35
315	250	11093462	***22***	35
Ø to 355				
355	125	11093470	***22***	-
355	160	11093469	***22***	-
355	200	11093468	***22***	20
355	250	11093467	***22***	20
355	315	11093466	***22***	-

Ø A	Ø B	Reference	Discount family	Pack.
Ø to 400				
400	125	11093476	***22***	-
400	160	11093475	***22***	-
400	200	11093474	***22***	-
400	250	11093473	***22***	50
400	315	11093472	***22***	50
400	355	11093471	***22***	-
Ø to 450				
450	125	11093829	***22***	-
450	160	11093828	***22***	-
450	200	11093827	***22***	-
450	250	11094675	***22***	-
450	315	11093498	***22***	12
450	355	11093497	***22***	-
450	400	11093496	***22***	-
Ø to 500				
500	125	11093483	***22***	-
500	160	11093482	***22***	-
500	200	11093481	***22***	-
500	250	11093480	***22***	-
500	315	11093479	***22***	-
500	355	11093478	***22***	-
500	400	11093477	***22***	-
500	450	11093493	***22***	-

Ø A	Ø B	Reference	Discount family	Pack.
Ø to 560				
560	125	11093938	***22***	-
560	160	11093937	***22***	-
560	200	11093936	***22***	-
560	250	11093935	***22***	-
560	315	11093934	***22***	-
560	355	11093933	***22***	-
560	400	11093932	***22***	-
560	450	11093931	***22***	-
560	500	11093930	***22***	-
Ø to 630				
630	125	11093491	***22***	-
630	160	11093490	***22***	-
630	200	11093489	***22***	-
630	250	11093488	***22***	-
630	315	11093487	***22***	-
630	355	11093486	***22***	-
630	400	11093485	***22***	-
630	450	11093495	***22***	-
630	500	11093484	***22***	-
630	560	11093451	***22***	-

FIELD OF APPLICATION

- Used to interconnect two different diameters of ducts over a minimum possible length.
- Not for use on air supply ducts due to the pressure drop generated: use an RCC instead.

INSTALLATION

- Easy to assemble using interlocking parts: ducts are female in design, accessories are male.

Branch connector T-piece (CP): CP and CP2A

PRODUCT ADVANTAGES

• Exclusive CP2A (Aldes patent):
- 35 % less pressure drops than a standard CP,
- improved acoustic attenuation: - 3 dB(A) better than a standard CP,
- fan consumes less power,
- shaft remains accessible.

COMPLIANCE

• Compliant with requirements of DTU 68.3 P1-1-2 / 7.4.6.5.1.

RANGE

Ø A	Ø B	Reference	Discount family	Packaging
Standard CP				
125	200	11093609	***22***	30
160	250	11093601	***22***	17
200	315	11093602	***22***	10
250	355	11093603	***22***	5
315	400	11093604	***22***	-
355	500	11093605	***22***	-
400	560	11093628	***22***	-
450	630	11093608	***22***	-
500	630	11093607	***22***	-
CP2A (Acoustic / Aeraulic)				
125	200	11093922	***22***	30
160	250	11093923	***22***	17
200	315	11093924	***22***	10
250	355	11093925	***22***	5
315	400	11093926	***22***	4
355	500	11093927	***22***	-
400	560	11093928	***22***	-
450	630	11093929	***22***	-
500	630	11093947	***22***	-

DESCRIPTION

- Smaller for easier installation.
- Stop-ring on the body maintains the plug in a stable position and limits the risk of leaks.
- CP2A version:
  - acoustics: high-attenuation acoustic foam B-s1,d0,
  - aeraulics: aluminium sheet deflector with tool-free removal.

FIELD OF APPLICATION

- Branch connector T-piece specifically designed for shafts opening into attics or flat roofs, where the flashing is created before the branch connector T-piece is installed (> 95% of cases).
- Equipment compliant with requirements of DTU 68.3: 2013-06 P1-1: "Mechanical Ventilation Systems".
- CP2A Version (aeraulics/acoustics):
  - 35% less pressure drop (-7 Pa at 4 m/s),
  - fan noise attenuation (approx. -7 dB(A)).
- The aeraulic characteristics of the CP2A reduce the negative pressure required for the fan and therefore enable the use of a less powerful fan, which is less noisy and less energy consuming.

TECHNICAL DETAILS

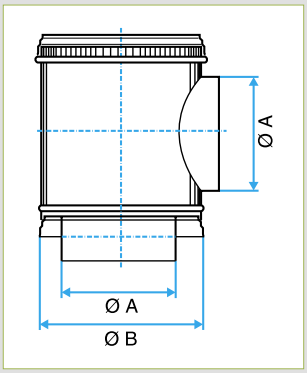

CP

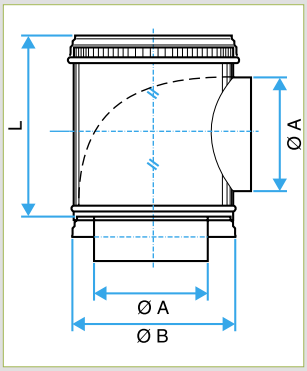

CP2A

Ø A (mm)	Ø B (mm)	W (mm)
125	200	285
160	250	320
200	315	350
250	355	400
315	400	400
355	500	650
400	560	650
450	630	650
500	630	650

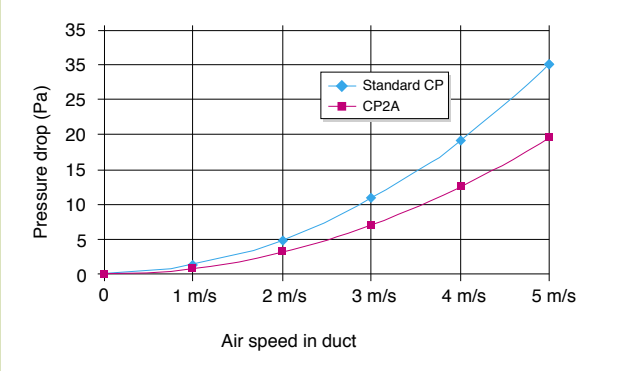

Branch connector T-piece for flashing: CPT and CPT2A

RANGE

Ø A	Ø B	Reference	Discount family
Acoustics/Aeraulics			
125	250	11094860	***22***
160	315	11094861	***22***
200	355	11094862	***22***
250	400	11094863	***22***
315	450	11094864	***22***
355	500	11093927	***22***
400	560	11093928	***22***
450	630	11093929	***22***
500	630	11093947	***22***
Standard			
125	250	11094871	***22***
160	315	11094872	***22***
200	355	11094873	***22***
250	400	11094874	***22***
315	450	11094875	***22***
355	500	11093605	***22***
400	560	11093628	***22***
450	630	11093608	***22***
500	630	11093607	***22***

DESCRIPTION

- Ø B-Ø ≤ 100 mm used to create the flashing on flat roofs.
- 2A version:
  - Acoustics: M1 acoustic foam with high level of sound attenuation.
  - Aeraulics: sheet metal deflector can be removed and installed without tools.
- Stop-ring on the body maintains the plug in a stable position and limits the risk of leaks.
- INSTALLATION page Flat roof penetration sleeve: FT.

FIELD OF APPLICATION

- Specific branch connector T-piece for shafts opening onto flat roofs and where the flashing is created after installing the CPT.
- Equipment compliant with the DTU 68-3 requirements and facilitating the flashing on flat roofs.
- INSTALLATION page Flat roof penetration sleeve: FT.

TECHNICAL DETAILS

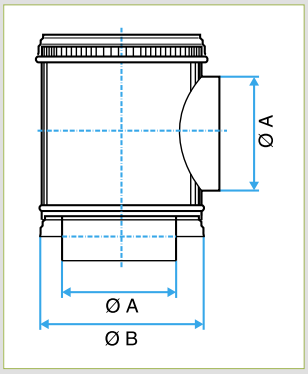

CPT

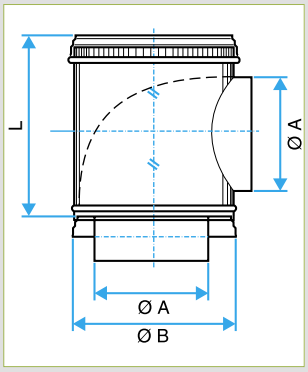

CPT2A

Ø A (mm)	Ø B (mm)	W (mm)
125	250	285
160	315	320
200	355	350
250	400	400
315	450	400
355	500	650
400	560	650
450	630	650
500	630	650

2A deflector for CP and CPT

PRODUCT ADVANTAGES

• Ideal for improving the operation of an existing system:
- considerable reduction in fan-radiated noise.
- increased pressure available at grilles.
- fan consumes less power.

RANGE

Type	Dimensions	Reference	Discount family
CP	125/200	11093878	***22***
CP	160/250	11093879	***22***
CP	200/315	11093880	***22***
CP	250/355	11093881	***22***
CP	315/400	11093882	***22***
CP & CPT	355/500	11093883	***22***
CP & CPT	400/560	11093884	***22***
CP & CPT	450/630	11093885	***22***
CP & CPT	500/630	11093886	***22***
CPT	125/250	11093888	***22***
CPT	160/315	11093889	***22***
CPT	200/355	11093890	***22***
CPT	250/400	11093891	***22***
CPT	315/450	11093892	***22***

DESCRIPTION

- Ø B-Ø A ≥ 100 mm used to create the flashing on a flat roof.
- Stop-ring on the body maintains the plug in a stable position and limits the risk of leaks.
- L = 400 mm for Ø B 250 to 450 mm,
  L = 648 mm for Ø B 500 to 630 mm.
- INSTALLATION page Flat roof penetration sleeve: FT.

FIELD OF APPLICATION

- Deflector integrated into existing CP and CPT to improve the performance of the existing installation.
- Reduces pressure drops on the CP or CPT by 35%.
- Reduces fan noise (an additional -3 dB (A) compared with the T-piece installed).

INSTALLATION

- Tool-free installation in existing branch connector T-pieces.
- To install a deflector in an existing CP:
  - identify the type of CP installed: shaft diameter, external diameter (often marked on the plug),
  - use the appropriate deflector for the CP installed,
  - remove the plug,
  - position the lower part of the deflector on the bottom of the branch connector T-piece (galvanised part in contact with the airflow),
  - fold the deflector to insert the upper part in the branch connector,
  - re-insert the plug, making sure that the assembly is airtight.
- To remove a deflector for shaft servicing access:
  - remove the plug,
  - grasp and press the upper part of the deflector then withdraw it from the branch connector,
  - remove the deflector and carry out the servicing,
  - re-position the lower part of the deflector on the bottom of the branch connector T-piece (galvanised part in contact with the airflow),
  - fold the deflector to insert the upper part in the branch connector,
  - re-insert the plug, making sure that the assembly is airtight.

Storey collector connection (CRE): Standard CRE storey collector

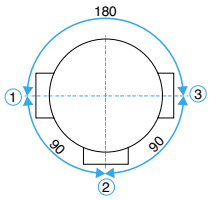

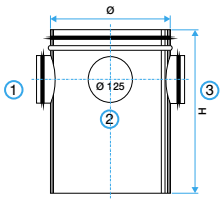

PRODUCT ADVANTAGES

- *Factory-mounted branch piece: no risk of leaks.*
- *Ease of installation: the lower part of the CRE slides into the duct for adjustment.*

RANGE

Ø	Reference	Discount family	Pack.
1/125			
125	11093899	***22***	60
160	11093700	***22***	46
200	11093711	***22***	30
250	11093722	***22***	20
315	11093735	***22***	-
355	11093748	***22***	-
400	11093761	***22***	-
500	11093774	***22***	-
630	11093787	***22***	-
1/125 - 2/125			
125	11093898	***22***	50
160	11093704	***22***	35
200	11093715	***22***	24
250	11093726	***22***	16
315	11093739	***22***	-
355	11093752	***22***	-
400	11093765	***22***	-
500	11093778	***22***	-

Ø	Reference	Discount family	Pack.
1/125 - 2/125 - 3/125			
160	11093707	***22***	-
200	11093718	***22***	-
250	11093729	***22***	-
315	11093742	***22***	-
355	11093755	***22***	-
400	11093768	***22***	-
500	11093781	***22***	-
630	11093794	***22***	-
1/125 - 3/125			
125	11093897	***22***	30
160	11093702	***22***	37
200	11093713	***22***	24
250	11093724	***22***	17
315	11093737	***22***	-
355	11093750	***22***	-
400	11093763	***22***	-
500	11093776	***22***	-

Ø	Reference	Discount family	Pack.
1/125 - 2/125 - 3/125 - 4/125			
250	11093733	***22***	-
315	11093746	***22***	-
355	11093759	***22***	-
400	11093772	***22***	-
630	11093798	***22***	-

FIELD OF APPLICATION

- Used to connect 1 to 4 Ø 125 branch connectors to the vertical shaft.
- Ensures leak-free installation without excessive pressure drop on branch connectors.
- Complements storey elements (2.47 m).
- Height:
  - 400 mm for Ø ≤ 250,
  - 415 mm for Ø ≥ 315.

Storey collector connection (CRE): CRE multi-dwelling branch connector

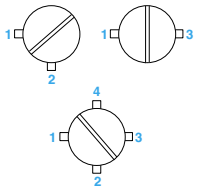

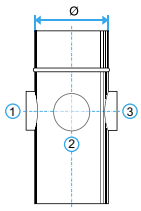

PRODUCT ADVANTAGES

- *2 dwellings can be connected to the same CRE.*
- *Fewer ducts needed and therefore useful space gained.*
- *Patented product.*

COMPLIANCE

- *Technical Approval 14.5/11-1698_V2.*
- *Compliant with NRA and DTU regulations.*

RANGE

Ø	Reference	Discount family
1/125 - 2/125		
200	11093900	***22***
250	11093903	***22***
315	11093906	***22***
355	11093908	***22***
400	11093912	***22***
450	11093916	***22***
1/125 - 3/125		
200	11093901	***22***
250	11093904	***22***
315	11093907	***22***
355	11093909	***22***
400	11093913	***22***
450	11093917	***22***

Ø	Reference	Discount family
1/125 - 2/125 - 3/125 - 4/125		
200	11093902	***22***
250	11093905	***22***
315	11093035	***22***
355	11093910	***22***
400	11093914	***22***
450	11093918	***22***

Ø	Reference	Discount family
1/125 - 2/125 - 3/125 - 4/125 - 5/125 - 6/125		
315	11093036	***22***
355	11093911	***22***
400	11093915	***22***

DESCRIPTION

- Separator plate made of A1 material.
- Height H = 730 mm.
- CRE storey collection connector for 2 to 6 Ø125 mm branch connectors, incorporating an acoustic partition (25 mm thick, 800 mm high). Silicon sealant ensures the airtightness of the separation due to the acoustic partition.
- Sound insulation levels characterised by the CSTB.
- The CMEV installation is dimensioned in accordance with DTU 68.1. The pressure drop from the multi-dwelling CRE can be considered as identical to a standard CRE (additional straight-line pressure drop due to the separator plate is considered insignificant).

FIELD OF APPLICATION

- Used to connect two different dwellings on the same floor to the same vertical shaft, while complying with the acoustic regulation requirements.
- Connection from 1 to 6 Ø 125 branch connectors.
- Ensures leak-free installation without excessive pressure drop on branch connectors.
- Caution: not to be used for gas CMEV.

INSTALLATION

- The multi-dwelling CRE is fitted to the vertical shaft like a conventional CRE.

TECHNICAL DETAILS

Ø CRE in mm	Kitchen humidity-controlled grille	Cloakroom humidity-controlled grille	Kitchen self-balanced grille
Noise insulation level: Dnew (C) in dB			
315	58	63	58
250	57	63	56
200	58	-	54

90° T-piece: 90° TE

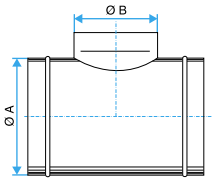

RANGE

Ø A	Ø B	Reference	Discount family	Pack.
Ø to 80				
80	80	11093102	***22***	30
Ø to 100				
100	80	11093105	***22***	-
100	100	11093104	***22***	32
Ø to 125				
125	80	11093109	***22***	10
125	100	11093108	***22***	
125	125	11093107	***22***	28
Ø to 160				
160	80	11093114	***22***	-
160	100	11093113	***22***	-
160	125	11093112	***22***	18
160	160	11093111	***22***	14
Ø to 200				
200	125	11093118	***22***	12
200	160	11093117	***22***	32
200	200	11093116	***22***	36
Ø to 250				
250	125	11093125	***22***	36
250	160	11093124	***22***	19
250	200	11093123	***22***	18
250	250	11093122	***22***	18
Ø to 315				
315	125	11093133	***22***	14
315	160	11093132	***22***	-
315	200	11093131	***22***	12
315	250	11093130	***22***	-
315	315	11093129	***22***	27

Ø A	Ø B	Reference	Discount family	Pack.
Ø to 355				
355	125	11093140	***22***	-
355	160	11093139	***22***	-
355	200	11093138	***22***	-
355	250	11093137	***22***	-
355	315	11093136	***22***	-
355	355	11093135	***22***	-
Ø to 400				
400	125	11093148	***22***	-
400	160	11093147	***22***	-
400	200	11093146	***22***	-
400	250	11093145	***22***	-
400	315	11093144	***22***	-
400	355	11093143	***22***	-
400	400	11093142	***22***	-
Ø to 450				
450	125	11094175	***22***	-
450	160	11094174	***22***	-
450	200	11094173	***22***	-
450	250	11093199	***22***	-
450	315	11093198	***22***	-
450	355	11093197	***22***	-
450	400	11093196	***22***	-
450	450	11093195	***22***	-
Ø to 500				
500	125	11093157	***22***	-
500	160	11093156	***22***	-
500	200	11093155	***22***	-
500	250	11093154	***22***	-
500	315	11093153	***22***	-

Ø A	Ø B	Reference	Discount family	Pack.
500	355	11093152	***22***	-
500	400	11093151	***22***	-
500	450	11093188	***22***	-
500	500	11093150	***22***	-
Ø to 560				
560	160	11094178	***22***	-
560	200	11094177	***22***	-
560	250	11094176	***22***	-
560	315	11094006	***22***	-
560	355	11094005	***22***	-
560	400	11094004	***22***	-
560	450	11094003	***22***	-
560	560	11094001	***22***	-
Ø to 630				
630	160	11093166	***22***	-
630	200	11093165	***22***	-
630	250	11093164	***22***	-
630	315	11093163	***22***	-
630	355	11093162	***22***	-
630	400	11093161	***22***	-
630	450	11093187	***22***	-
630	500	11093160	***22***	-
630	630	11093159	***22***	-
Ø to 710				
710	710	11094007	***22***	-
Ø to 800				
800	800	11093168	***22***	-
Ø to 900				
900	900	11094014	***22***	-

FIELD OF APPLICATION

- Used to connect two ductwork branches an angle of 90°.
- Ensures leak-free installation without excessive pressure drop on the branch connection.

INSTALLATION

- Easy to assemble using rotating interlocking parts: ducts are female in design, the accessories are male.

45° branch connector: 45° TO

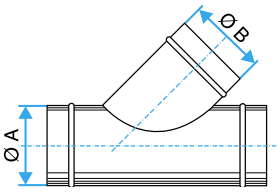

RANGE

Ø A	Ø B	Reference	Discount family
Ø to 80			
80	80	11093202	***22***
Ø to 100			
100	80	11093205	***22***
100	100	11093204	***22***
Ø to 125			
125	80	11093209	***22***
125	100	11093208	***22***
125	125	11093207	***22***
Ø to 160			
160	80	11093214	***22***
160	100	11093213	***22***
160	125	11093212	***22***
160	160	11093211	***22***
Ø to 200			
200	80	11093220	***22***
200	125	11093218	***22***
200	160	11093217	***22***
200	200	11093216	***22***
Ø to 250			
250	125	11093225	***22***
250	160	11093224	***22***
250	200	11093223	***22***
250	250	11093222	***22***
Ø to 315			
315	125	11093233	***22***
315	160	11093232	***22***
315	200	11093231	***22***
315	250	11093230	***22***
315	315	11093229	***22***
Ø to 355			
355	125	11093240	***22***
355	160	11093239	***22***
355	200	11093238	***22***
355	250	11093237	***22***
355	315	11093236	***22***
355	355	11093235	***22***

Ø A	Ø B	Reference	Discount family
Ø to 400			
400	125	11093248	***22***
400	160	11093247	***22***
400	200	11093246	***22***
400	250	11093245	***22***
400	315	11093244	***22***
400	355	11093243	***22***
400	400,	11093242	***22***
Ø to 450			
450	125	11093836	***22***
450	160	11093835	***22***
450	250	11093299	***22***
450	315	11093298	***22***
450	355	11093297	***22***
450	400	11093296	***22***
450	450	11093295	***22***
Ø to 500			
500	125	11093257	***22***
500	160	11093256	***22***
500	200	11093255	***22***
500	250	11093254	***22***
500	315	11093253	***22***
500	355	11093252	***22***
500	400	11093251	***22***
500	450	11094169	***22***
500	500	11093250	***22***
Ø to 560			
560	160	11093839	***22***
560	200	11093838	***22***
560	250	11093837	***22***
560	315	11094037	***22***
560	355	11094036	***22***
560	400	11094035	***22***
560	450	11094034	***22***
560	500	11094033	***22***
560	560	11094032	***22***

Ø A	Ø B	Reference	Discount family
Ø to 630			
630	160	11093266	***22***
630	200	11093265	***22***
630	250	11093264	***22***
630	315	11093263	***22***
630	355	11093262	***22***
630	400	11093261	***22***
630	450	11094170	***22***
630	500	11093260	***22***
630	630	11093259	***22***
Ø to 710			
710	710	11094038	***22***
Ø to 800			
800	800	11093268	***22***
Ø to 900			
900	900	11094045	***22***

FIELD OF APPLICATION

- Used to connect two ductwork branches an angle of 45 °.
- TO pieces should be used instead of TE connectors in air supply ductwork.
- Ensures leak-free installation without excessive pressure drop on the branch connection.

INSTALLATION

- Easy to assemble using interlocking parts: ducts are female in design, the accessories are male.

90° Y-branch piece: 90° CS

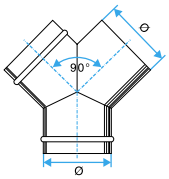

RANGE

Ø	Reference	Discount family
80	11093081	***22***
100	11093082	***22***
125	11093083	***22***
160	11093085	***22***
200	11093086	***22***
250	11093087	***22***

Ø	Reference	Discount family
315	11093088	***22***
355	11093089	***22***
400	11093090	***22***
450	11093091	***22***
500	11093092	***22***
560	11093821	***22***

Ø	Reference	Discount family
630	11093093	***22***
710	11093822	***22***
800	11093094	***22***
900	11093823	***22***

FIELD OF APPLICATION

- Confluence of two ductwork branches at 90° from each other.
- Aeraulic design means limited pressure drop, especially when used for air supply.

INSTALLATION

- Easy to assemble using interlocking parts: ducts are female, accessories are male.

Flat 90° Branch Connector: 90° PEP

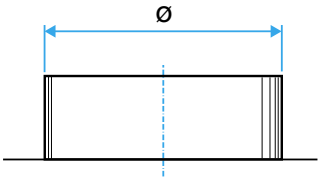

RANGE

Ø	Reference	Discount family	Pack.
80	11094611	22	150
100	11094612	22	90
125	11094613	22	104
160	11094614	22	50
200	11094615	22	40
250	11094616	22	40

Ø	Reference	Discount family	Pack.
315	11094617	22	28
355	11094618	22	18
400	11094619	22	18
450	11094624	22	-
500	11094620	22	-
560	11094140	22	-

Ø	Reference	Discount family	Pack.
630	11094621	22	-
710	11094141	22	-
800	11094622	22	-
900	11094142	22	-

FIELD OF APPLICATION

- 90° connector on flat duct section.
- Other diameters: please contact us.

INSTALLATION

- Beware of potential pressure drops, noise and leaks that could occur during the installation process.

Flat Oblique Branch Connector: 45° POP

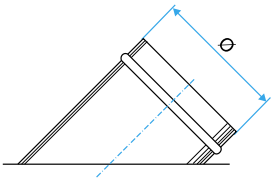

RANGE

Ø	Reference	Discount family
100	11097360	22
125	11097361	22
160	11097362	22
200	11097363	22
250	11097364	22
315	11097365	22

Ø	Reference	Discount family
355	11097366	22
400	11097367	22
450	11097368	22
500	11097369	22
560	11097370	22
630	11097371	22

Ø	Reference	Discount family
710	11097372	22
800	11097373	22
900	11097374	22

FIELD OF APPLICATION

- 45° connector on flat duct section.

INSTALLATION

- Beware of potential pressure drops, noise and leaks that could occur during the installation process.

Circular Oblique Branch Connector: POC

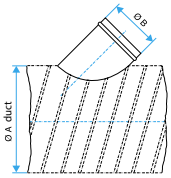

RANGE

Ø B	Ø A	Reference	Discount family
80			
80	125	11097355	22
80	160	11097356	22
80	200	11097357	22
100			
100	100	11097197	22
100	125	11097198	22
100	160	11097200	22
100	200	11097201	22
100	250	11097202	22
100	315	11097203	22
100	355	11097204	22
100	400	11097205	22
100	450	11097206	22
100	500	11097207	22
100	560	11097208	22
100	630	11097209	22
125			
125	125	11097210	22
125	160	11097212	22
125	200	11097213	22
125	250	11097214	22
125	315	11097215	22
125	355	11097216	22
125	400	11097217	22
125	450	11097218	22
125	500	11097219	22
125	560	11097220	22
125	630	11097221	22
160			
160	160	11097222	22
160	200	11097223	22
160	250	11097224	22
160	315	11097225	22
160	355	11097226	22
160	400	11097227	22
160	450	11097228	22
160	500	11097229	22
160	560	11097230	22
160	630	11097231	22
160	710	11097232	22
160	800	11097233	22
160	900	11097234	22

Ø B	Ø A	Reference	Discount family
200			
200	200	11097236	22
200	250	11097237	22
200	315	11097238	22
200	355	11097239	22
200	400	11097240	22
200	450	11097241	22
200	500	11097242	22
200	560	11097243	22
200	630	11097244	22
200	710	11097245	22
200	800	11097246	22
200	900	11097247	22
250			
250	250	11097250	22
250	315	11097251	22
250	355	11097252	22
250	400	11097253	22
250	450	11097254	22
250	500	11097255	22
250	560	11097256	22
250	630	11097257	22
250	710	11097258	22
250	800	11097259	22
250	900	11097260	22
315			
315	315	11097264	22
315	355	11097265	22
315	400	11097266	22
315	450	11097267	22
315	500	11097268	22
315	560	11097269	22
315	630	11097270	22
315	710	11097271	22
315	800	11097272	22
315	900	11097273	22
355			
355	355	11097277	22
355	400	11097278	22
355	450	11097279	22
355	500	11097280	22
355	560	11097281	22
355	630	11097282	22
355	710	11097283	22
355	800	11097284	22
355	900	11097285	22

Ø B	Ø A	Reference	Discount family
400			
400	400	11097289	22
400	450	11097290	22
400	500	11097291	22
400	560	11097292	22
400	630	11097293	22
400	710	11097294	22
400	800	11097295	22
400	900	11097296	22
450			
450	450	11097300	22
450	500	11097301	22
450	560	11097302	22
450	630	11097303	22
450	710	11097304	22
450	800	11097305	22
450	900	11097306	22
500			
500	500	11097310	22
500	560	11097311	22
500	630	11097312	22
500	710	11097313	22
500	800	11097314	22
500	900	11097315	22
560			
560	560	11097319	22
560	630	11097320	22
560	710	11097321	22
560	800	11097322	22
560	900	11097323	22
630			
630	630	11097327	22
630	710	11097328	22
630	800	11097329	22
630	900	11097330	22
710			
710	710	11097334	22
710	800	11097335	22
710	900	11097336	22
800			
800	800	11097340	22
800	900	11097341	22
900			
900	900	11097345	22

FIELD OF APPLICATION

- 45° connector on circular duct.
- Beware of potential pressure drops, noise and leaks that could occur during the installation process.

Circular 90° Branch Connector: PEC

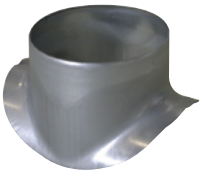

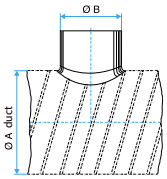

RANGE

Ø B	Ø A	Reference	Discount family
80			
80	80	11094570	22
80	100	11094571	22
80	125	11094572	22
80	200	11094593	22
80	150 - 160	11094592	22
80	250-315-355	11094574	22
100			
100	100	11094575	22
100	125	11094576	22
100	160	11094577	22
100	200	11094578	22
100	250	11094594	22
100	315 - 355	11094595	22
100	400 - 630	11094596	22
100	560	11097001	22
100	630	11094548	22
125			
125	125	11094541	22
125	160	11094542	22
125	200	11094543	22
125	250	11094597	22
125	315 - 355	11094598	22
125	400 - 630	11094599	22
125	560	11097002	22
125	630	11094549	22
160			
160	160	11094501	22
160	200	11094502	22
160	250	11094503	22
160	315	11094600	22
160	355 - 450	11094807	22
160	450	11094505	22
160	500	11094507	22
160	560	11097003	22
160	630	11094535	22
160	710	11097004	22
160	800	11097005	22
160	900	11097006	22

Ø B	Ø A	Reference	Discount family
200			
200	200	11094508	22
200	250	11094509	22
200	315	11094808	22
200	355 - 400	11094809	22
200	450	11094506	22
200	500	11094513	22
200	560	11097008	22
200	630	11094536	22
200	710	11097009	22
200	800	11097010	22
200	900	11097011	22
250			
250	250	11094514	22
250	315	11094515	22
250	355 - 400	11094810	22
250	450 - 560	11094811	22
250	500	11094518	22
250	560	11097014	22
250	630	11094537	22
250	710	11097015	22
250	800	11097016	22
250	900	11097017	22
315			
315	315	11094519	22
315	355	11094521	22
315	400	11094522	22
315	450	11094511	22
315	500	11094523	22
315	560	11097021	22
315	630	11094538	22
315	710	11097022	22
315	800	11097023	22
315	900	11097024	22
355			
355	355	11094524	22
355	400	11094525	22
355	450	11094550	22
355	500	11094526	22
355	560	11097028	22
355	630	11094539	22
355	710	11097029	22
355	800	11097030	22
355	900	11097031	22

Ø B	Ø A	Reference	Discount family
400			
400	400	11094527	22
400	450	11094551	22
400	500	11094528	22
400	560	11097035	22
400	630	11094529	22
400	710	11097036	22
400	800	11097037	22
400	900	11097038	22
450			
450	450	11094520	22
450	500	11094532	22
450	560	11097042	22
450	630	11094534	22
450	710	11097043	22
450	800	11097044	22
450	900	11097045	22
500			
500	500	11094530	22
500	560	11097049	22
500	630	11094531	22
500	710	11097050	22
500	800	11097051	22
500	900	11097052	22
560			
560	560	11094155	22
560	630	11097056	22
560	710	11097057	22
560	800	11097058	22
560	900	11097059	22
630			
630	630	11094533	22
630	710	11097063	22
630	800	11097064	22
630	900	11097065	22
710			
710	710	11094156	22
710	800	11097069	22
710	900	11097070	22
800			
800	800	11094157	22
800	900	11097074	22
900			
900	900	11094158	22

FIELD OF APPLICATION

- 90° connector on circular duct.
- Beware of potential pressure drops, noise and leaks that could occur during INSTALLATION.

Male-Female Plug (BMF) and Male (BM)

Male plug

Male-Female Plug

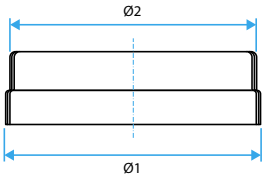

Ø1 - mounting on accessory
Ø2 - mounting on duct

RANGE

Ø	Reference	Discount family
BM		
80	11093401	***22***
BMF		
100	11093402	***22***
125	11093403	***22***
160	11093405	***22***
200	11093406	***22***

Ø	Reference	Discount family
250	11093407	***22***
315	11093408	***22***
355	11093033	***22***
400	21032471	***22***
BM		
355	11093409	***22***
400	11093410	***22***

Ø	Reference	Discount family
450	11093411	***22***
500	11093412	***22***
560	11094150	***22***
630	11093413	***22***
710	11094151	***22***
800	11093414	***22***

FIELD OF APPLICATION

- BMF: Plug compatible on an accessory or a duct.
- BM: Plug compatible on a duct.

INSTALLATION

- BMF:
  - male part to plug a duct.
  - female part to plug an accessory.

- BM:
  - male accessory to plug a duct.

Circular Protective Screen: GPC

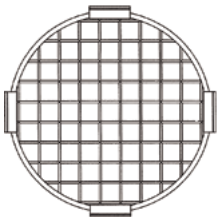

RANGE

Ø	Reference	Discount family
GPC		
80	11094395	***22***
100	11094396	***22***
125	11094397	***22***
160	11094398	***22***
200	11094456	***22***
250	11094457	***22***

Ø	Reference	Discount family
315	11094458	***22***
355	11094459	***22***
400	11094460	***22***
450	11094461	***22***
500	11094567	***22***
560	11094568	***22***
630	11094464	***22***

FIELD OF APPLICATION

- GPC: circular bird protection screen.

INSTALLATION

- GPC: Fixed to a duct using self-tapping screws.

Sealing flap

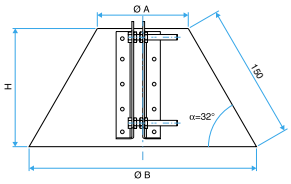

RANGE

Ø	Reference	Discount family
100	11094776	22
125	11094777	22
160	11094778	22
200	11094779	22
250	11094780	22

Ø	Reference	Discount family
315	11094781	22
355	11094782	22
400	11094783	22
450	11094784	22
500	11094785	22

Ø	Reference	Discount family
560	11094786	22
630	11094787	22
710	11094788	22
800	11094789	22

FIELD OF APPLICATION

- Used to ensure airtightness on roof penetrations.

INSTALLATION

- Adjusted using two screws to adapt to male or female diameters.
- Final airtightness is achieved on site with sealant or silicone.

Flat Roof Penetration Sleeve: FT

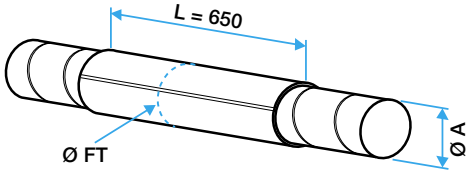

RANGE

Ø FT(mm)	Ø A	Reference	Discount family
160	125	11094601	22
200	160	11094602	22
250	200	11094603	22
315	250	11094604	22

Ø FT(mm)	Ø A	Reference	Discount family
355	315	11094605	22
400	355	11094606	22
450	400	11094607	22
500	450	11094610	22

Ø FT(mm)	Ø A	Reference	Discount family
550	500	11094608	22
680	630	11094609	22

DESCRIPTION

- Length = 650 mm.

FIELD OF APPLICATION

- Flat roof penetration sleeve compliant with DTU 68-3.
- Installed with a CP or a CPT connector.

Oblong ductwork

DESCRIPTION

- Straight galvanised steel duct shaped to L x H dimensions by forming and calibration on hydraulic press.
- Outer ribbing used to stiffen ducts beyond Ø 250 mm (basic manufacturing diameter).
- 20 oblong sections in standard size ranges.
- Pressure drop in oblong duct is same as in circular duct of equivalent diameter.

FIELD OF APPLICATION

- Air distribution systems requiring high airflow passage in reduced spaces (suspended ceilings) or visible ductwork.
- High-performance alternative to rectangular ductwork:
  - good airtightness and controlled pressure drops,
  - easy to maintain (no blind spots),
  - lightweight ductwork.

DIMENSIONS

L x H (mm)	Basic manufacturing Ø (mm)	Free cross section (m^2)	Equivalent Ø (mm)
360 x 80	250	0.0274	160
350 x 100	250	0.0329	200
450 x 100	315	0.0429	225
325 x 130	250	0.0386	200
425 x 130	315	0.0516	225
490 x 130	355	0.0601	250
410 x 165	315	0.0618	250
475 x 165	355	0.0725	275
545 x 165	400	0.0841	300
700 x 165	500	0.1100	355
515 x 215	400	0.1008	355
675 x 215	500	0.1352	375
880 x 215	630	0.1792	450
645 x 265	500	0.1558	425
850 x 265	630	0.2102	475
975 x 265	710	0.2433	500
620 x 320	500	0.1764	450
820 x 320	630	0.2404	500
950 x 320	710	0.2820	560
895 x 415	710	0.3345	630

INSTALLATION

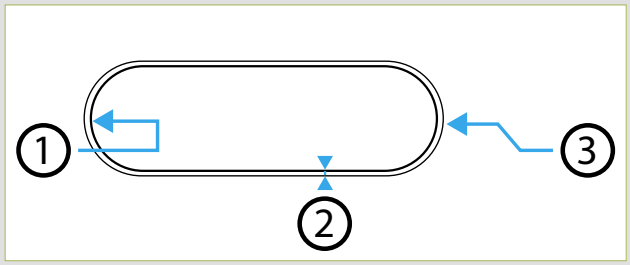

TOLERANCES

Duct tolerances (mm)	Accessory tolerances (mm)	Minimum peripheral gap (mm)	Maximum peripheral gap (mm)
0/+1.00	-1/-2.00	0.50	1.5
0/+1.00	-1/-2.00	0.50	1.5
0/+1.00	-1/-2.00	0.50	1.5
0/+1.00	-1/-2.00	0.50	1.5
0/+1.00	-1/-2.00	0.50	1.5
0/+1.00	-1/-2.00	0.50	1.5
0/+1.00	-1/-2.00	0.50	1.7
0/+1.00	-1/-2.00	0.50	1.7
0/+1.00	-1/-2.00	0.50	1.7
0/+1.40	-1/-2.00	0.50	1.7
0/+1.40	-1/-2.00	0.50	1.7
0/+1.40	-1/-2.00	0.50	1.7
0/+1.40	-1/-2.20	0.50	1.9
0/+1.40	-1/-2.00	0.50	1.7
0/+1.60	-1/-2.20	0.50	1.9
0/+1.60	-1/-2.20	0.50	1.9
0/+1.40	-1/-2.20	0.50	1.7
0/+1.60	-1/-2.20	0.50	1.9
0/+1.60	-1/-2.20	0.50	1.9
0/+1.60	-1/-2.20	0.50	1.9

Oblong rigid spiral ducts: CSRO

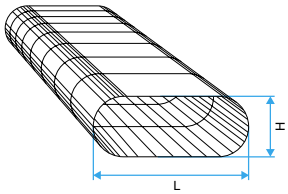

PRODUCT ADVANTAGES

- *Reduced dimensions for high airflows.*
- *Controlled pressure drop.*
- *Good airtightness.*
- *Easy assembly and servicing.*
- *Standard range of dimensions.*

RANGE

L x H (mm)	Reference	Discount family
H = 80		
360 x 80	11064391	***23***
H = 100		
350 x 100	11064392	***23***
450 x 100	11064393	***23***
H = 130		
325 x 130	11064443	***23***
425 x 130	11064444	***23***
490 x 130	11064445	***23***

L x H (mm)	Reference	Discount family
H = 165		
410 x 165	11064394	***23***
475 x 165	11064395	***23***
545 x 165	11064396	***23***
700 x 165	11064397	***23***
H = 215		
515 x 215	11064398	***23***
675 x 215	11064399	***23***
880 x 215	11064400	***23***

L x H (mm)	Reference	Discount family
H = 265		
645 x 265	11064401	***23***
850 x 265	11064402	***23***
975 x 265	11064403	***23***
H = 320		
620 x 320	11064404	***23***
820 x 320	11064405	***23***
950 x 320	11064406	***23***
H = 415		
895 x 415	11064408	***23***

DESCRIPTION

- 3 m long.
- Pressure drop in oblong duct is same as in circular duct of equivalent diameter.

FIELD OF APPLICATION

- Air distribution systems requiring high airflow passage in reduced spaces (suspended ceilings).
- Visible ductwork.

INSTALLATION

- Easy to assemble using interlocking parts: ducts are female, accessories are male.
- Supported by perforated strips, rails, etc.

Oblong horizontal elbow: 90° CHO

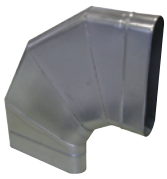

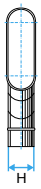

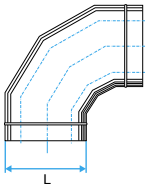

RANGE

L x H (mm)	Reference	Discount family
H = 80		
360 x 80	11063121	***23***
H = 100		
350 x 100	11063122	***23***
450 x 100	11063123	***23***
H = 130		
325 x 130	11066327	***23***
425 x 130	11066328	***23***
490 x 130	11066329	***23***

L x H (mm)	Reference	Discount family
H = 165		
410 x 165	11063124	***23***
475 x 165	11063125	***23***
545 x 165	11063126	***23***
700 x 165	11063127	***23***
H = 215		
515 x 215	11063128	***23***
675 x 215	11063129	***23***
880 x 215	11063130	***23***

L x H (mm)	Reference	Discount family
H = 265		
645 x 265	11063131	***23***
850 x 265	11063132	***23***
975 x 265	11063133	***23***
H = 320		
620 x 320	11063134	***23***
820 x 320	11063135	***23***
950 x 320	11063136	***23***
H = 415		
895 x 415	11063138	***23***

FIELD OF APPLICATION

- Used to change the direction of oblong ductwork by 90° in the same plane.

INSTALLATION

- Easy to assemble using interlocking parts: ducts are female, accessories are male.

Oblong horizontal elbow: 45° CHO

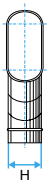

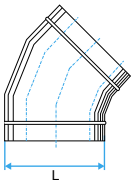

RANGE

L x H (mm)	Reference	Discount family
H = 80		
360 x 80	11063161	***23***
H = 100		
350 x 100	11063162	***23***
450 x 100	11063163	***23***
H = 130		
325 x 130	11066330	***23***
425 x 130	11066331	***23***
490 x 130	11066332	***23***

L x H (mm)	Reference	Discount family
H = 165		
410 x 165	11063164	***23***
475 x 165	11063165	***23***
545 x 165	11063166	***23***
700 x 165	11063167	***23***
H = 215		
515 x 215	11063168	***23***
675 x 215	11063169	***23***
880 x 215	11063170	***23***

L x H (mm)	Reference	Discount family
H = 265		
645 x 265	11063171	***23***
850 x 265	11063172	***23***
975 x 265	11063173	***23***
H = 320		
620 x 320	11063174	***23***
820 x 320	11063175	***23***
950 x 320	11063176	***23***
H = 415		
895 x 415	11063178	***23***

FIELD OF APPLICATION

- Used to change the direction of oblong ductwork by 45° in the same plane.

Oblong horizontal elbow: 30° CHO

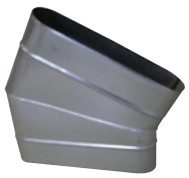

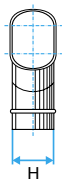

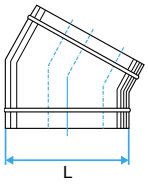

RANGE

L x H (mm)	Reference	Discount family
H = 80		
360 x 80	11063201	***23***
H = 100		
350 x 100	11063202	***23***
450 x 100	11063203	***23***
H = 130		
325 x 130	11066333	***23***
425 x 130	11066334	***23***
490 x 130	11066335	***23***

L x H (mm)	Reference	Discount family
H = 165		
410 x 165	11063204	***23***
475 x 165	11063205	***23***
545 x 165	11063206	***23***
700 x 165	11063207	***23***
H = 215		
515 x 215	11063208	***23***
675 x 215	11063209	***23***
880 x 215	11063210	***23***

L x H (mm)	Reference	Discount family
H = 265		
645 x 265	11063211	***23***
850 x 265	11063212	***23***
975 x 265	11063213	***23***
H = 320		
620 x 320	11063214	***23***
820 x 320	11063215	***23***
950 x 320	11063216	***23***
H = 415		
895 x 415	11063218	***23***

FIELD OF APPLICATION

- Used to change the direction of oblong ductwork by 30° in the same plane.

Oblong vertical elbow: 90° CVO

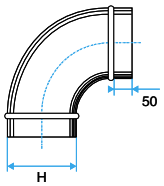

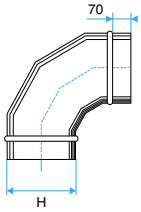

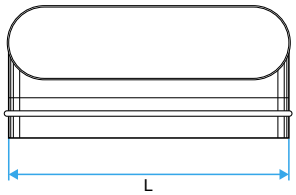

RANGE

L x H (mm)	Reference	Discount family
H = 80		
360 x 80	11063241	***23***
H = 100		
350 x 100	11063242	***23***
450 x 100	11063243	***23***
H = 130		
325 x 130	11066318	***23***
425 x 130	11066319	***23***
490 x 130	11066320	***23***

L x H (mm)	Reference	Discount family
H = 165		
410 x 165	11063244	***23***
475 x 165	11063245	***23***
545 x 165	11063246	***23***
700 x 165	11063247	***23***
H = 215		
515 x 215	11063248	***23***
675 x 215	11063249	***23***
880 x 215	11063250	***23***

L x H (mm)	Reference	Discount family
H = 265		
645 x 265	11063251	***23***
850 x 265	11063252	***23***
975 x 265	11063253	***23***
H = 320		
620 x 320	11063254	***23***
820 x 320	11063255	***23***
950 x 320	11063256	***23***
H = 415		
895 x 415	11063258	***23***

FIELD OF APPLICATION

- Used to change the direction of oblong ductwork by 90°.

INSTALLATION

- Easy to assemble using interlocking parts: ducts are female, accessories are male.

Oblong vertical elbow: 45° CVO

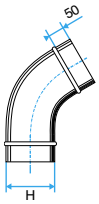

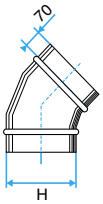

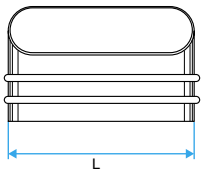

RANGE

L x H (mm)	Reference	Discount family
H = 80		
360 x 80	11063281	***23***
H = 100		
350 x 100	11063282	***23***
450 x 100	11063283	***23***
H = 130		
325 x 130	11066321	***23***
425 x 130	11066322	***23***
490 x 130	11066323	***23***

L x H (mm)	Reference	Discount family
H = 165		
410 x 165	11063284	***23***
475 x 165	11063285	***23***
545 x 165	11063286	***23***
700 x 165	11063287	***23***
H = 215		
515 x 215	11063288	***23***
675 x 215	11063289	***23***
880 x 215	11063290	***23***

L x H (mm)	Reference	Discount family
H = 265		
645 x 265	11063291	***23***
850 x 265	11063292	***23***
975 x 265	11063293	***23***
H = 320		
620 x 320	11063294	***23***
820 x 320	11063295	***23***
950 x 320	11063296	***23***
H = 415		
895 x 415	11063298	***23***

FIELD OF APPLICATION

- Used to change the direction of oblong ductwork by 45°.

Oblong vertical elbow: 30° CVO

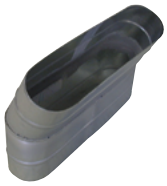

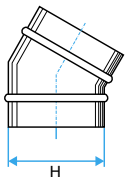

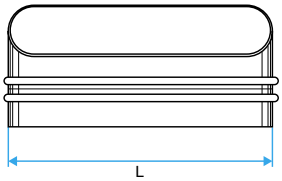

RANGE

L x H (mm)	Reference	Discount family
H = 80		
360 x 80	11063321	***23***
H = 100		
350 x 100	11063322	***23***
450 x 100	11063323	***23***
H = 130		
325 x 130	11066324	***23***
425 x 130	11066325	***23***
490 x 130	11066326	***23***
H = 165		
475 x 165	11063325	***23***
545 x 165	11063326	***23***
700 x 165	11063327	***23***

L x H (mm)	Reference	Discount family
H = 185		
410 x 165	11063324	***23***
H = 215		
515 x 215	11063328	***23***
675 x 215	11063329	***23***
880 x 215	11063330	***23***
H = 265		
645 x 265	11063331	***23***
850 x 265	11063332	***23***
975 x 265	11063333	***23***
H = 320		
620 x 320	11063334	***23***
820 x 320	11063335	***23***
950 x 320	11063336	***23***

L x H (mm)	Reference	Discount family
H = 415		
895 x 415	11063338	***23***

FIELD OF APPLICATION

- Used to change the direction of oblong ductwork by 30°.

Oblong Concentric Reduction: RCO

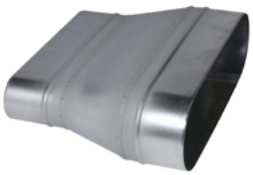

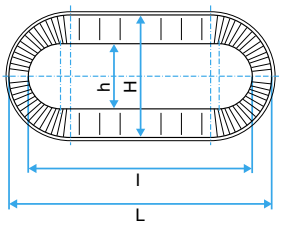

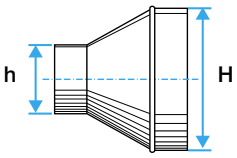

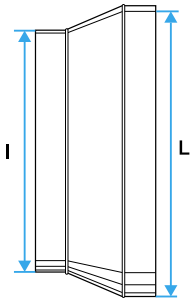

RANGE

L x H (mm)	l x h (mm)	Reference	Discount family
H = 100			
350 x 100	360 x 80	11064081	*23*
450 x 100	360 x 80	11064082	*23*
450 x 100	350 x 100	11064083	*23*
H = 130			
325 x 130	360 x 80	11066336	*23*
325 x 130	350 x 100	11066337	*23*
325 x 130	450 x 100	11066338	*23*
425 x 130	360 x 80	11066339	*23*
425 x 130	350 x 100	11066340	*23*
425 x 130	450 x 100	11066341	*23*
425 x 130	325 x 130	11066342	*23*
490 x 130	360 x 80	11066343	*23*
490 x 130	350 x 100	11066344	*23*
490 x 130	450 x 100	11066345	*23*
490 x 130	325 x 130	11066346	*23*
490 x 130	425 x 130	11066347	*23*
H = 165			
410 x 165	360 x 80	11064084	*23*
410 x 165	350 x 100	11064085	*23*
410 x 165	450 x 100	11064086	*23*
410 x 165	325 x 130	11066348	*23*
410 x 165	425 x 130	11066349	*23*
410 x 165	490 x 130	11066350	*23*
475 x 165	350 x 100	11064087	*23*
475 x 165	450 x 100	11064088	*23*
475 x 165	325 x 130	11066351	*23*
475 x 165	425 x 130	11066352	*23*
475 x 165	490 x 130	11066353	*23*
475 x 165	410 x 165	11064089	*23*
545 x 165	350 x 100	11064090	*23*
545 x 165	450 x 100	11064091	*23*
545 x 165	325 x 130	11066354	*23*
545 x 165	425 x 130	11066355	*23*
545 x 165	490 x 130	11066356	*23*
545 x 165	410 x 165	11064092	*23*
545 x 165	475 x 165	11064093	*23*
700 x 165	450 x 100	11064094	*23*
700 x 165	325 x 130	11066357	*23*
700 x 165	425 x 130	11066358	*23*
700 x 165	490 x 130	11066359	*23*
700 x 165	410 x 165	11064095	*23*
700 x 165	475 x 165	11064096	*23*
700 x 165	545 x 165	11064097	*23*

L x H (mm)	l x h (mm)	Reference	Discount family
H = 215			
515 x 215	450 x 100	11064098	*23*
515 x 215	325 x 130	11066360	*23*
515 x 215	425 x 130	11066361	*23*
515 x 215	490 x 130	11066362	*23*
515 x 215	410 x 165	11064099	*23*
515 x 215	475 x 165	11064100	*23*
515 x 215	545 x 165	11064101	*23*
515 x 215	700 x 165	11064102	*23*
675 x 215	325 x 130	11066363	*23*
675 x 215	425 x 130	11066364	*23*
675 x 215	490 x 130	11066365	*23*
675 x 215	410 x 165	11064103	*23*
675 x 215	475 x 165	11064104	*23*
675 x 215	545 x 165	11064105	*23*
675 x 215	700 x 165	11064106	*23*
675 x 215	515 x 215	11064107	*23*
880 x 215	425 x 130	11066366	*23*
880 x 215	490 x 130	11066367	*23*
880 x 215	545 x 165	11064108	*23*
880 x 215	700 x 165	11064109	*23*
880 x 215	515 x 215	11064110	*23*
880 x 215	675 x 215	11064111	*23*
H = 265			
645 x 265	425 x 130	11066368	*23*
645 x 265	425 x 130	11066369	*23*
645 x 265	475 x 165	11064112	*23*
645 x 265	545 x 165	11064113	*23*
645 x 265	700 x 165	11064114	*23*
645 x 265	515 x 215	11064115	*23*
645 x 265	675 x 215	11064116	*23*
850 x 265	490 x 130	11066371	*23*
850 x 265	545 x 165	11064118	*23*
850 x 265	700 x 165	11064119	*23*
850 x 265	515 x 215	11064120	*23*
850 x 265	675 x 215	11064121	*23*
850 x 265	880 x 215	11064123	*23*
850 x 265	645 x 265	11064124	*23*
850 x 265	620 x 320	11064122	*23*
975 x 265	700 x 165	11064125	*23*
975 x 265	515 x 215	11064126	*23*
975 x 265	675 x 215	11064127	*23*
975 x 265	880 x 215	11064129	*23*
975 x 265	645 x 265	11064128	*23*
975 x 265	850 x 265	11064131	*23*
975 x 265	620 x 320	11064130	*23*

L x H (mm)	l x h (mm)	Reference	Discount family
H = 320			
620 x 320	425 x 130	11066372	*23*
620 x 320	545 x 165	11064132	*23*
620 x 320	700 x 165	11064133	*23*
620 x 320	515 x 215	11064134	*23*
620 x 320	675 x 215	11064135	*23*
620 x 320	880 x 215	11064137	*23*
620 x 320	645 x 265	11064136	*23*
820 x 320	700 x 165	11064138	*23*
820 x 320	675 x 215	11064139	*23*
820 x 320	880 x 215	11064141	*23*
820 x 320	620 x 230	11064142	*23*
820 x 320	645 x 265	11064140	*23*
820 x 320	850 x 265	11064143	*23*
820 x 320	975 x 265	11064144	*23*
950 x 320	880 x 215	11064146	*23*
950 x 320	645 x 265	11064145	*23*
950 x 320	850 x 265	11064148	*23*
950 x 320	975 x 265	11064149	*23*
950 x 320	620 x 320	11064147	*23*
950 x 320	820 x 320	11064150	*23*
H = 415			
895 x 415	880 x 215	11064157	*23*
895 x 415	850 x 265	11064158	*23*
895 x 415	975 x 265	11064159	*23*
895 x 415	820 x 320	11064160	*23*
895 x 415	950 x 320	11064161	*23*

FIELD OF APPLICATION

- Oblong / oblong concentric reduction.

INSTALLATION

- Easy to assemble using interlocking parts: ducts are female, accessories are male.

Oblong Tangent Reduction on flat duct section: ROTP

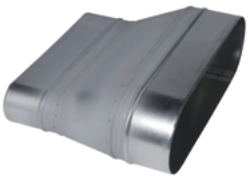

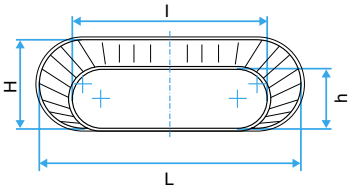

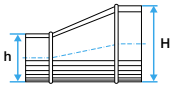

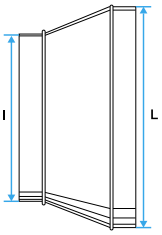

RANGE

L x H (mm)	l x h (mm)	Reference	Discount family
H = 100			
350 x 100	360 x 80	11064231	*23*
450 x 100	360 x 80	11064232	*23*
H = 130			
325 x 130	360 x 80	11066390	*23*
325 x 130	350 x 100	11066391	*23*
325 x 130	450 x 100	11066392	*23*
425 x 130	360 x 80	11066393	*23*
425 x 130	350 x 100	11066394	*23*
425 x 130	450 x 100	11066395	*23*
490 x 130	360 x 80	11066396	*23*
490 x 130	350 x 100	11066397	*23*
490 x 130	450 x 100	11066398	*23*
H = 165			
410 x 165	360 x 80	11064234	*23*
410 x 165	350 x 100	11064235	*23*
410 x 165	450 x 100	11064236	*23*
410 x 165	325 x 130	11066399	*23*
410 x 165	425 x 130	11066400	*23*
410 x 165	490 x 130	11066401	*23*
475 x 165	350 x 100	11064237	*23*
475 x 165	450 x 100	11064238	*23*
475 x 165	325 x 130	11066402	*23*
475 x 165	425 x 130	11066403	*23*
475 x 165	490 x 130	11066404	*23*
545 x 165	350 x 100	11064240	*23*
545 x 165	450 x 100	11064241	*23*
545 x 165	325 x 130	11066405	*23*
545 x 165	425 x 130	11066406	*23*
545 x 165	490 x 130	11066407	*23*
700 x 165	450 x 100	11064244	*23*
700 x 165	325 x 130	11066408	*23*
700 x 165	425 x 130	11066409	*23*
700 x 165	490 x 130	11066410	*23*

L x H (mm)	l x h (mm)	Reference	Discount family
H = 215			
515 x 215	450 x 100	11064248	*23*
515 x 215	325 x 130	11066411	*23*
515 x 215	425 x 130	11066412	*23*
515 x 215	490 x 130	11066413	*23*
515 x 215	410 x 165	11064249	*23*
515 x 215	475 x 165	11064250	*23*
515 x 215	545 x 165	11064251	*23*
515 x 215	700 x 165	11064252	*23*
675 x 215	325 x 130	11066414	*23*
675 x 215	490 x 130	11066416	*23*
675 x 215	410 x 165	11064253	*23*
675 x 215	475 x 165	11064254	*23*
675 x 215	545 x 165	11064255	*23*
675 x 215	700 x 165	11064256	*23*
880 x 215	425 x 130	11066417	*23*
880 x 215	490 x 130	11066418	*23*
880 x 215	545 x 165	11064258	*23*
880 x 215	700 x 165	11064259	*23*
H = 265			
645 x 265	490 x 130	11066420	*23*
645 x 265	475 x 165	11064262	*23*
645 x 265	545 x 165	11064263	*23*
645 x 265	700 x 165	11064264	*23*
645 x 265	515 x 215	11064265	*23*
645 x 265	675 x 215	11064266	*23*
645 x 265	880 x 215	11064267	*23*
850 x 265	425 x 130	11066421	*23*
850 x 265	490 x 130	11066422	*23*
850 x 265	545 x 165	11064268	*23*
850 x 265	700 x 165	11064269	*23*
850 x 265	515 x 215	11064270	*23*
850 x 265	675 x 215	11064271	*23*
850 x 265	880 x 215	11064273	*23*
850 x 265	620 x 320	11064272	*23*
975 x 265	700 x 165	11064275	*23*
975 x 265	515 x 215	11064276	*23*
975 x 265	675 x 215	11064277	*23*
975 x 265	880 x 215	11064279	*23*
975 x 265	620 x 320	11064280	*23*

L x H (mm)	l x h (mm)	Reference	Discount family
H = 320			
620 x 320	490 x 130	11066424	*23*
620 x 320	545 x 165	11064282	*23*
620 x 320	515 x 215	11064284	*23*
620 x 320	675 x 215	11064285	*23*
620 x 320	880 x 215	11064287	*23*
620 x 320	645 x 265	11064286	*23*
820 x 320	700 x 165	11064288	*23*
820 x 320	675 x 215	11064289	*23*
820 x 320	880 x 215	11064291	*23*
820 x 320	645 x 265	11064290	*23*
820 x 320	850 x 265	11064293	*23*
820 x 320	975 x 265	11064294	*23*
950 x 320	880 x 215	11064296	*23*
950 x 320	645 x 265	11064295	*23*
950 x 320	850 x 265	11064298	*23*
950 x 320	975 x 265	11064299	*23*
H = 415			
895 x 415	880 x 215	11064307	*23*
895 x 415	975 x 265	11064309	*23*
895 x 415	820 x 320	11064310	*23*
895 x 415	950 x 320	11064311	*23*

FIELD OF APPLICATION

- Tangent reduction on flat oblong/oblong sections.
- If no reduction on height, use an RCO.

INSTALLATION

- Easy to assemble using interlocking parts: ducts are female, accessories are male.

Oblong / Cylindrical Concentric Reduction: RCOC

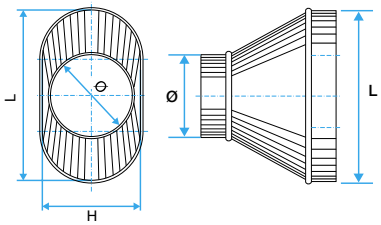

RANGE

L x H (mm)	Ø	Reference	Discount family
H = 80			
360 x 80	125	11063841	*23*
360 x 80	160	11063842	*23*
360 x 80	200	11063843	*23*
H = 100			
350 x 100	160	11063844	*23*
350 x 100	200	11063845	*23*
350 x 100	250	11063846	*23*
450 x 100	160	11063847	*23*
450 x 100	200	11063848	*23*
450 x 100	250	11063849	*23*
H = 130			
325 x 130	125	11066441	*23*
325 x 130	160	11066442	*23*
325 x 130	200	11066443	*23*
325 x 130	250	11066444	*23*
425 x 130	160	11066445	*23*
425 x 130	200	11066446	*23*
425 x 130	250	11066447	*23*
490 x 130	160	11066448	*23*
490 x 130	200	11066449	*23*
490 x 130	250	11066450	*23*
490 x 130	315	11066451	*23*
H = 165			
410 x 165	160	11066541	*23*
410 x 165	200	11063850	*23*
410 x 165	250	11063851	*23*
410 x 165	315	11063852	*23*
475 x 165	200	11063853	*23*
475 x 165	250	11063854	*23*
475 x 165	315	11063855	*23*
545 x 165	250	11063856	*23*
545 x 165	315	11063857	*23*
545 x 165	355	11063858	*23*
700 x 165	315	11063859	*23*
700 x 165	355	11063860	*23*
700 x 165	400	11063861	*23*

L x H (mm)	Ø	Reference	Discount family
H = 215			
515 x 215	315	11063862	*23*
515 x 215	355	11063863	*23*
515 x 215	400	11063864	*23*
675 x 215	315	11063865	*23*
675 x 215	355	11063866	*23*
675 x 215	400	11063867	*23*
675 x 215	450	11063868	*23*
880 x 215	355	11063869	*23*
880 x 215	400	11063870	*23*
880 x 215	450	11063871	*23*
880 x 215	500	11063872	*23*
H = 265			
645 x 265	355	11063873	*23*
645 x 265	400	11063874	*23*
645 x 265	450	11063875	*23*
645 x 265	500	11063876	*23*
850 x 265	400	11063877	*23*
850 x 265	450	11063878	*23*
850 x 265	500	11063879	*23*
850 x 265	560	11063880	*23*
975 x 265	400	11063881	*23*
975 x 265	450	11063882	*23*
975 x 265	500	11063883	*23*
975 x 265	560	11063884	*23*
H = 320			
620 x 320	355	11063885	*23*
620 x 320	400	11063886	*23*
620 x 320	450	11063887	*23*
620 x 320	500	11063888	*23*
820 x 320	400	11063889	*23*
820 x 320	450	11063890	*23*
820 x 320	500	11063891	*23*
820 x 320	560	11063892	*23*
950 x 320	450	11063893	*23*
950 x 320	500	11063894	*23*
950 x 320	560	11063895	*23*
950 x 320	630	11063896	*23*

L x H (mm)	Ø	Reference	Discount family
H = 415			
895 x 415	500	11063901	*23*
895 x 415	560	11063902	*23*
895 x 415	630	11063903	*23*
895 x 415	710	11063904	*23*

FIELD OF APPLICATION

- Concentric reduction between oblong ductwork and circular ductwork.

INSTALLATION

- Easy to assemble using interlocking parts: ducts are female, accessories are male.

Oblong / Cylindrical Tangent Reduction on flat section: ROCTP

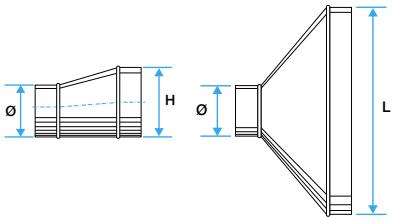

RANGE

L x H (mm)	Ø	Reference	Discount family
H = 80			
360 x 80	125	11063961	*23*
360 x 80	160	11063962	*23*
360 x 80	200	11063963	*23*
H = 100			
350 x 100	160	11063964	*23*
350 x 100	200	11063965	*23*
350 x 100	250	11063966	*23*
450 x 100	160	11063967	*23*
450 x 100	200	11063968	*23*
450 x 100	250	11063969	*23*
H = 130			
325 x 130	125	11066452	*23*
325 x 130	160	11066453	*23*
325 x 130	200	11066454	*23*
325 x 130	250	11066455	*23*
425 x 130	160	11066456	*23*
425 x 130	200	11066457	*23*
425 x 130	250	11066458	*23*
490 x 130	160	11066459	*23*
490 x 130	200	11066460	*23*
490 x 130	250	11066461	*23*
490 x 130	315	11066462	*23*
H = 165			
410 x 165	200	11063970	*23*
410 x 165	250	11063971	*23*
410 x 165	315	11063972	*23*
475 x 165	200	11063973	*23*
475 x 165	250	11063974	*23*
475 x 165	315	11063975	*23*
545 x 165	250	11063976	*23*
545 x 165	315	11063977	*23*
545 x 165	355	11063978	*23*
700 x 165	315	11063979	*23*
700 x 165	355	11063980	*23*
700 x 165	400	11063981	*23*

L x H (mm)	Ø	Reference	Discount family
H = 215			
515 x 215	315	11063982	*23*
515 x 215	355	11063983	*23*
515 x 215	400	11063984	*23*
675 x 215	315	11063985	*23*
675 x 215	355	11063986	*23*
675 x 215	400	11063987	*23*
675 x 215	450	11063988	*23*
880 x 215	355	11063989	*23*
880 x 215	400	11063990	*23*
880 x 215	450	11063991	*23*
880 x 215	500	11063992	*23*
H = 265			
645 x 265	355	11063993	*23*
645 x 265	400	11063994	*23*
645 x 265	450	11063995	*23*
645 x 265	500	11063996	*23*
850 x 265	400	11063997	*23*
850 x 265	450	11063998	*23*
850 x 265	500	11063999	*23*
975 x 265	400	11064001	*23*
975 x 265	450	11064002	*23*
975 x 265	500	11064003	*23*
975 x 265	560	11064004	*23*
H = 320			
620 x 320	355	11064005	*23*
620 x 320	400	11064006	*23*
620 x 320	450	11064007	*23*
620 x 320	500	11064008	*23*
820 x 320	400	11064009	*23*
820 x 320	450	11064010	*23*
820 x 320	500	11064011	*23*
820 x 320	560	11064012	*23*
950 x 320	450	11064013	*23*
950 x 320	500	11064014	*23*
950 x 320	560	11064015	*23*
950 x 320	630	11064016	*23*

L x H (mm)	Ø	Reference	Discount family
H = 415			
895 x 415	500	11064021	*23*
895 x 415	560	11064022	*23*
895 x 415	630	11064023	*23*
895 x 415	710	11064024	*23*

FIELD OF APPLICATION

- Flat reduction between oblong ductwork and circular ductwork.

INSTALLATION

- Easy to assemble using interlocking parts: ducts are female, accessories are male.

Oblong Horizontal Y-piece: 90° CSH

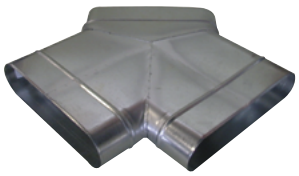

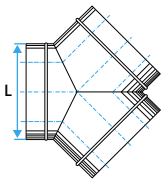

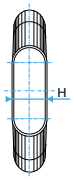

RANGE

L x H (mm)	Reference	Discount family
H = 80		
360 x 80	11063481	***23***
H = 100		
350 x 100	11063482	***23***
450 x 100	11063483	***23***
H = 130		
325 x 130	11066535	***23***
425 x 130	11066536	***23***
490 x 130	11066537	***23***

L x H (mm)	Reference	Discount family
H = 165		
410 x 165	11063484	***23***
475 x 165	11063485	***23***
545 x 165	11063486	***23***
700 x 165	11063487	***23***
H = 215		
515 x 215	11063488	***23***
675 x 215	11063489	***23***
880 x 215	11063490	***23***

L x H (mm)	Reference	Discount family
H = 265		
645 x 265	11063491	***23***
850 x 265	11063492	***23***
975 x 265	11063493	***23***
H = 320		
620 x 320	11063494	***23***
820 x 320	11063495	***23***
950 x 320	11063496	***23***
H = 415		
895 x 415	11063498	***23***

FIELD OF APPLICATION

- Confluence of two oblong duct branches at 90° in the same plane.
- Aeraulic design means very limited pressure drop, especially when used for air supply.

Oblong Male Connector: RMO

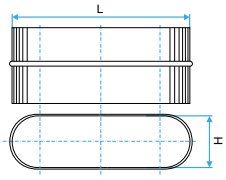

RANGE

L x H (mm)	Reference	Discount family
H = 80		
360 x 80	11063001	***23***
H = 100		
350 x 100	11063002	***23***
450 x 100	11063003	***23***
H = 130		
325 x 130	11066463	***23***
425 x 130	11066464	***23***
490 x 130	11066465	***23***

L x H (mm)	Reference	Discount family
H = 165		
410 x 165	11063004	***23***
475 x 165	11063005	***23***
545 x 165	11063006	***23***
700 x 165	11063007	***23***
H = 215		
515 x 215	11063008	***23***
675 x 215	11063009	***23***
880 x 215	11063010	***23***
H = 265		
645 x 265	11063011	***23***
850 x 265	11063012	***23***
975 x 265	11063013	***23***

L x H (mm)	Reference	Discount family
H = 320		
620 x 320	11063014	***23***
820 x 320	11063015	***23***
950 x 320	11063016	***23***
H = 415		
895 x 415	11063018	***23***

FIELD OF APPLICATION

- Used to connect two oblong ducts together.

Oblong Female Connector: RFO

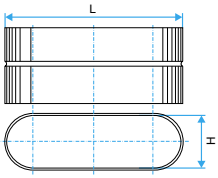

RANGE

L x H (mm)	Reference	Discount family
H = 80		
360 x 80	11063041	***23***
H = 100		
350 x 100	11063042	***23***
450 x 100	11063043	***23***
H = 130		
325 x 130	11066466	***23***
425 x 130	11066467	***23***
490 x 130	11066468	***23***

L x H (mm)	Reference	Discount family
H = 165		
410 x 165	11063044	***23***
475 x 165	11063045	***23***
545 x 165	11063046	***23***
700 x 165	11063047	***23***
H = 215		
515 x 215	11063048	***23***
675 x 215	11063049	***23***
880 x 215	11063050	***23***
H = 265		
645 x 265	11063051	***23***
850 x 265	11063052	***23***
975 x 265	11063053	***23***

L x H (mm)	Reference	Discount family
H = 320		
620 x 320	11063054	***23***
820 x 320	11063055	***23***
950 x 320	11063056	***23***
H = 415		
895 x 415	11063058	***23***

FIELD OF APPLICATION

- Used to connect two oblong accessories together.

Circular 90° Branch Connector: 90° PEC

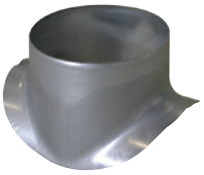

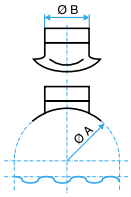

RANGE

Ø B	Reference	Discount family	Pack.
Ø to **80**			
80	11094570	***22***	60
Ø to **100**			
80	11094571	***22***	60
100	11094575	***22***	75
Ø to **130**			
80	11094572	***22***	70
100	11094576	***22***	80
125	11094541	***22***	
Ø to **165**			
100	11094577	***22***	90
125	11094542	***22***	50
160	11094501	***22***	25

Ø B	Reference	Discount family	Pack.
Ø to **215**			
80	11094593	***22***	70
100	11094578	***22***	90
125	11094543	***22***	52
160	11094502	***22***	30
200	11094508	***22***	32
Ø to **265**			
100	11094594	***22***	90
125	11094597	***22***	50
160	11094503	***22***	40
200	11094509	***22***	32
265	11094514	***22***	24

Ø B	Reference	Discount family	Pack.
Ø to **320**			
160	11094600	***22***	42
200	11094808	***22***	32
250	11094515	***22***	24
315	11094519	***22***	55
Ø to **365**			
100	11094595	***22***	90
125	11094598	***22***	54
160	11094807	***22***	48
250	11094810	***22***	24
315	11094521	***22***	-
355	11094524	***22***	-

Ø B	Reference	Discount family	Pack.
Ø to **415**			
125	11094599	***22***	50
315	11094522	***22***	65
355	11094525	***22***	-
400	11094527	***22***	-
Ø to **465**			
160	11094505	***22***	-
200	11094506	***22***	
250	11094811	***22***	24
315	11094511	***22***	50
355	11094550	***22***	-
400	11094551	***22***	-
450	11094551	***22***	-

FIELD OF APPLICATION

- 90° branch connector on circular part of oblong duct.
- Beware of potential pressure drops, noise and leaks that could occur during the installation process.

Circular Oblique Branch Connector: 45° POC

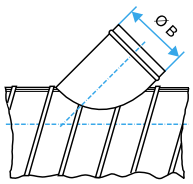

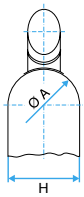

RANGE

Ø B	Reference	Discount family
Ø to **100**		
100	11097197	***22***
Ø to **130**		
100	11097198	***22***
125	11097210	***22***
Ø to **165**		
100	11097200	***22***
125	11097212	***22***
160	11097222	***22***
Ø to **215**		
100	11097201	***22***
125	11097213	***22***
160	11097223	***22***
200	11097236	***22***

Ø B	Reference	Discount family
Ø to **265**		
100	11097202	***22***
125	11097214	***22***
160	11097224	***22***
200	11097237	***22***
250	11097250	***22***
Ø to **320**		
100	11097203	***22***
125	11097215	***22***
160	11097225	***22***
200	11097238	***22***
250	11097251	***22***
315	11097264	***22***

Ø B	Reference	Discount family
Ø to **365**		
100	11097204	***22***
125	11097216	***22***
160	11097226	***22***
200	11097239	***22***
250	11097252	***22***
315	11097265	***22***
355	11097277	***22***
Ø to **415**		
100	11097205	***22***
125	11097217	***22***
160	11097227	***22***
200	11097240	***22***
250	11097253	***22***

Ø B	Reference	Discount family
315	11097266	***22***
355	11097278	***22***
400	11097289	***22***
Ø to **465**		
100	11097206	***22***
125	11097218	***22***
160	11097228	***22***
200	11097241	***22***
250	11097254	***22***
315	11097267	***22***
355	11097279	***22***
400	11097290	***22***
450	11097300	***22***

FIELD OF APPLICATION

- 90° connector on flat duct section.
- Beware of potential pressure drops, noise and leaks that could occur during the installation process.

Oblong 90° branch connector: PDO 90°

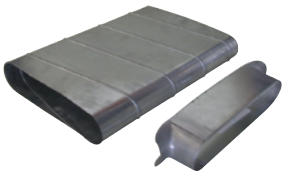

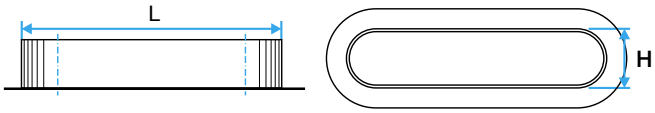

RANGE

L x H (mm)	Ø	Reference	Discount family
H = 80			
360 x 80	80	11063561	*23*
360 x 80	100	11063562	*23*
360 x 80	130	11063652	*23*
360 x 80	165	11063563	*23*
360 x 80	215	11063564	*23*
360 x 80	265	11063565	*23*
360 x 80	320	11063566	*23*
360 x 80	415	11063567	*23*
360 x 80	515	11063568	*23*
H = 100			
350 x 100	100	11063569	*23*
350 x 100	130	11063653	*23*
350 x 100	165	11063570	*23*
350 x 100	215	11063571	*23*
350 x 100	265	11063572	*23*
350 x 100	320	11063573	*23*
350 x 100	415	11063574	*23*
350 x 100	515	11063575	*23*
450 x 100	100	11063576	*23*
450 x 100	130	11063654	*23*
450 x 100	165	11063577	*23*
450 x 100	215	11063578	*23*
450 x 100	265	11063579	*23*
450 x 100	320	11063580	*23*
450 x 100	415	11063581	*23*
450 x 100	515	11063582	*23*
H = 130			
325 x 130	130	11066469	*23*
325 x 130	165	11066470	*23*
325 x 130	215	11066471	*23*
325 x 130	265	11066472	*23*
325 x 130	320	11066473	*23*
325 x 130	415	11066474	*23*
325 x 130	515	11066475	*23*
425 x 130	130	11066476	*23*
425 x 130	165	11066477	*23*
425 x 130	215	11066478	*23*
425 x 130	265	11066479	*23*
425 x 130	320	11066480	*23*
425 x 130	415	11066481	*23*
490 x 130	130	11066483	*23*
490 x 130	165	11066484	*23*
490 x 130	215	11066485	*23*
490 x 130	265	11066486	*23*
490 x 130	320	11066487	*23*
490 x 130	415	11066488	*23*
490 x 130	515	11066489	*23*

L x H (mm)	Ø	Reference	Discount family
H = 165			
410 x 165	165	11063583	*23*
410 x 165	215	11063584	*23*
410 x 165	265	11063585	*23*
410 x 165	320	11063586	*23*
410 x 165	415	11063587	*23*
410 x 165	515	11063588	*23*
475 x 165	165	11063589	*23*
475 x 165	215	11063590	*23*
475 x 165	265	11063591	*23*
475 x 165	320	11063592	*23*
475 x 165	415	11063593	*23*
475 x 165	515	11063594	*23*
545 x 165	165	11063595	*23*
545 x 165	215	11063596	*23*
545 x 165	265	11063597	*23*
545 x 165	320	11063598	*23*
545 x 165	415	11063599	*23*
545 x 165	515	11063600	*23*
700 x 165	165	11063601	*23*
700 x 165	215	11063602	*23*
700 x 165	265	11063603	*23*
700 x 165	320	11063604	*23*
700 x 165	415	11063605	*23*
700 x 165	515	11063606	*23*
H = 215			
515 x 215	215	11063607	*23*
515 x 215	265	11063608	*23*
515 x 215	320	11063609	*23*
515 x 215	415	11063610	*23*
515 x 215	515	11063611	*23*
675 x 215	215	11063612	*23*
675 x 215	265	11063613	*23*
675 x 215	320	11063614	*23*
675 x 215	415	11063615	*23*
675 x 215	515	11063616	*23*
880 x 215	215	11063617	*23*
880 x 215	265	11063618	*23*
880 x 215	320	11063619	*23*
880 x 215	415	11063620	*23*
880 x 215	515	11063621	*23*

L x H (mm)	Ø	Reference	Discount family
H = 265			
645 x 265	265	11063622	*23*
645 x 265	320	11063623	*23*
645 x 265	415	11063624	*23*
645 x 265	515	11063625	*23*
850 x 265	265	11063626	*23*
850 x 265	320	11063627	*23*
850 x 265	415	11063628	*23*
850 x 265	515	11063629	*23*
975 x 265	265	11063630	*23*
975 x 265	320	11063631	*23*
975 x 265	415	11063632	*23*
975 x 265	515	11063633	*23*
H = 320			
620 x 320	320	11063634	*23*
620 x 320	415	11063635	*23*
620 x 320	515	11063636	*23*
820 x 320	320	11063637	*23*
820 x 320	415	11063638	*23*
820 x 320	515	11063639	*23*
950 x 320	320	11063640	*23*
950 x 320	415	11063641	*23*
950 x 320	515	11063642	*23*
H = 415			
895 x 415	415	11063645	*23*
895 x 415	515	11063646	*23*

FIELD OF APPLICATION

- 90° branch connector on circular part of oblong duct.

Oblong 90° Branch Connector on flat section: PDOP

RANGE

L x H (mm)	Reference	Discount family
H = 80		
360 x 80	11063401	***23***
H = 100		
350 x 100	11063402	***23***
450 x 100	11063403	***23***
H = 130		
325 x 130	11066523	***23***
425 x 130	11066524	***23***
490 x 130	11066525	***23***

L x H (mm)	Reference	Discount family
H = 165		
410 x 165	11063404	***23***
475 x 165	11063405	***23***
545 x 165	11063406	***23***
700 x 165	11063407	***23***
H = 215		
515 x 215	11063408	***23***
675 x 215	11063409	***23***
880 x 215	11063410	***23***

L x H (mm)	Reference	Discount family
H = 265		
645 x 265	11063411	***23***
850 x 265	11063412	***23***
975 x 265	11063413	***23***
H = 320		
620 x 320	11063414	***23***
820 x 320	11063415	***23***
950 x 320	11063416	***23***
H = 415		
895 x 415	11063418	***23***

FIELD OF APPLICATION

- Oblong 90° branch connector on flat part of duct.

INSTALLATION

- Beware of potential pressure drops, noise and leaks that could occur during INSTALLATION.

Oblong Ring Mounting for rectangular Isone fire damper

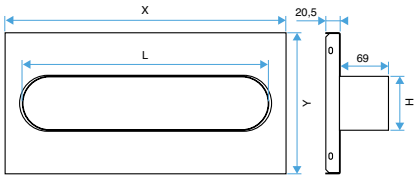

RANGE

X x Y (mm)	L x H (mm)	Reference	Discount family
400 x 200	360 x 80	11043350	***14***
400 x 200	350 x 100	11043351	***14***
350 x 200	325 x 130	11043353	***14***
450 x 200	425 x 130	11043354	***14***
450 x 200	410 x 165	11043356	***14***
600 x 200	545 x 165	11043358	***14***
550 x 250	515 x 215	11043360	***14***
700 x 250	675 x 215	11043361	***14***

X x Y (mm)	L x H (mm)	Reference	Discount family
950 x 350	880 x 215	11043362	***14***
700 x 300	645 x 265	11043363	***14***
1000 x 350	950 x 320	11043367	***14***

DESCRIPTION

- Galvanised steel shell adapting to a rectangular Isone fire damper.
- Use two shells to connect a damper on both sides.
  X x Y = dimension of a rectangular Isone.
  L x H = dimensions of oblong duct.

FIELD OF APPLICATION

- Used to connect an oblong ductwork to a rectangular Isone fire damper.

Oblong Balancing Damper: RGO

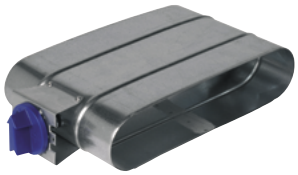

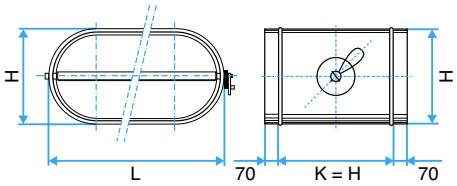

RANGE

L x H (mm)	Reference	Discount family
325 x 130	11066532	*23*
350 x 100	11063082	*23*
360 x 80	11063081	*23*
410 x 165	11063084	*23*
425 x 130	11066533	*23*
450 x 100	11063083	*23*
475 x 165	11063085	*23*

L x H (mm)	Reference	Discount family
490 x 130	11066534	*23*
515 x 215	11063088	*23*
545 x 165	11063086	*23*
620 x 320	11063094	*23*
645 x 265	11063091	*23*
675 x 215	11063089	*23*
700 x 165	11063087	*23*

L x H (mm)	Reference	Discount family
820 x 320	11063095	*23*
850 x 265	11063092	*23*
880 x 215	11063090	*23*
950 x 320	11063096	*23*
975 x 265	11063093	*23*

FIELD OF APPLICATION

- Provides pressure control in oblong ductwork branches.

Oblong Male Plug: BMO

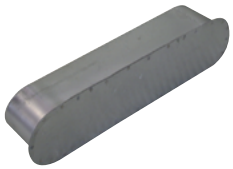

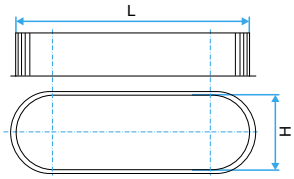

RANGE

L x H (mm)	Reference	Discount family
H = 80		
360 x 80	11063361	*23*
H = 100		
350 x 100	11063362	*23*
450 x 100	11063363	*23*
H = 130		
325 x 130	11066529	*23*
425 x 130	11066530	*23*
490 x 130	11066531	*23*

L x H (mm)	Reference	Discount family
H = 165		
410 x 165	11063364	*23*
475 x 165	11063365	*23*
545 x 165	11063366	*23*
700 x 165	11063367	*23*
H = 215		
515 x 215	11063368	*23*
675 x 215	11063369	*23*
880 x 215	11063370	*23*
H = 265		
645 x 265	11063371	*23*
850 x 265	11063372	*23*
975 x 265	11063373	*23*

L x H (mm)	Reference	Discount family
H = 320		
620 x 320	11063374	*23*
820 x 320	11063375	*23*
950 x 320	11063376	*23*
H = 415		
895 x 415	11063378	*23*

FIELD OF APPLICATION

- Plug used to close an oblong ductwork.

INSTALLATION

- Easy to assemble using interlocking parts: ducts are female, accessories are male.

Roll of mineral wool

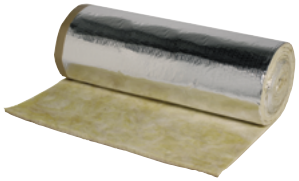

COMPLIANCE(S)

- *Class A2-s1,d0 as per EN 13501-1.*
- *5 cm overlapping flap on one side of the length, to ensure mechanical resistance in accordance with DTU regulations 45.2.*

DESCRIPTION

- Mineral wool protected by a reinforced aluminium vapour barrier.
- 25 mm roll: 13.8 m^2 where L x W = 12 m x 1.15 m.
- 50 mm roll: 8.63 m^2 where L x W = 7.5 m x 1.15 m.
- Thermal conductivity coefficient: = 0.035 W/m.K (at 10 °C) and = 0.040 W/m.K (at 40 °C).

FIELD OF APPLICATION

- Thermal insulation of rigid interior ductwork (convection and conduction).
- Air conditioning ductwork
- Prevents condensation in ducts on CMEV systems crossing unheated, interior rooms.

RANGE

Designation	References	Discount family
Roll of 12 m		
Roll of mineral wool, 25 mm	11091743	***22***
Roll of 7.5 m		
Roll of mineral wool, 50 mm	11091744	***22***

Mounting accessories

FIELD OF APPLICATION

- Installation tools for rock wool or compact insulation.
- To tape the compact insulation, use only RAA adhesive tape.

RANGE

Designation	References	Discount family
RAA, width 75 mm, roll of 50 m	11091004	***22***
RAV, roll of 50 m	11091010	***22***

Passive circular silencer

OCTA

RANGE

Designation	References	Discount family
GALVANISED STEEL RANGE		
OCTA 125 sealed	11094632	*22*
OCTA 160 sealed	11094633	*22*
OCTA 200 sealed	11094634	*22*
OCTA 250 sealed	11094635	*22*
OCTA 315 sealed	11094636	*22*
OCTA 355 sealed	11094637	*22*
OCTA 400 sealed	11094638	*22*
OCTA 450 sealed	11094639	*22*
OCTA 500 sealed	11094640	*22*
OCTA 630 sealed	11094641	*22*
OCTA 560 sealed	11094648	*22*
OCTA 710 sealed	11094647	*22*
OCTA 800 sealed	11094642	*22*
OCTA 900 sealed	11094646	*22*
OCTA 1000 sealed	11094643	*22*

DESCRIPTION

- External casing made of solid galvanised steel or aluminium.
- Internal casing made of perforated galvanised steel or aluminium.
- Jointed connection rings for all dimensions.

Standard connection rings beyond that size.

- Sound-proofing: rock wool + glass mat.
- M0 fire rating.
- 400°C - 2h fire rating version available on demand.
- Class D Airtightness according to EN 1751 standard

FIELD OF APPLICATION

- Attenuation of fan unit or cabinet noise radiated in ductwork.
- Efficient at low frequencies
- Air exhaust and air supply.

DIMENSIONS - WEIGHT

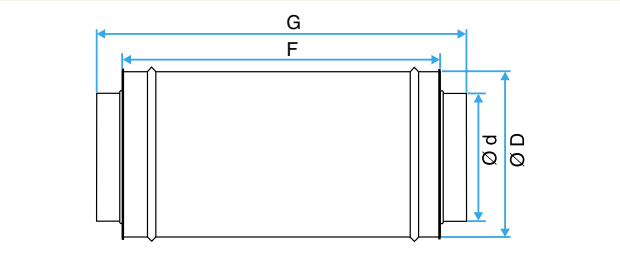

Ø d (mm)	Ø D (mm)	F (mm)	G (mm)	Weight (kg)
125	224	600	720	6.5
160	280	600	720	7.5
200	300	600	720	9
250	355	600	720	11
315	500	600	980	15
355	560	900	980	17
400	600	900	980	19
450	630	900	980	21
500	710	900	980	23
560	800	1200	980	26
630	800	1200	980	29
710	900	1200	1440	44
800	1000	1200	1440	56
900	1120	1200	1400	100
1000	1250	1200	1400	110

AIRFLOW AND ACOUSTIC DETAILS

- Attenuation in dB, measured according to ISO 7235.
- Pressure loss: for airflow speeds in ducts below 10 m/s, the pressure loss generated by the OCTA is insignificant.

Model	Central frequency of octave band (Hz)							
	63	125	250	500	1000	2000	4000	8000
125	3	8	10	20	28	35	21	9
160	4	7	9	16	27	26	13	5
200	3	8	9	19	32	17	8	3
250	3	6	7	15	29	11	5	4
315	1	5	6	15	21	9	4	5
355	3	4	5	12	21	7	5	2
400	2	4	5	12	15	6	5	2
450	2	4	5	12	15	6	5	2
500	2	4	5	10	15	6	4	2
560	2	4	5	10	13	5	3	2
630	1	4	4	9	13	5	3	1
710	1	3	4	9	13	5	3	1
800	1	3	4	9	12	4	3	1
900	1	3	3	8	11	4	2	1
1000	1	3	3	8	10	4	2	1

OCTA with baffle

ADVANTAGES

- *Efficient attenuation.*
- *Low pressure loss.*
- *Simple to install on circular ductwork.*
- *Range available starting at Ø 250.*

RANGE

Designation	References	Discount family
OCTA with baffle 250 + seal	11094990	***22***
OCTA with baffle 315 + seal	11094991	***22***
OCTA with baffle 355 + seal	11094992	***22***
OCTA with baffle 400 + seal	11094993	***22***
OCTA with baffle 450 + seal	11094994	***22***
OCTA with baffle 500 + seal	11094995	***22***
OCTA with baffle 560 + seal	11094996	***22***
OCTA with baffle 630 + seal	11094997	***22***

DESCRIPTION

Silencer

- External casing made of solid galvanised steel.
- Jointed connection rings.
- Internal casing made of perforated galvanised steel.
- Sound-proofing: rock wool + glass mat.
- M0 fire rating.
- Class C Airtightness according to EN 1751 standard

Central baffle

- Solid rock wool panels.
- Anti-flocking glass mat.
- Galvanised steel frame.
- Leading edges built in to baffle.
- Baffle thickness: 50 mm up to Ø 355 mm and 100 mm for larger ducts.
- M1 fire rating.
- 400°C - 2h fire rating version available on demand.

FIELD OF APPLICATION

- Attenuation of fan unit or cabinet noise radiated in ductwork.
- Efficient at medium and high frequencies with low pressure losses.
- Air exhaust and air supply.

DIMENSIONS - WEIGHT

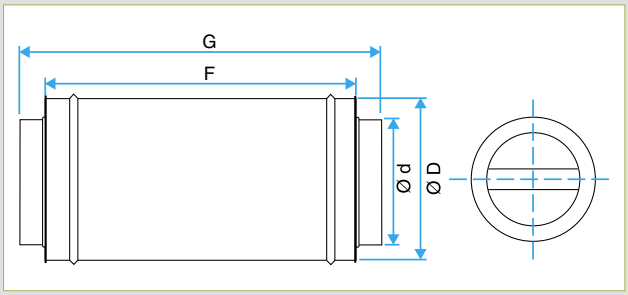

Model	Ø D (mm)	F (mm)	Weight (kg)
250	355	900	132
315	400	900	15,5
355	450	900	17
400	500	900	20
450	560	900	22,5
500	630	900	25
560	800	1000	45
630	800	1000	45,5

AIRFLOW AND ACOUSTIC DETAILS

Attenuation in dB, measured according to ISO 7235.

	Central frequency of octave band (Hz)							
	63	125	250	500	1000	2000	4000	8000
250	4	5	11	20	31	39	29	15
315	2	2	7	15	27	36	19	10
355	1	2	6	14	28	32	13	12
400	3	4	6	16	30	30	14	10
450	1	2	6	17	28	28	21	12
500	1	3	6	15	22	19	10	11
560	1	6	9	16	22	23	14	8
630	2	4	6	16	22	24	15	7

Presentation of ECTA rectangular range

DESCRIPTION

- Solid rock wool panels.
- Density: 55 kg/m3 (average).
- Profiles with rounded edges enabling 10 % reduction of pressure loss in relation to a standard profile. The leading edge option is no longer necessary.
- Black anti-flocking glass mat, 1 mm thick in standard range.
- Galvanised steel frame, standard thickness 6/10°.
- M0 fire rating, or A1 under new Euroclass ratings.
- Standard thickness 100 and 200 mm.
- Dimensions (L and H) from 300 to 2400 mm.

FIELD OF APPLICATION

- Attenuation of noise from fan units or cabinets radiated in rectangular ductwork.
- Effective at low, medium and high frequencies.
- Airflow speed between two baffles limited to 15 m/s.

INSTALLATION

- Introduced using a feeder in a rectangular ductwork element.
- To be inserted between slide rails for improved control over performance.

AVAILABLE OPTIONS

Specify with order.

1.Coatings - glass fabric to replace the glass mat for sterile room applications, or perforated metal sheeting to protect the glass mat.
2.Baffle frame: 304 or 316L stainless steel.
3.Cabinets - full cabinets including the casing, riveted baffles and METU type connection frame.
4.Fastening accessories - H and U junction pieces: contact us for details.
5.Other baffle thicknesses 50 and 300 mm: contact us for details.

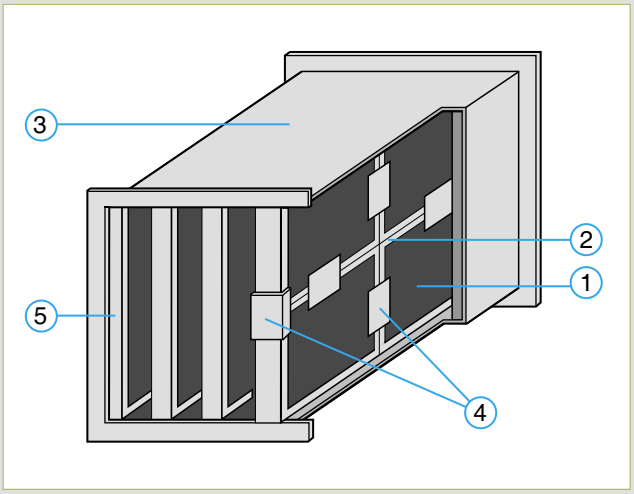

Passive rectangular silencer

ECTA 100

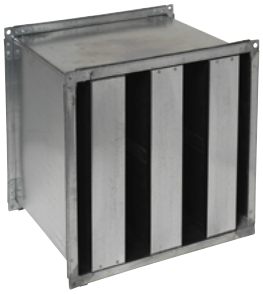

RANGE

Designation	References
ECTA 100 L/H 300-1399 mm	11094701
ECTA 100 L/H 1400-1999 mm	11094703
ECTA 100 L/H 2000-2400 mm	11094705

DESCRIPTION

- Solid rock wool panels.
- Density: 55 kg/m3 (average).
- Black anti-flocking glass mat, 1 mm thick in standard range.
- Galvanised steel frame, standard thickness 6/10°.
- M0 fire rating, or A1 under new Euroclass ratings.
- Thickness 100 mm.
- Dimensions (L and H) from 300 to 2400 mm.
- 400°C - 2h fire rating version available on demand.

DIMENSIONS

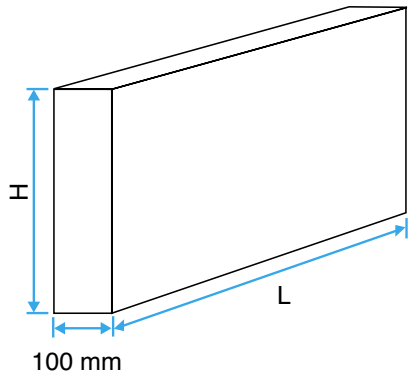

H	L (mm)								L (mm)
300	300	500	600	900	1000	1200	1500	1800	2000
300	1.7	2.4	2.8	3.9	4.3	5.0	6.2	-	-
500	-	3.4	3.9	5.4	5.9	6.9	8.3	7.3	-
600	-	-	4.5	6.1	6.7	7.8	9.4	9.8	-
900	-	-	-	8.3	9.0	10.5	12.7	11.1	-
1000	-	-	-	-	9.8	11.4	13.8	14.9	-
1200	-	-	-	-	-	13.2	26.0	16.2	-
1500	-	-	-	-	-	-	19.3	18.7	24.5
1800	-	-	-	-	-	-	-	22.5	28.5
2000	-	-	-	-	-	-	-	-	31.1

AIRFLOW AND ACOUSTIC DETAILS

Attenuation in dB, measured according to ISO 7235. Example for L = 1000 mm.

	Central frequency of octave band (Hz)							
	63	125	250	500	1000	2000	4000	8000
50	3	7	16	27	45	42	32	23
100	2	4	10	19	31	30	22	15
150	1	3	7	14	22	23	17	11
200	1	2	5	10	16	18	13	8

Pressure loss in Pa, measured according to ISO 7235. Example for L = 1000 mm.

	Speed between air channels in m/s				
	2	4	6	8	10
50	< 10	13	29	53	82
100	< 10	< 10	19	34	51
150	< 10	< 10	14	24	38
200	< 10	< 10	11	19	30

Passive rectangular silencer

ECTA 200

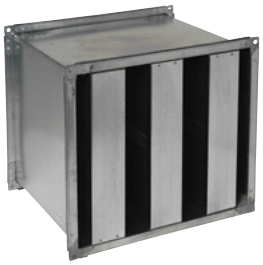

RANGE

Designation	References
ECTA 200 L/H 300-1399 mm	11094702
ECTA 200 L/H 1400-1999 mm	11094704
ECTA 200 L/H 2000-2400 mm	11094706

DESCRIPTION

- Solid rock wool panels.
- Density: 55 kg/m3 (average).
- Black anti-flocking glass mat, 1 mm thick in standard range.
- Galvanised steel frame, standard thickness 6/10°.
- M0 fire rating, or A1 under new Euroclass ratings.
- Thickness 200 mm.
- Dimensions (L and H) from 300 to 2400 mm.
- 400°C - 2h fire rating version available on demand.

DIMENSIONS

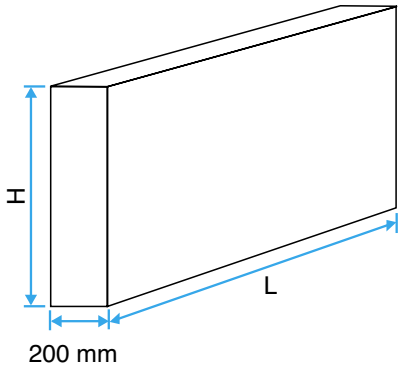

H	L (mm)								L (mm)
300	300	500	600	900	1000	1200	1500	1800	2000
300	3.0	4.4	5.0	7.1	7.8	9.1	11.2	13.2	-
500	-	6.2	7.1	9.9	10.8	12.6	15.4	18.2	-
600	-	-	8.2	11.3	12.3	14.4	17.5	20.6	-
900	-	-	-	15.5	16.9	19.7	23.9	28.1	-
1000	-	-	-	-	18.4	21.4	26.0	30.6	-
1500	-	-	-	-	-	25.0	30.2	35.5	-
1200	-	-	-	-	-	-	36.6	43.0	47.2
1800	-	-	-	-	-	-	-	50.5	55.5
2000	-	-	-	-	-	-	-	-	61.02

AIRFLOW AND ACOUSTIC DETAILS

Attenuation in dB, measured according to ISO 7235. Example for L = 1000 mm.

Inset (mm)	Central frequency of octave band (Hz)							
	63	125	250	500	1000	2000	4000	8000
50	7	12	25	34	59	50	41	31
100	6	8	18	28	39	40	26	20
150	5	6	14	24	29	27	17	14
200	4	5	11	21	23	17	11	10

Pressure loss in Pa, measured according to ISO 7235. Example for L = 1000 mm.

Inset (mm)	Speed between air channels in m/s				
	2	4	6	8	10
50	< 10	15	35	61	96
100	< 10	< 11	25	43	66
150	< 10	< 10	20	34	54
200	< 10	< 10	16	29	45

Elastomer mountings

DESCRIPTION

- Black neoprene mountings.
- Mounting dimensions: 45 x 45 mm, thickness = 20 mm.
- Dimensions of sheet of 81 mountings: 440 x 440 mm, thickness 20 mm.
- Maximum load: 60 kg.
- Packaging: - Sheet of 81 mountings linked by a thin, easily cut neoprene strand,
  - set of 4 mountings.

FIELD OF APPLICATION

- Vibration insulation for duct supports and small fan cabinets.

RANGE

Designation	References	Discount family	Pack. 1
Elastomer mountings, set of 4	11094562	***22***	10
Elastomer mountings, sheet of 81	11094565	***22***	5

Visco-elastic sheet

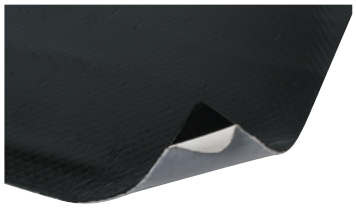

DESCRIPTION

- Visco-elastic sheet with adhesive face.
- Density: 1950 kg/m3
- Aera density: 10 kg/m2
- Dimensions: 750 x 1000 mm, thickness: 6 mm.
- M4 fire resistance rating.
- Installation T°: +15 to +40°C.
- Operating temp -30 to +90 °C.

FIELD OF APPLICATION

- Reduction of noise radiated by vibrating walls.
- Fixed to grease-free, dust-free metal or plastic walls using an adhesive surface.
- For installation on outer walls of cabinets or horizontal ducts.

RANGE

Designation	References	Discount family
Visco-elastic sheet	11094560	***22***

Anti-vibration mountings

DESCRIPTION

- Rubber mountings of different diameters and densities (Shore).
- Supplied with fasteners and support plate.

FIELD OF APPLICATION

- Used to absorb the vibrations of a fan unit or cabinet.
- Spare parts for fan units and cabinets with belt-pulley drives.

Caution: may not be fitted on the outside of a belt-pulley drive fan unit.

RANGE

Designation	Ø	Type	References	Discount family
Anti-vibration mountings (pack of 4)				
Anti-vibration mountings (pack of 4)	40	Shore 45 / 4 kg per mounting	11034385	***80***
Anti-vibration mountings (pack of 4)	40	Shore 60 / 10 kg per mounting	11034386	***80***
Anti-vibration mountings (pack of 8)				
Anti-vibration mountings (pack of 8)	60	Shore 45 / 15 kg per mounting	11034387	***80***
Anti-vibration mountings (pack of 8)	60	Shore 60 / 25 kg per mounting	11034388	***80***

Airtight flexible connection: RT Flex

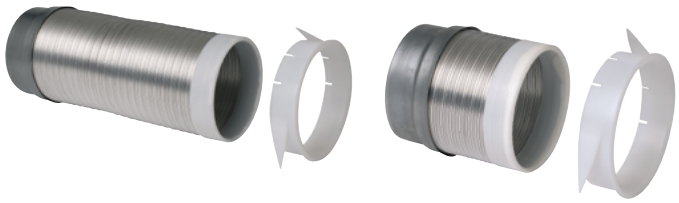

ADVANTAGES

- *Guaranteed air tightness of column/terminal connection.*
- *All-in-one product enabling fast, rapid installation.*
- *Compatible with Aldes Ø 125 mm terminal.*

COMPLIANCE(S)

- *Class C air tightness guaranteed by CETIAT test No. 1214081.*
- *Class A1.*

RANGE

Designation	References	Discount family	Pack. 1
RT flex 10 - 30 cm	11091315	***22***	16
RT flex 30 - 120 cm	11091316	***22***	8
Trident sleeve for RT Flex	11018569	***22***	60

DESCRIPTION

• An all-in-one product that features a female connection, an extensible flexible duct and a trident sleeve for connection to the terminal and support in the plasterboard.
Connection including:
- a metal female connector slotting into a sealed branch (no need for air tightness seal nor screws in this case),
- a flexible, aluminium Alflex duct that can be extended from 10 to 30 cm or from 30 to 120 cm,
- a plastic sleeve comprising:
1) an end-piece ensuring the terminal slots into the tube correctly with an airtight closure,
2) a trident sleeve clipped on to the end-piece while rotating about itself and which ensures mechanical support inside the plasterboard when the assembly is pushed in.

FIELD OF APPLICATION

• Airtight and durable terminal connections (column/terminal) on multi-dwelling or commercial building ductwork.
• Compatible with all Aldes Ø 125 mm terminals (except for gas terminals).
• Compatible with standard or sealed ductwork.
• Can be fitted in all types of plasterboard less than 18 mm thick.

INSTALLATION

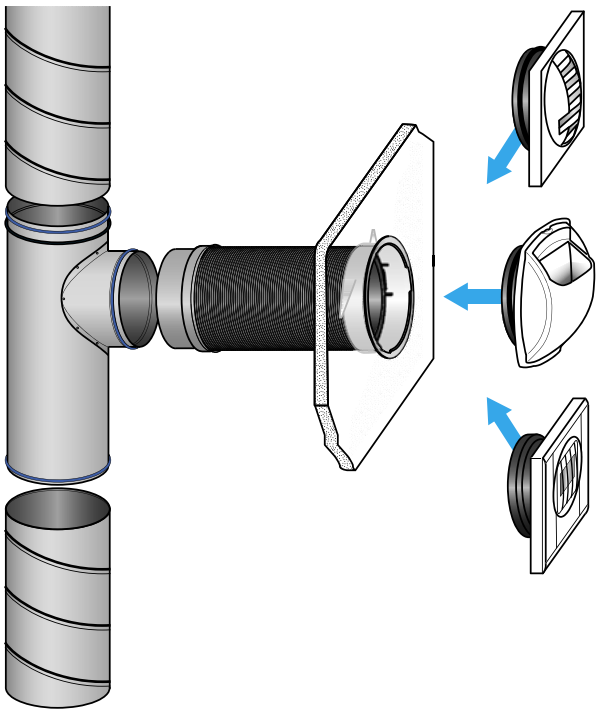

TECHNICAL DETAILS

• Flexible part features Alflex aluminium duct 12/100ths.
• A1 class (as per administrative order of 21 Nov. 2002) up to the plasterboard.
• Extends the Class C air tightness of the rigid sealed network (CETIAT test No. 2714166).
• Compatible with Ø 125 mm terminals: Bap color, Bap'SI, Bahia, BH, Tda.
• Not compatible with boiler exhaust (BAZ) in gas CMEV systems.
• Average operating temp: -30 °C to +120 °C.
• Alflex melting point = 660 °C. SPECIFICATION TEXT - Exhaust terminals must be connected to vertical risers using an A1 class Ø 125 RT Flex terminal connection if the required length is below 1.2 m or rigid otherwise, and via a storey collector. Quick-connect branches are not to be used for aeraulic and acoustic reasons.
- If RT Flex terminal connections are used, the Class C air tightness of sealed ductwork will be extended to the terminal.

Alflex galvanised steel

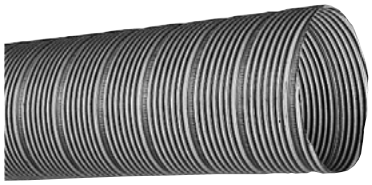

COMPLIANCE(S)
• A1 fire rating as per administrative order of 21 November 2002.

RANGE

Ø (mm)	References	Discount family
80	11091801	22
100	11091802	22
125	11091803	22
150	11091804	22

Ø (mm)	References	Discount family
160	11091805	22
200	11091806	22
250	11091807	22
315	11091808	22

Ø (mm)	References	Discount family
355	11091809	22
400	11091810	22
450	11091811	22
500	11091812	22

DESCRIPTION

• Zinc-plated steel sheet with spiral stapling, thickness 12/100 mm.
• Supplied in straight length of 3 m.
• Bend radius:
- Ø 80 to 150 = 1 D,
- Ø 160 to 250 = 1.5 D,
- Ø 315 to 355 = 2 D,
- Ø 400 to 450 = 3 D,
- Ø 500 = 4 D.

FIELD OF APPLICATION

• Horizontal side flues or long terminal connections. Due to its rigidity, galvanised Alflex ensures good mechanical resistance for long lengths between the rigid ductwork and the terminal.
• Maximum operating temperature:
- continuous: 250 °C,
- occasional: 350 °C.

Compacted Alflex alu

COMPLIANCE(S)
• A1 fire rating as per administrative order of 21 November 2002.

RANGE

Ø (mm)	References	Discount family
80	11091821	22
100	11091822	22
125	11091823	22
150	11091824	22

Ø (mm)	References	Discount family
160	11091825	22
200	11091826	22
250	11091827	22
315	11091828	22

Ø (mm)	References	Discount family
355	11091829	22
400	11091830	22
450	11091831	22
500	11091832	22

DESCRIPTION

• A410 aluminium sheet 12/100 mm, spiral stapling.
Packaging:
- Ø 80 to 250: 3 m compacted into 0.60 m,
- Ø 315 to 400: 3 m compacted into 1 m,
- Ø 450 and 500: in straight lengths of 3 m.
• Bend radius:
- Ø 80 to 250 = 0.6 D,
- Ø 315 to 400 = 1 D,
- Ø 450 = 3 D,
- Ø 500 = 4 D.

FIELD OF APPLICATION

• Connection from branch to terminal. Requires use of a sleeve.
• Aluminium Alflex is flexible and light, very simple to handle and install.
• Prohibited for gas CMEV system, insufficient thickness.
• Maximum operating temperature:
- continuous: 250°C,
- occasional: 300°C.

Thermally-insulated aluminium Alflex

COMPLIANCE(S)
• A1 fire rating as per administrative order of 21 November 2002.

RANGE

Ø (mm)	References	Discount family
80	11091950	***22***
100	11091951	***22***
125	11091952	***22***
150	11091953	***22***

Ø (mm)	References	Discount family
160	11091954	***22***
200	11091955	***22***
250	11091956	***22***
315	11091957	***22***

Ø (mm)	References	Discount family
355	11091958	***22***
400	11091959	***22***
450	11091960	***22***
500	11091961	***22***

DESCRIPTION

• Alflex aluminium on the inside, a 25 mm layer of glass wool and Alflex aluminium 'light' on the outside.
• Supplied in 3 m lengths.
• Bend radius: - Ø80 to 150 = 2 D, - Ø160 to 250 = 2.5 D, - Ø315 to 450 = 3 D, - Ø500 = 4 D.

FIELD OF APPLICATION

• Semi-rigid thermally-insulated connection from the branch to the terminal (for heat recovery, air conditioning, etc.).
• Maximum operating temperature: - continuous: 200°C, - occasional: 250°C.

Soundproofed Alflex aluminium

COMPLIANCE(S)
• A1 fire rating as per administrative order of 21 November 2002.

RANGE

Ø (mm)	References	Discount family
80	11091970	***22***
100	11091971	***22***
125	11091972	***22***
150	11091973	***22***

Ø (mm)	References	Discount family
160	11091974	***22***
200	11091975	***22***
250	11091976	***22***
315	11091977	***22***

Ø (mm)	References	Discount family
355	11091978	***22***
400	11091979	***22***
450	11091980	***22***

DESCRIPTION

• Perforated Alflex aluminium on the inside, a 25 mm layer of glass wool and Alflex aluminium on the outside.
• Supplied in 3 m lengths.
• Bend radius: - Ø 80 to 150 = 2 D,
- Ø 160 to 250 = 2.5 D,
- Ø 315 to 450 = 3 D,
- Ø 500 = 4 D.

FIELD OF APPLICATION

• Semi-rigid connection from branch to terminal with sound attenuation.
• Maximum operating temperature:
- continuous: 200°C,
- peak: 250°C.

Flexible gas duct selection guide

DESCRIPTION

ALFLEX COMPACT GAS 0.15 OR ALFLEX 0.30 ?

• Only Alflex gas 0.30 mm is authorised between the column branch and the terminal.
• To connect the boiler to the BAZ terminal, the possible choices involve 2 types of flexible duct. For reasons of practicality (can be compacted or stretched), Alflex compact gas 0.15 mm is often used.

WHAT DIAMETER?

• Between the riser and the terminal, the connection (to BAZ stainless steel sleeve) will use Ø 125.
• Between the terminal and the boiler, the connection will be made according to the type of BAZ, either 125/132 for a BAZ Ø125 or (125/132 + 125/120 sleeve) or 118/125 for a BAZ Ø120. Caution, use of the 118/125 flexible duct does not satisfy the requirements of the DTU 24.1-2 regulations.

CONNECTION FROM RISER VMC (1) => BAZ (4) TERMINAL

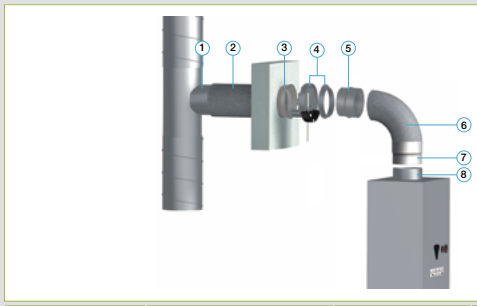

1 - Ø branch connection (mm)	2 - Gas hose	3 - Sleeve	4 - BAZ
Ø 125 mm	Alflex special gas 0.3 Ø 125 mm (code11091336)	Stainless steel (code 11018963)	BAZ Ø 125 mm or Ø 120 mm

Alflex compact gas 125/132

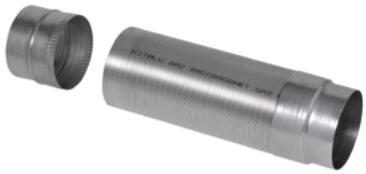

COMPLIANCE(S)

• Compliant with DTU 68.3 requirements concerning gas CMEV.
• Compliant with DTU 24.1 requirements.

DESCRIPTION

• Aluminium sheet 15/100 mm with spiral stapling.
• Packaging: 1.5 m compacted to 30 cm.
• Fitted to boiler using specific reduction, without reducing nozzle diameter.
• BAZ Ø125: direct fitting without pulling the duct on BAZ Ø125.
• BAZ Ø120: fitting with a sleeve 125/120.
• Class A1 (M0).

FIELD OF APPLICATION

• Connection between Gas CMEV boiler to terminal compliant with DTU 68.3 and DTU 24.1 requirements.
• Qualigaz approval (indelible marking).
• Prohibited for condensation gas CMEV.
• Operating temperature:
- normal: 250 °C,
- maximum: 400 °C.

RANGE

Designation	Weight	References	Discount family
Alflex compact gas kit Ø125	***0.450***	11091347	***22***
125/120 sleeve for BAZ 120	***0.055***	11091348	***22***

Alflex special gas 0.30

COMPLIANCE(S)

• A1 fire rating as per administrative order of 21 November 2002.

DESCRIPTION

• Aluminium sheet 30/100 mm with spiral stapling.
• Packaging: supplied in 3 m straight lengths.

FIELD OF APPLICATION

• Connection between boiler and terminal, between terminal and column in Gas CMEV systems.
• Maximum operating temperature:
- continuous: 250 °C,
- occasional: 350 °C.

RANGE

Ø (mm)	References	Discount family
125 int / 131 ext	11091336	***22***
150 int / 156 ext	11091337	***22***

Aluminium Algaine ducts: details

ADVANTAGES

- *Mechanical resistance and duct air tightness (polyester laminate).*
- *Acoustic performance with sound-proofed version.*
- *Thermally-insulated Algaine available in 25 mm.*

COMPLIANCE(S)

- *Algaine ducts are A1 in accordance with the requirements of article CH 32.1 of the administrative order of 14 February 2000.*

DESCRIPTION

- Bare or insulated flexible aluminium ducts for connection between rigid ductwork and terminals in commercial buildings (class A1 ducts).

COMMON TECHNICAL DETAILS

- Inner duct: laminated thin aluminium sheets and polyester (90 microns thick), bonded round a spiral steel cord.
- The use of polyester between the aluminium sheets ensures better air tightness and mechanical resistance to shearing than 100 % aluminium ducts.

Algaine aluminium

DESCRIPTION

- 90-micron lamination of aluminium and polyester glued around a spiral steel wire. Ensures better air tightness and mechanical resistance to shearing compared to 100 % aluminium ducts.
- Packaging: - Ø 80: 10 m compacted into 60 cm,
  - Ø 100 to 250: 10 m compacted into 50 cm,
  - Ø 315 to 500: 10 m compacted to 60 cm.
- Bend radius: 0.6 D.
- A1 fire rating as per administrative order of 21 November 2002.

FIELD OF APPLICATION

- Connection from branch to terminal on any commercial building air conditioning or ventilation system.
- Operating temperature: -30 °C to +250 °C

RANGE

Ø (mm)	References	Discount family
80	11091901	*22*
100	11091902	*22*
125	11091903	*22*
150	11091904	*22*
160	11091905	*22*
200	11091906	*22*
250	11091907	*22*
315	11091908	*22*
355	11091909	*22*
400	11091910	*22*
450	11091911	*22*
500	11091912	*22*

Algaine accessories

FIELD OF APPLICATION

- Suspension and air tightness accessories for Algaine flexible ducts.
- Additional accessories on pages *Mounting Accessories*.

RANGE

Designation	References	Discount family
RAA, width 50 mm, roll of 50 m	11091013	*22*
RAP, roll of 33 m	11091009	*22*
Multi-purpose collars Ø 60-215 mm, bag of 25	11090024	*22*
Multi-purpose collars Ø 60-540 mm, bag of 25	11090026	*22*
Perforated strip 17 mm, roll of 25 m	11090049	*22*

Thermally-insulated Algaine aluminium

DESCRIPTION

• Internal duct made of perforated aluminium algaine; 25 mm glass fibre insulation; reinforced aluminium casing on the outside.
• Packaging: 10 m compacted into 1.2 m.
• Bend radius: 0.6 D +25 mm.

FIELD OF APPLICATION

• Thermally-insulated connection from the branch to the terminal (for heat recovery, air conditioning, forced air heating, etc.) for all commercial ductwork.
• A1 fire rating as per administrative order of 21 November 2002.
• Operating temperature: -30 °C to +250 °C

RANGE

Ø (mm)	References	Discount family
80	11091915	22
100	11091916	22
125	11091917	22
150	11091918	22
160	11091919	22
200	11091920	22
250	11091921	22
315	11091922	22
355	11091923	22
400	11091924	22
450	11091925	22
500	11091926	22

Soundproofed Algaine aluminium

DESCRIPTION

• Internal duct made of perforated aluminium algaine; 25 mm glass fibre acoustic insulation; reinforced aluminium casing on the outside.
• Packaging: 10 m compacted into 1.2 m.
• Bend radius: 0.6 D +25 mm.

FIELD OF APPLICATION

• Sound-proofed connection from branch to terminal for all commercial building ductwork.
• Class A1 interior.
• Operating temperature: -30 °C to +250°C.
•A1 fire rating inner duct under administrative order of 21 Nov. 2002

RANGE

Ø (mm)	References	Discount family
80	11091930	22
100	11091931	22
125	11091932	22
150	11091933	22
160	11091934	22
200	11091935	22
250	11091936	22
315	11091937	22
355	11091938	22
400	11091939	22
450	11091940	22
500	11091941	22

ACOUSTIC ATTENUATION

• Attenuation in dB, measured according to ISO 7235.

	Central frequency of octave band (Hz)							
Ø (mm)	**63**	**125**	**250**	**500**	**1000**	**2000**	**4000**	**8000**
80	4	8	12	22	24	21	13	12
100	3	8	12	21	24	20	11	10
125	2	6	10	21	23	19	10	9
150	2	6	10	18	22	17	10	8
160	2	6	8	18	20	17	10	8
200	2	5	6	15	18	16	10	7
250	2	5	6	12	13	10	9	6
315	1	4	5	10	9	8	7	5
355	1	3	3	8	8	7	6	5
400	0	2	3	7	7	6	6	4
450	0	1	3	6	7	5	4	3
500	0	1	2	6	6	4	3	2

Aesthetic roof outlet: STE

ADVANTAGES

• Aesthetics similar to traditional chimneys.
• Removable base unit and roof outlet to facilitate installation (except flat roof model).
• Subframe body includes duct fastening system.

RANGE

Designation	References	Discount family
Steel tray roof / flat roof / slate roof		
STE 125-160	11030130	***23***
STE 200-315	11030133	***23***
STE 355-500	11030135	***23***
STE 560-630	11030136	***23***
Tile roof (with aluminium/elastomer air tightness kit)		
STE 125-160	11030137	***23***
STE 200-315	11030140	***23***
STE 355-500	11030142	***23***
STE 560-630	11030143	***23***

•To specify when ordering:
- the slope (in % or degrees) and type of the roof,
- the steel tray design if there is one
- if there are tiles, the sealing kit's color.
- if the roof is made of another material.
- the paint finish (5 finishes available).

DESCRIPTION

• Made of galvanised steel.
• Four models for all diameters up to 630 mm.
• Available in steel tray / flat roof / slate or tile models.
• Available in five different colours.

FIELD OF APPLICATION

• Aesthetic roof outlet for ventilation and air conditioning systems in multi-dwelling residential and commercial buildings.
• Used for both air intake and air exhaust.
• Kitchen hood exhaust possible.

INSTALLATION

• Dry installation on all types of roof:
- Extendible aluminium / elastomer airtight base frame for tiled roofs,
- galvanised steel base frame for slate or flat roofs.
- galvanised airtight base frame for steel tray roofs with cladding (model and dimensions of steel tray required).
• The base frame is movable to facilitate installation on site (except for monoblock flat roof unit).
• Fixed in place using four brackets screwed to the roof structure.
• Adjustable fastening collar for ventilation duct to adjust to various diameters.

DETAILS

• Five paint finishes available:
- black, dark red, brick, chamois brown, ochre.
• To guarantee better optimum air tightness, use an RCC or RPC for 125, 200, 250, 355, 400, 450, 560 size ducts.

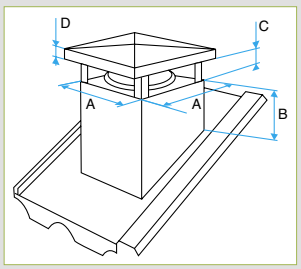

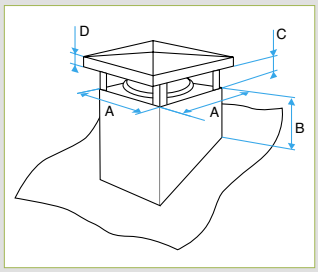

Designation	Section A	Section B	Section C	Section D	Outlet diameter (mm)
STE 125-160	200 x 200	160	110	20	160
STE 200-315	370 x 370	200	240	35	315
STE 355-500	600 x 600	350	340	35	500
STE 560-630	700 x 700	400	415	35	630

Standard roof outlet: STS

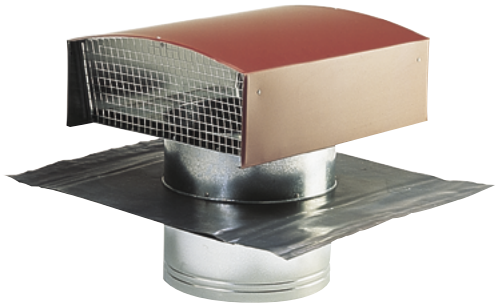

RANGE

Designation	References	Discount family
Curved roof		
STS 160	11030145	*23*
STS 200	11030146	*23*
STS 250	11030147	*23*
STS 315	11030148	*23*
STS 400	11030150	*23*
Slate roof		
STS 160	11030110	*23*
STS 200	11030111	*23*
STS 250	11030112	*23*
STS 315	11030113	*23*
STS 355	11030114	*23*
STS 400	11030115	*23*
STS 450	11030116	*23*
STS 500	11030117	*23*
STS 630	11030118	*23*
Tile roof		
STS 160	11030108	*23*
STS 200	11030100	*23*
STS 250	11030101	*23*
STS 315	11030102	*23*
STS 355	11030103	*23*
STS 400	11030104	*23*
STS 450	11030105	*23*
STS 500	11030106	*23*
STS 630	11030107	*23*

DESCRIPTION

• The STS roof outlet is made of galvanised steel.
It comprises:
1 - a rotating rain hood fitted with a protective screen (removable),
2 - a roof support plate fitted with four fastening strips,
3 - a duct connection shaft.
• Finish:
- slate model: smooth anthracite grey paint (RAL 7024),
- tile model: smooth brick paint (RAL 8012).

FIELD OF APPLICATION

• Roof outlet for ventilation and air conditioning systems in multi-dwelling residential and commercial buildings.
• Used for both air intake and air exhaust.
• Kitchen hood exhaust possible.

DIMENSIONS (MM)

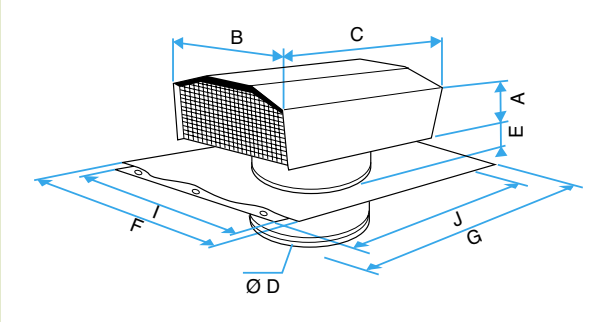

Designation	A	B	C	Ø D	E	F	G	I	J
STS 160	65	248	300	160	82	500	400	-	-
STS 200	100	333	400	200	82	600	600	500	500
STS 250	100	333	400	250	82	600	600	500	500
STS 315	112	420	500	315	82	600	600	500	500
STS 355	200	550	660	355	160	900	750	600	750
STS 400	200	550	660	400	160	900	750	600	750
STS 450	200	550	660	450	160	900	750	600	750
STS 500	245	650	850	500	160	1200	1000	780	997
STS 630	320	780	1000	630	160	1200	1000	780	997

INSTALLATION

• All types of roof: air tightness ensured by lead apron kit.
• STS ø160mm: the metal sleeve allowing the connection to the ventilation duct is connected with the lead sheet in order to achieve the sealing.
- Place the clipped rain-cover on the sleeve.
- Form the lead sheet by matching the reliefs while avoiding the edges of the crimping.
- If it's a tile cover, it's preferable to make a wedging in the direction of the battens in order to support the sheet lead,
- Install the rain cover with air flow perpendiculary to the slope of the roof.

Mesh rain hood

RANGE

Ø	References	Discount family
100	11094885	22
125	11094884	22
160	11094892	22
200	11094893	22

Ø	References	Discount family
250	11094894	22
315	11094895	22
355	11094883	22
400	11094882	22

Ø	References	Discount family
450	11094881	22
500	11094896	22
560	11094880	22
630	11094879	22

FIELD OF APPLICATION

- Standard wall outlet for any ventilation / air conditioning ductwork.
- Rain hood for horizontal discharge.
- Prevents access to ductwork (by birds, etc.).

INSTALLATION

- Note: male accessory not directly compatible with fan unit outlets: use specific hoods or use a female connector.

Conical duct cowl

RANGE

Ø	References	Discount family
100	11094761	22
125	11094762	22
160	11094763	22
200	11094764	22

Ø	References	Discount family
250	11094765	22
315	11094766	22
355	11094767	22
400	11094768	22

Ø	References	Discount family
450	11094769	22
500	11094770	22
560	11094771	22
630	11094772	22

DESCRIPTION

- Protective screen
- Fixed to vertical duct:
  - min. 3 screws up to Ø 160 mm
  - min. 4 screws up to Ø 315 mm
  - min. 6 screws up to Ø 630 mm.

FIELD OF APPLICATION

- Basic roof outlet for all ventilation ductwork.
- Rain hood for vertical discharge.
- Prevents access to ductwork (birds, etc.).

Aluminium adhesive tape: RAA

DESCRIPTION

- 40 micron aluminium tape coated with acrylic adhesive and silicone separations.
- Extension: 5 %
- Temperature range: -20 °C to +110 °C.
- Class C as per administrative order of 21 Nov. 2002.

FIELD OF APPLICATION

- Final air tightness on junctions (same-plane junctions preferred due to short stretching distance).
- Aesthetic finish.

RANGE

Designation	References	Discount family
RAA, width 50 mm, roll of 50 m	11091013	***22***
RAA, width 75 mm, roll of 50 m	11091004	***22***

Fabric adhesive tape: RAV

DESCRIPTION

- Fibre fabric coated with silver polythene film on the outside and a powerful adhesive on the inside.
- Width: 50 mm.
- Extension: 30 %
- Temperature range: -50 °C to +110 °C.
- High yield strength.

FIELD OF APPLICATION

- Final air tightness on all junctions after fitting.

RANGE

Designation	References	Discount family
RAV, roll of 50 m	11091010	***22***

PVC adhesive tape: RAP

DESCRIPTION

- Grey PVC tape coated with powerful, flexible adhesive.
- Width: 50 mm.
- Extension: 180 %
- Temperature range: -5 °C to +70 °C

FIELD OF APPLICATION

- Final air tightness of junctions (ideal for connecting flexible ducts due to its high stretching capacity).

RANGE

Designation	References	Discount family
RAP, roll of 33 m	11091009	***22***

Sealing putty

ADVANTAGES

• Practical: hands and tools are washed with water before drying.
• Fully replaced neoprene sealant.

DESCRIPTION

• Grey water-based sealant, solvent-free (non-inflammable, non-toxic).
• Application temperature: 5 °C to 25 °C.
• Resists temperature from: -20 °C to +70 °C.
• Drying time: 15 min. for formation of skin. 24 hours fully dry.
• M1 class.
• Stored in frost-protected room

FIELD OF APPLICATION

• Final air tightness on junctions before and after fitting.
• The acrylic sealant is flexible and elastic after drying, offering good tolerance of mechanical variations in junctions.

RANGE

Designation	References	Discount family
Cartridge of acrylic sealant, 310 ml	11091018	*22*
Acrylic sealant, 1 kg pot	11091077	*22*
Acrylic sealant, 6 kg pot	11091078	*22*

Silicone adhesive sealant

DESCRIPTION

• Translucent, thick, non-runny silicone paste
• Temperature resistance: -65 °C to +250; +275 °C peak.

FIELD OF APPLICATION

• Fixation and air tightness of gas ventilation components.

RANGE

Designation	References	Discount family
Cartridge of silicone adhesive sealant, 310 ml	11090053	*22*

Aluminium putty tape: RAF

ADVANTAGES

Built-in mastic sealant for air tightness.

DESCRIPTION

• 0.1 mm aluminium tape coated with an elastomer offering high vulcanisation power at normal temperature.
• Width: 50 mm.
• Excellent water resistance.
• Extension: 30 %
• Temperature range: -20 °C to 70°C.
• Class C as per administrative order of 21 Nov. 2002.

FIELD OF APPLICATION

• Final air tightness of junctions (ideal for outdoor ductwork).
• Aesthetic finish.

RANGE

Designation	References	Discount family	Pack. 1
RAF, roll of 15 m	11091042	*22*	6

Galvanised anti-vibration universal collar CU

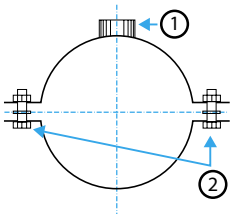

1: ø Crimped M8 nut
2 : Screw and crimped nut with unlosable washer

RANGE

Ø	References	Discount family
80	11091062	22
100	11091061	22
125	11091060	22
160	11091059	22
200	11091058	22
250	11091057	22

Ø	References	Discount family
315	11091056	22
355	11091055	22
400	11091054	22
450	11091053	22
500	11091052	22
560	11091051	22

Ø	References	Discount family
630	11091050	22
710	11091141	22
800	11091142	22
900	11091143	22

DESCRIPTION

- Supplied individually with fastenings.
- M8 base nut.
- M6 screw.
- Practical closure.

FIELD OF APPLICATION

- Supports ducts and accessories.
- Absorbs vibrations through the rubber seal.

Support base for flat roof: PST

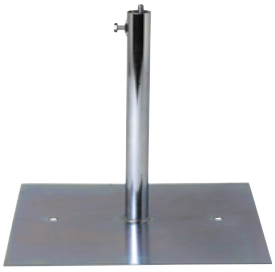

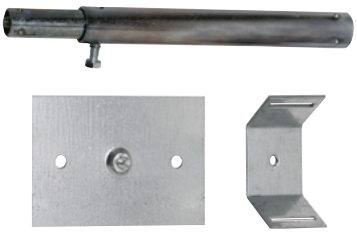

ADVANTAGES

- *Delivered as a boxed kit for easier handling.*
- *Fitted with a universal collar (CU) or perforated strip.*

COMPLIANCE(S)

- *The large plate PST is compliant with French DTU 68.3 P1-1-2 §7.4.6.5.3 which requires a plate surface of 900 cm² for collective use.*

RANGE

Designation	References	Discount family
Adapters for perforated strips, bag of 10	11091096	22

Designation	References	Discount family
Flat roof support base plate 150 x 100 mm	11091099	22

Designation	References	Discount family
Flat roof support base plate 300 x 300 mm	11091125	22

DESCRIPTION

- Supplied in kit form: screw-fit plate and base.
- Adjustable base height:
- The PST is installed either with an insulated universal collar (CU) with the same diameter as the supported duct (2 PST + CU for a 3m bar), or with the perforated strip by adding adapter 11091096.

FIELD OF APPLICATION

- Supports circular ductwork on flat roofs
- The large plate PST satisfies the requirements concerning multi-dwelling residences for a plate surface of 900 cm².

Quick suspension cable

ADVANTAGES

• Quick and easy to install: on average 30 % time savings in relation to perforated strip suspensions.
• Aesthetic design.

RANGE

Designation	References	Discount family
Packaged in bags of 10 pieces		
Quick Susp. 2 m 0-10 kg	11091063	*22*
Quick Susp. 2 m 0-45 kg	11091064	*22*
Quick Susp. 3 m 0-45 kg	11091065	*22*
Quick Susp. 5 m 0-45 kg	11091093	*22*
Packaged in bags of 100 pieces		
Plug-less concrete fastening hooks, bag	11091095	*22*

DESCRIPTION

• Flexible steel cable fitted with loop at one end. The other end slides through the locking device, which enables you to reposition the supported element during and after its installation.
• All parts are made of galvanised steel.
• HK hook:
- plugless fastening hood for solid or aerated concrete slab, hollow bricks, etc.,
- stainless steel hook fixed in an M8 hole,
- working load: 75 kg.

FIELD OF APPLICATION

• Suspension of circular, oblong and rectangular air ductwork.
• Suspension of small fan units, convector fans.
• Suspension and securing of plenums + diffusers.

INSTALLATION

• Installation:
1) Firstly pass the cable around a structural element then through the loop.
2) Pass the cable through a groove in the locking device.
3) Pass the cable round the duct then through the other groove in the locking device.

• Tool supplied to unlock and adjust the height.

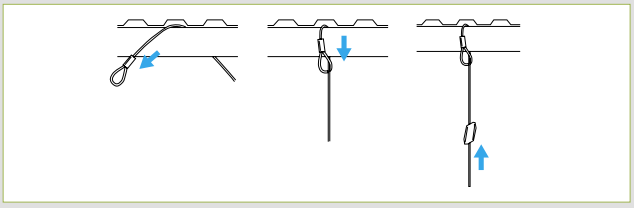

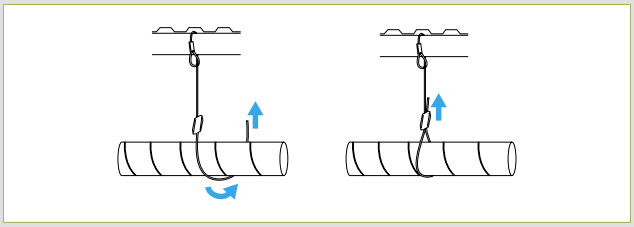

Cable	Thickness	Admissible load	Type of use
N°1	1.2 mm	0-10 kg	securing plenums; ductwork Ø < 200mm
N°2	2 mm	10 - 45 kg	All ductwork

Perforated strip

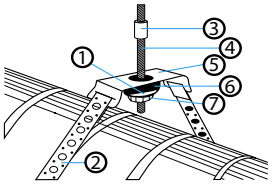

1: washer
2: perforated strip
3: spacer
4: threaded rod
5: tube support bracket
6: Rubber mounting nut
7: Nut

DESCRIPTION

• Perforated strip 0.6 mm with width 17 mm:
- maximum admissible load (3 m bar): Ø 500 mm.
• Perforated strip 0.8 mm with width 25 mm:
- maximum admissible load (3 m bar): Ø 560 mm.

FIELD OF APPLICATION

• Used to suspend air ductwork elements
• Quick and economical solution.

RANGE

Designation	References	Discount family
Perforated strip 17 mm, roll of 25 m	11090049	*22*
Perforated strip 25 mm, roll of 25 m	11091019	*22*

Suspension brackets

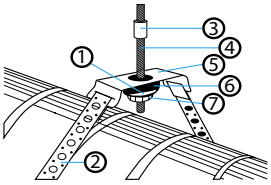

1: washer
2: perforated strip
3: spacer
4: threaded rod
5: tube support bracket
6: Rubber mounting nut
7: Nut

FIELD OF APPLICATION

- Suspension brackets for ducts.
- Attachment brackets for threaded rods.

INSTALLATION

- It is recommended to use an anti-vibration mounting for the connection with the threaded rod.
- Tube support bracket: suspends the duct using a metal strip.
- Cambered and right angle bracket: side suspension of the duct or fastening of a threaded rod to a vertical wall (right angle) or horizontal wall (cambered bracket).

RANGE

Designation	References	Discount family
Right-angle suspension brackets, bag of 50	11091023	22
Cambered suspension brackets, bag of 50	11091024	22
Tube support brackets, bag of 50	11091025	22

Attachment clamp for threaded rods

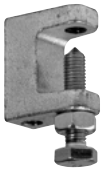

DESCRIPTION

- Clamp attachment with smooth Ø9 mm hole.

FIELD OF APPLICATION

- Attaches threaded rods to IPN girders

RANGE

Designation	References	Discount family
Attachment clamp	11091030	22

Rubber mountings

FIELD OF APPLICATION

- Anti-vibration mountings to separate the supporting element from the supported element.

INSTALLATION

- The element supporting the duct must rest on the mounting.

RANGE

Designation	References	Discount family
Rubber mountings; bag of 50	11091026	22

Threaded rod

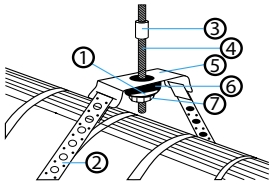

1: washer
2: perforated strip
3: spacer
4: threaded rod
5: tube support bracket
6: Rubber mounting nut
7: Nut

FIELD OF APPLICATION

- Used to suspend ductwork from ceilings

INSTALLATION

- Attached using accessories for threaded rods.
- See illustration for use with perforated strip.

RANGE

Designation	References	Discount family
M8 threaded rod, set of 10 x 1m	11091035	22
M8 spacers, bag of 50	11091032	22

Mounting rail

DESCRIPTION

- Connection and junction with threaded rods, collars, etc. using the rail accessories.
- Maximum admissible load at 1 point:
  - 41/21 for thickness of. 1.5; 90 kg for L 500 mm.
  - 41/41 thickness 1.5; 270 kg for L 500 mm.
  - 41/41 thickness 2.5; 380 kg for L 500 mm.

FIELD OF APPLICATION

- Supports both circular and rectangular ducts

RANGE

Designation	References	Discount family
Support rail - 41/21 thickness 1.5 length 2 m.	11091068	***22***
Support rail - 41/41 thickness 1.5 length 2 m.	11091069	***22***
Support rail - 41/41 thickness 2.5 length 2 m.	11091070	***22***

Wall bracket

DESCRIPTION

- Maximum admissible load over whole length:
  - bracket 41/21 Lg 300 mm: 70 kg,
  - bracket 41/41 Lg 450 mm: 140 kg,
  - bracket 41/41 Lg 600 mm: 150 kg.

FIELD OF APPLICATION

- Supports both circular and rectangular ducts
- Supports fan units.

RANGE

Designation	References	Discount family
Bracket 41/21 Lg 0.30 m	11091071	***22***
Bracket 41/41 Lg 0.45 m	11091072	***22***
Bracket 41/41 Lg 0.60 m	11091073	***22***

Cable stirrup and rail connection 90° brackets

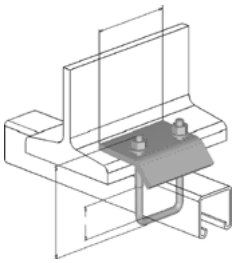

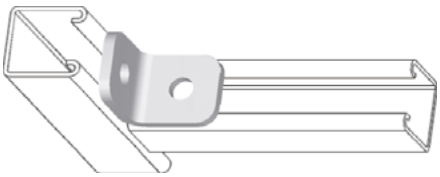

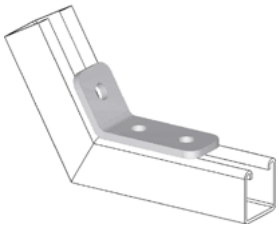

FIELD OF APPLICATION

- Stirrup: fastens rails to IPN girders.
- Brackets: used to attach mounting rails.

INSTALLATION

Compatible with 41/21 and 41/41 rails.

- Stirrup: use two on each IPN girder.
- Brackets: diameter 13 mm. The brackets are attached with an M8 threaded plate + M8 hex head screws or directly using a double nut attachment.

RANGE

Designation	References	Discount family
Cable stirrup for 41/21 or 41/41 rail	11091089	***22***
90° bracket for rail	11091091	***22***

M8 accessories for rails: threaded plate and double nut

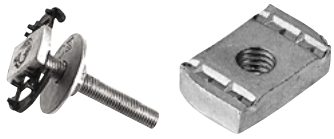

FIELD OF APPLICATION

- Threaded plate: used to attach M8 threaded rods or construction brackets to the rail.
- Double nut: attachment to a rail or a wall bracket (41/21 and 41/41) (e.g. collar).

RANGE

Designation	References	Discount family
M8 threaded plate	11091087	22
Double nut attachments M8 x 40, box of 25	11091088	22

M8 accessories: screws, washers, nuts and plugs

FIELD OF APPLICATION

- Additional fastening accessories for perforated strips, collars and support rails.
- Large washer: specific to attachment of rails and brackets.

RANGE

Designation	References	Discount family
M8 nuts, bag of 100	11091029	22
Hex head screws M8 x 25, box of 500	11091039	22
M8 metal plugs, bag of 50	11091045	22
Large washers M8 x 35, bag of 100	11091090	22

Self-tapping screws

DESCRIPTION

- Square sunken-head screws.

FIELD OF APPLICATION

- Fastening of ductwork components.

RANGE

Designation	References	Discount family
Square head self-tapping screws Ø4.2 mm, L 13 mm, box of 500	11091148	22
Square head self-tapping screws Ø4.2 mm, L 19mm, box of 500	11091149	22

Caps kit

DESCRIPTION

- Caps or magnetic caps holder for square head screws.

RANGE

Designation	References	Discount family
Square magnetic bit holder kit + 3 mm square bit	11091147	22
Square screw bits, bag of 10	11091150	22

Multi-purpose clamp collar

ADVANTAGES

- *Pre-cut clamp collar.*
- *Four models to cover up to Ø500 mm. Saves time on installation.*

DESCRIPTION

- Pre-cut circular collar for several diameters.
- Four models for diameters from 80 mm to 500 mm.
- Crenelated 9 mm strap + clamp collar.

FIELD OF APPLICATION

- Clamps flexible ducts on rigid accessories without shearing.

RANGE

Designation	References	Discount family
Multi-purpose collars Ø60-145 mm, bag of 25	11090023	22
Multi-purpose collars Ø60-215 mm, bag of 25	11090024	22
Multi-purpose collars Ø60-370 mm, bag of 25	11090025	22
Multi-purpose collars Ø60-540 mm, bag of 25	11090026	22

Locking strap and collar

DESCRIPTION

- Corrugated 9 mm strap in 30 m roll.
- Clamp collar x 50.

FIELD OF APPLICATION

- Clamps flexible ducts on rigid accessories without shearing.

RANGE

Designation	References	Discount family
9 mm locking strap, roll of 30 m	11090029	22
Clamp collars, bag of 50	11090031	22

Wire clamp collar CSF

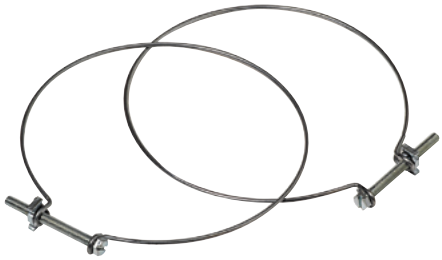

DESCRIPTION

- Supplied in bags of 10.

FIELD OF APPLICATION

- Clamps flexible ducts.

RANGE

Designation	References	Discount family
CSF Ø80 mm (set of 10)	11094651	22
CSF Ø100 mm (set of 10)	11094652	22
CSF Ø125 mm (set of 10)	11094653	22
CSF Ø160 mm (set of 10)	11094654	22
CSF Ø200 mm (set of 10)	11094655	22
CSF Ø250 mm (set of 10)	11094656	22
CSF Ø315 mm (set of 10)	11094657	22
CSF Ø355 mm (set of 10)	11094658	22
CSF Ø400 mm (set of 10)	11094659	22

Slab penetration seal: JTD

DESCRIPTION

- Natural rubber-based particle mattress.
- Temperature resistance = max. +100 °C.
- Roll of 1 m x 0.25 m.

FIELD OF APPLICATION

- Separates ducts from floor slabs or walls.
- Absorbs structure-borne vibrations.

RANGE

Designation	References	Discount family
Slab penetration seal in roll	11090046	*22*

Adhesive slab penetration seal in roll

ADVANTAGES

- *Quick installation: fixed directly to the duct.*

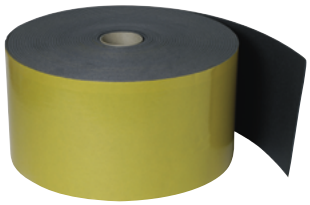

DESCRIPTION

- Resilient polyethylene foam mattress, with adhesive backing.
- Roll of 25 m x 220 mm

FIELD OF APPLICATION

- Separates ducts from floor slabs or walls.
- Absorbs structure-borne vibrations.

RANGE

Designation	References	Discount family
Adhesive slab penetration seal in roll, width 220 mm	11090054	*22*

Foam adhesive sealing tape in roll

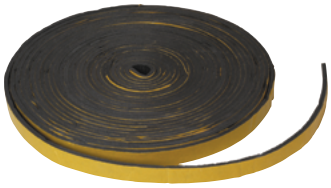

DESCRIPTION

- Polyethylene foam tape with adhesive backing.
- Density 30 kg/m³.
- Roll of 20 m x 20 mm; thickness 5 mm

FIELD OF APPLICATION

- Separates junctions and ensures air tightness between ducts and accessories, grilles, plenums, etc.

RANGE

Designation	References	Discount family
Adhesive foam seal roll, width 20 mm, 5 mm thick	11091040	*22*

MS PRO: airtight flexible sleeve

ADVANTAGES

- *New generation of Aldes patented fan-ductwork sleeves.*
- *Quick to install: built-in rigid connectors.*
- *Air tightness: half as many leaks as traditional flexible sleeves.*
- *Durable: silicon sleeve, weather-resistant.*

COMPLIANCE(S)

- *Fire rating A2-s1,d0.*
- *CETIAT test No. 1214081.*

RANGE

Ø	Référence	Prix	Famille de remise
125	11094660	**36,8**	***22***
160	11094295	**69,7**	***22***
200	11094296	**78,8**	***22***
250	11094297	**89,4**	***22***
315	11094298	**98,4**	***22***

Ø	Référence	Prix	Famille de remise
355	11094299	**114**	***22***
400	11094300	**124**	***22***
450	11094661	**152**	***22***
500	11094301	**166**	***22***

DESCRIPTION

- Flexible sleeve incorporating a rigid female connector and an air tightness seal at each end.
- Airtight female connections: direct interlocking in fan unit branch, connects to an accessory (bend, RPC or female connector, etc.) on the ductwork.
- Silicon-coated sleeve: better resistance to UV and to tearing, better air tightness.
- A2-s1,d0 fire rated product.
- Air tightness.
- Operating ranges: - Pressure: 0 - 2,500 Pa,
  - Continuous temperature: -30 °C to +250 °C,
  - Peak temperature: max. +400 °C.

FIELD OF APPLICATION

- Separation of fan-duct or duct-duct connections.
- Airtight connection extending performance of rigid sealed ductwork.
- Improved durability (silicon-coated sleeve).

Flexible sleeve in roll

COMPLIANCE(S)

- *Class M0: report LYC3937L.*

DESCRIPTION

- Band of grey glass fibre crimped between 2 galvanised steel sleeves; M0 fire rating.
- Supplied in 30.5 m roll.
- Pressure resistance: max. 1500 Pa.
- Temperature range: + 130°C

RANGE

Designation	References	Discount family
M0 flexible sleeve, 240 mm width	11091066	***22***
M0 flexible sleeve, 150 mm width	11091067	***22***

FIELD OF APPLICATION

- Connection of ductwork elements (accessories, fan units, cabinets, etc.).
- Used to separate a fan unit or cabinet from the rest of the ductwork.

Flexible connection: RS

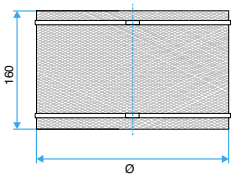

COMPLIANCE(S)

- *Class M0: report LYC3937L.*

RANGE

Ø	References	Discount family
125	11096932	***22***
160	11096933	***22***
200	11096934	***22***
250	11096935	***22***

Ø	References	Discount family
315	11096936	***22***
355	11096937	***22***
400	11096938	***22***
450	11096939	***22***

Ø	References	Discount family
500	11096940	***22***
560	11096941	***22***
630	11096942	***22***

DESCRIPTION

- Comprises a flexible fabric sleeve pre-formed to the right diameter and two 9 mm clamp collars.
- Class M0.

FIELD OF APPLICATION

- Flexible sleeve for connecting:
  - ducts or accessories,
  - fan vents or discharge, etc.

«SMART access» circular access hatch

ADVANTAGES
- *Quick opening/closing system*
- *Easy access to ductwork*

COMPLIANCE(S)
- *M1 fire rating*
- *CETIAT 1214081 report*

FIELD OF APPLICATION
- Unables a quick access for circular ductworks maintenance
- Inner seal ensures air tightness

RANGE

Designation	Ø	Weight	References	Discount family
Access hatch 185 x 85	125	**0.250**	11091835	***22***
Access hatch 185 x 85	160	**0.244**	11091836	***22***
Access hatch 300 x 100	200	**0.500**	11091837	***22***
Access hatch 300 x 100	250	**0.500**	11091838	***22***
Access hatch 300 x 100	315	**0.475**	11091839	***22***
Access hatch 400 x 200	400	**1.100**	11091841	***22***
Access hatch 400 x 200	450	**1.100**	11091842	***22***
Access hatch 400 x 200	500	**1.100**	11091843	***22***
Access hatch 500 x 400	630	**4.250**	11091845	***22***
Access hatch 400 x 200	355	**1.100**	11091846	***22***
Access hatch 500 x 400	560	**4.250**	11091847	***22***

SMART access RM male connector with hatch

INSTALLATION
- Use the provided pattern to cut the duct
- Quick closing by compression

DESCRIPTION
- Sealed male connector with built-in inspection hatch.
- Hatch dimensions compliant with NF EN 12097: 185 x 85 mm for Ø125 and 160; 300 x 100 mm pour 200 to 315.
- C Class air tightness.

FIELD OF APPLICATION
- Used to connect two ducts together, features a built-in inspection hatch.
- Simplifies respect of standard NF EN 12097 on new ductwork.

RANGE

Ø	References	Discount family
125	11093056	***22***
160	11093057	***22***
200	11093058	***22***
250	11093059	***22***
315	11093060	***22***

Access hatches for flat duct surfaces

FIELD OF APPLICATION
- Unables an access for rectangular or oblong ductworks maintenance
- Inner seal ensures air tightness

INSTALLATION
- Use the provided pattern to cut the duct.
- Quick closing by compression.

RANGE

Designation	References	Discount family
Access hatch 250 x 150 PP	11091850	***22***
Access hatch 300 x 200 PP	11091851	***22***
Access hatch 400 x 300 PP	11091852	***22***
Access hatch 500 x 400 PP	11091853	***22***

AIR DIFFUSION

Small terminals . . . . . p. 348
Indoor grilles . . . . . p. 352
Diffusers . . . . . p. 368
Outdoor grilles . . . . . p. 400
Selection tables . . . . . p. 408

TWISTED

SWIRL DIFFUSERS

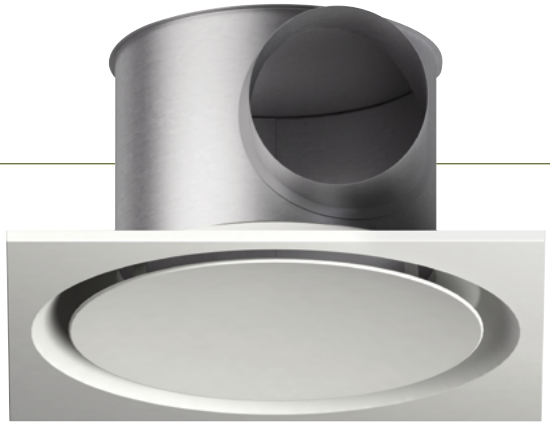

- Can be installed to replace a suspended ceiling tile 600 x 600 mm or 675 x 675 mm.
- Delivered with its dedicated plenum.
- Ideal for integration in most commercial decorative themes.
- Ideal for variable airflow systems.
- Excellent mixing rate.
- Accepts high temperature differentials.
- Identical models for air supply and exhaust.
- Easy access to the filter on the exhaust model.

→ Page 387

AldesArchitect™ Collection **p. 346**

SMALL TERMINALS

Selection guide **p. 342**

Small metal terminals

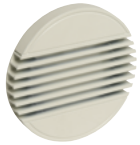

BIM2 300 and 320
p. 348

BEM 780
p. 349

Core terminals
p. 350

INDOOR GRILLES

Indoor grilles

Single and double deflection terminals
p. 352

Terminals for circular ducts
p. 354

Terminals with aluminium fixed front bars GRIDLINED
p. 356

Fixed-vane terminals
p. 360

Fixed-screen terminals
p. 361

Pressed terminals
p. 362

Terminals with built-in damper
p. 363

Fixed-vane terminals with filter
p. 364

Fixed-vane terminals for 600x600 mm ceiling tiles
p. 365

Terminals with fixed air transfer vanes
p. 367

DIFFUSERS

Ceiling diffusers

Fixed circular diffusers
p. 368

Adjustable circular diffusers
p. 370

Square perforated sheet diffusers
p. 372

Square removable - core diffusers
p. 375

Square multi-slot diffusers
p. 378

Slot diffusers

New

Diffusers with adjustable aluminium slots
p. 381

Diffusers with fixed aluminium slots
p. 385

Swirl diffusers

Square adjustable/fixed swirl diffusers
p. 386

Twisted swirl jet diffusers TWISTED
p. 387

Adjustable circular swirl jet diffusers
p. 389

SR 861 series - steel
p. 391

Special diffusers

Rotating nozzle diffusers
p. 393

Displacement diffusers
p. 396

Long-range jet diffusers
p. 398

OUTDOOR GRILLES

Outdoor grilles

Overpressure dampers
p. 400

Small and big outdoor terminals
p. 403

Penthouses
p. 406

Outdoor circular terminals
p. 407

Selection tables **p. 408**

Selection guide for diffusers

++ Optimum comfort and efficient system
\+ Acceptable comfort and acceptable system
– Only to be used after in-depth diffusion requirements analysis

CEILING HEIGHT (CH) < 3 M

Applications	Diffusion units			System upline of diffuser		
	Range	Reference model		Ventilation	Air conditioning unit	Fan coil unit
Supply air on wall	Small terminals Mixing rate 1 - 6		BIM2 320	++	+	–
	Adjustable-vane terminals Mixing rate 4 - 10	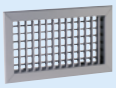	SC 102 D	++	++	+
	Terminals with fixed front bars Mixing rate 4 - 10		GRIDLINED WALL	++	++	++
	Terminals with fixed front bars for floor mounting Mixing rate 4 - 10		GRIDLINED FLOOR	++	+	+
	Terminal with fixed linear front bars (L/H ≥ 10) Mixing rate 4 - 15		WALL	+	++	++
	Transfer grilles		AC 181	++	++	++
Supply air on ceiling	Small terminals Mixing rate 1 - 6		BIM2 320	++	+	–
	Core terminals Mixing rate 1 - 4		SR 135	++	–	–
	Circular fixed air jet diffusers for ceiling tiles Mixing rate 6 - 10		SC 832 TP	++	+	–
	Circular adjustable air jet diffusers for ceiling tiles Mixing rate 6 - 25		A 842 TP	+	++	++
	Square multi-direction diffusers for ceiling tiles Mixing rate 6 - 20		SF 704 TP	+	++	++
	Multi-slot diffusers for ceiling tiles, supply + exhaust Mixing rate 6 - 22		ALD 610 K COMBINED	+	++	++

Selection guide for diffusers

++ Optimum comfort and efficient system
+ Acceptable comfort and acceptable system
– Only to be used after in-depth diffusion requirements analysis

CEILING HEIGHT (CH) < 3 M

Applications	Diffusion units			System upline of diffuser		
	Range	Reference model		Ventilation	Air conditioning unit	Fan coil unit
Supply air on wall	Square perforated sheet diffusers for ceiling tiles Mixing rate 6 - 20		SC 360 R	+	+	++
	Swirl air jet diffusers Mixing rate 6 - 28		SF 785	+	++	++
	Swirl air jet diffusers for ceiling tiles Mixing rate 6 - 32		Twisted 850	+	++	++
	Fixed linear diffusers Mixing rate 6 - 18	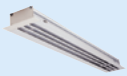	ALD 610 - 620	++	+	++
	Adjustable linear diffusers Mixing rate 6 - 20		LINED	+	++	++
Extract air on wall	Small terminals		BIM2 300	++	+	–
	Fixed-vane terminals		AC 121	++	+	+
	Fixed-vane terminal with filter		AC 163 W	++	+	+
Extract air on ceiling	Small terminals		BIM2 300	++	+	–
	Frameless terminals for tiles		AU 124	+	++	++
	Fixed-vane terminals with filter for tiles		AG 637 W	+	++	++

Air diffusion and comfort

DESCRIPTION

Dimensions

All terminal dimensions are given in nominal L x H values (mm).
L x H is the opening required in a duct or partition wall.

Symbols

Qv (m3/h) = Airflow
Vk (m/s) = Air speed at diffuser
Vt (m/s) = Final speed (at end of range)
Ak (m2) = Free air passage
Lw (NR) = Sound power level
DPt (Pa) = Total pressure loss
Lt (m) = Air jet range

Selection tables

The selection tables at the end of the catalogue provide the following information:
- nominal dimensions L x H (or D) and free air passage Ak,
- airflow Qv,
- the four values below.

Air jet ranges (Lt)

In most cases, for high wall-mounted terminals or ceiling-mounted diffuser with room heights of approx. 2.7 m, the range is considered as being the distance between the diffuser to the opposite wall, or mid-distance between two opposite diffusers with air jets that meet in the middle. For higher ceilings, we can add to this distance the difference between 3 m and the actual room height (here 0.3 m). As long as the vertical range Lv is less than or equal to half of the horizontal part Lh of the range. So Lt = Lh + Lv < 1.5 x Lh.
The range depends on the terminal speed (Vt) accepted to ensure comfort (see below).

Terminal speed (Vt)

Ranges are published for the optimal terminal speed in the air jet axis. This optimal speed is an experimental value giving the best comfort criterion for each type of terminal. The ranges for other terminal speeds are given in the form of correction factors. The extreme values represent the practical limits of application.

OCCUPIED AREA

The occupied area is defined as being limited by horizontal planes at 0.15 m and 1.8 m from the floor, and by vertical planes at 0.15 m from the walls.

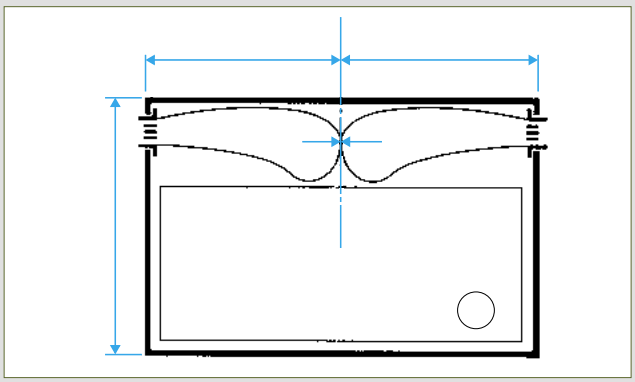

Wall terminals facing each other

REPRESENTATION OF AIR JETS

Occupied area

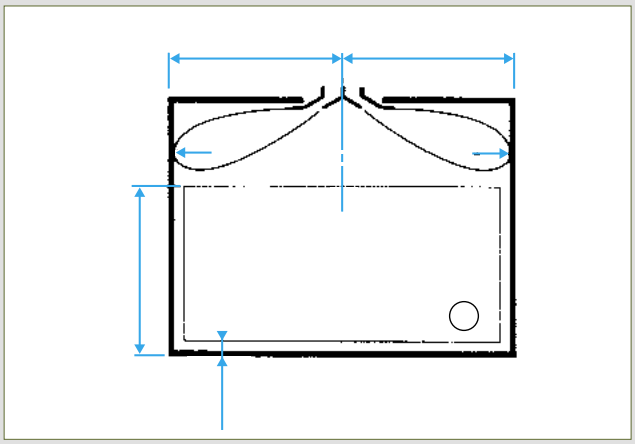

Ceiling diffuser

Fixing

USE

- F1: visible screw attachment in frame. Screws are not supplied.
- F3: concealed friction clip attachment.
- F5: concealed clasp attachment.

TYPE F1

Visible screws, fixed into the frame (screws not supplied)

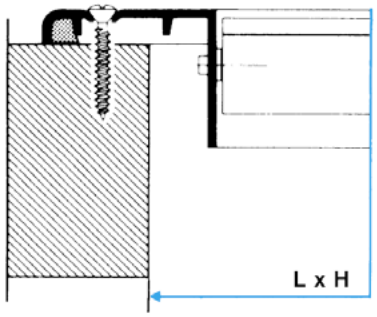

F1 attachment for
AC 161 and AC 163

TYPE F3

Friction clips and F4 mounting frame.
Not for ceiling mounting

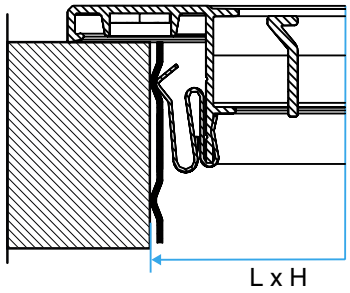

TYPE F5

Clasps with hidden screws
Assembly with F6 mounting frame.

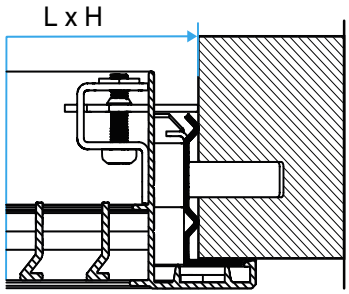

TYPE F6

Mounting frame suitable for F5 closures
Fitted to ME F5 or MT F5 plenum.

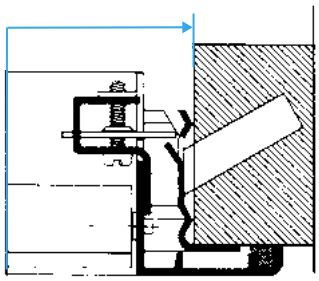

POSITION OF ATTACHMENTS

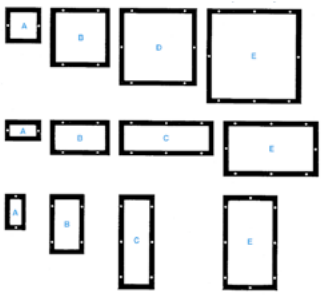

legende : Number of attachement points

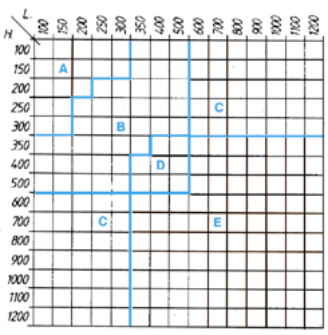

H \ L	100	150	200	250	300	350	400	500	600	700	800	900	1000	1100	1200
100															
150		A													
200															
250										C					
300					B										
350															
400							D								
500															
600															
700			C							E					
800															
900															
1000															
1100															
1200															

Mushroom head tapping
screw, cross-head
DIN 7983 Ø 3.5 x 38 mm

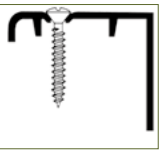

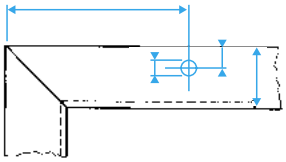

legende : Position of F1 attachment holes

AldesArchitect®

AIR DIFFUSERS AND SMOKE & HEAT EXHAUST GRILLES ALSO DESERVE TO BE ELEGANT AND HIGH-END

Essentielle range:

offers 100 RAL paint shades from stock.
MATT (30%+/-5%) or
SATIN-FINISH (70%+/-5%) shine.

Elégance range:

films or paint: metallic, brushed metal, wood or marble shades.

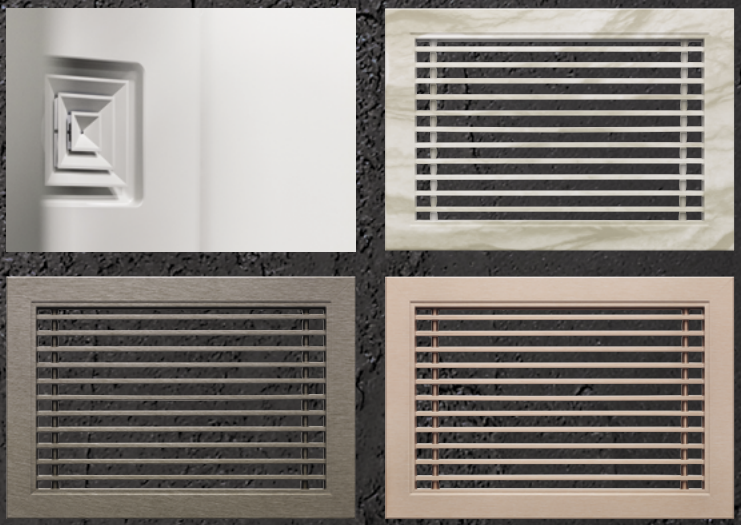

Exclusive range:

is a customised offer. Application of a totally customised pattern.

#HealthyLiving

aldes

Grilles & diffusers

AldesArchitect®

ADVANTAGES

- *A range of specific metallic colors (copper, bronze, chrome, etc.).*
- *Various trendy patterns available.*
- *Access to all available RAL colors.*
- *The creation of a totally personalized and exclusive color or design to your project.*
- *Tailor-made sizing to the nearest mm.*

RANGE

Designation	Grill colour	Added-value	Discount Family
Essentielle range			
RAL colour	Group 1	**+12%**	***10***
RAL colour	Group 2	**+14%**	***10***
RAL colour	Group 3	**+16%**	***10***
Elegance range			
Metallic tint	Bronze	**Consult us**	***10***
Metallic tint	Gun barrel	**Consult us**	***10***
Metallic tint	Champagne	**Consult us**	***10***
Metallic tint	Chrome	**Consult us**	***10***
Metallic tint	Copper	**Consult us**	***10***
Metallic tint	Gold	**Consult us**	***10***
Metallic tint	Shiny gold	**Consult us**	***10***
Brushed metallic tint	Brushed Bronze	**Consult us**	***10***
Brushed metallic tint	Brushed Gun Barrel	**Consult us**	***10***
Brushed metallic tint	Brushed Chrome	**Consult us**	***10***
Brushed metallic tint	Brushed Copper	**Consult us**	***10***
Mineral	Marble	**Consult us**	***10***
Exclusive range			
Tailor-made tint	-	**Consult us**	***10***

DESCRIPTION

New AldesArchitect® offer to customize Aldes air diffusers and smoke extraction grilles.
• 3 range available :
- **Essentielle** range: 100 RAL paint colors available in stock.
MAT (30% + / - 5%) or SATIN (70% + / - 5%) shine.
- **Elégance** range: in films or in paint; metallic shades, brushed metallic shades or marble.
- **Exclusive** range: the tailor-made offer allowing you to infinitely personalize your smoke evacuation diffusers and grilles (pattern or visual).

COMPATIBILITY ELEGANCE & EXCLUSIVE RANGES

- Wall grilles : **Gridlined Wall & Exhaust**
- Ceiling diffusers : **Lined, Lined Combined, Twisted**
- Smoke exhaust grilles : **GFE, GFE 007, GFA, GFA007, GGH.**

FIELD OF APPLICATION

- Supply and exhaust air for all ventilation and air conditioning applications and smoke extraction (smoke extraction grilles).
- Positioning on the wall or ceiling.

DIMENSION

- **Essentielle** range : Dimensional limits identical to those of the standard product.
- **Elégance** range :
  - Metallic colors: dimensional limits identical to those of the standard product.
  - Brushed metallic and mineral colors: 850 x 2000 mm max.
- **Exclusive** range :
  - Custom colors: dimensional limits identical to those of the standard product.
  - Custom designs: 850 x 2000 mm max.

ESSENTIELLE RANGE

ELEGANCE RANGE

METALLIC

Bronze

Gun barrel

Champagne

Chrome

Copper

Gold

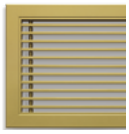
Shiny Gold

BRUSHED METALLIC

Bronze

Gun barrel

Chrome

Copper

MINERAL

Marble

EXCLUSIVE RANGE (EXAMPLES)

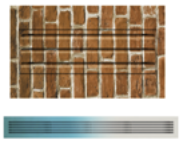

BIM2 300 - BIM2 320 Series - Aluminium

BIM2 300

BIM2 320

ADVANTAGES

- *Modern Aesthetic.*
- *Very nice finish.*
- *Easy mounting in all types of ceilings.*

RANGE

Dimensions	References	Discount family
BIM2 300		
D125	11052292	***10***
D160	11052293	***10***
D200	11052294	***10***
BIM2 320		
D125	11052297	***10***
D160	11052298	***10***
D200	11052299	***10***

DESCRIPTION

- Aluminium injected grille very nice finish.
- Deflection 0° for type 300 and 90° for the type 320.
- Powder coated white RAL 9010 matt 30% white.
- Fixing by clips in the dedicated metal sleeve.
- Mounting sleeve with tabs for quick installation, adapted to plasterboard ceilings.

FIELD OF APPLICATION

- Air supply and return for all exhaust or heat recovery applications in small non-residential buildings.
- BIM2 300: wall or ceiling-mounted (ceiling only for return).
- BIM 320: ceiling-mounted (supply only).

ACCESSORIES

- Mounting sleeve.

Dimensions	References	Discount family
D125	11053352	***10***
D160	11053353	***10***
D200	11053354	***10***

DIMENSIONS

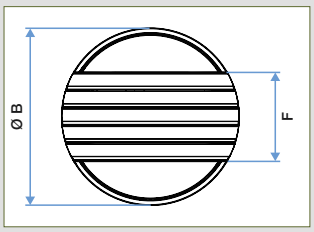

BIM2 300 and 320

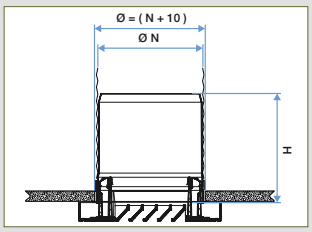

BIM2 300 and 320 with sleeve

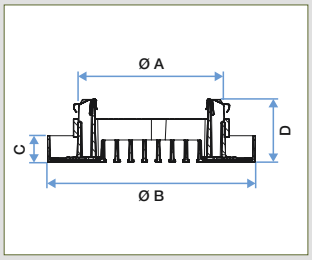

BIM2 300

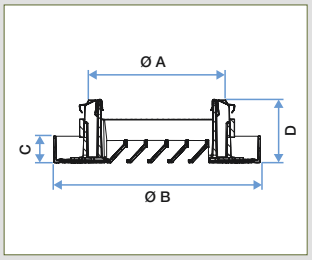

BIM2 320

Standard Dimensions (mm)							
Ø	**ØA**	**ØB**	**C**	**D**	**F**	**H**	**Q**
125	122	172	22	52	86	130	100
160	157	213	22	52	120	127	150
200	172	253	22	52	136	127	230

SELECTION SOFTWARE

KOANDA 3D is the new selection software which ensures the selection of the most suitable air diffusion products, ensuring a good compromise between thermal comfort, acoustics, aesthetics and less pressure drop. Selector Koanda 3D has a very intuitive and intuitive interface, which makes its use very pleasant and easy.

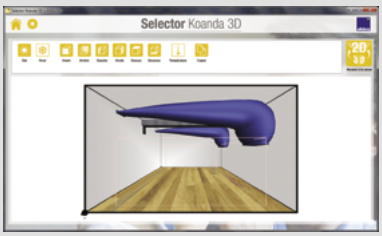

BEM 780 Series - Aluminium

BEM 780 white

ADVANTAGES

- *Aesthetic design.*
- *Available with RAL 9010 white or anodised aluminium finish.*
- *Simple to install.*
- *Low pressure drop.*

RANGE

Dimensions	References	Discount family
BEM 780 white		
Ø 100	11052245	***10***
Ø 125	11052246	***10***
Ø 160	11052247	***10***
Ø 200	11052248	***10***

DESCRIPTION

- Spin aluminium frame.
- Core made of aluminium mesh 12.5 x 12.5 mm.
- Aluminium finish, epoxy paint RAL 9010 30% matt white or anodised aluminium, natural satin tint.
- Mounting on wall by slotting into duct (screws used if necessary) and on ceiling through use of mounting brackets supplied as accessories.

FIELD OF APPLICATION

- Air return for all applications in small commercial or non-residential buildings.
- Wall or ceiling-mounted.

INSTALLATION DETAILS

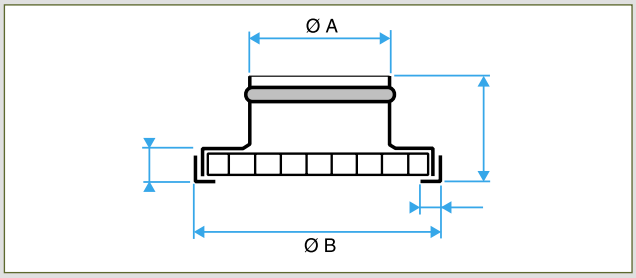

Dimensions					
Model	**Ø N (mm)**	**Ø A (mm)**	**Ø B (mm)**	**C (mm)**	**D (mm)**
BEM 780	125	123	160	14	55
BEM 780	160	158	200	14	55
BEM 780	200	198	248	14	55

SELECTION SOFTWARE

KOANDA 3D is the new selection software which ensures the selection of the most suitable air diffusion products, ensuring a good compromise between thermal comfort, acoustics, aesthetics and less pressure drop. Selector Koanda 3D has a very intuitive and intuitive interface, which makes its use very pleasant and easy.

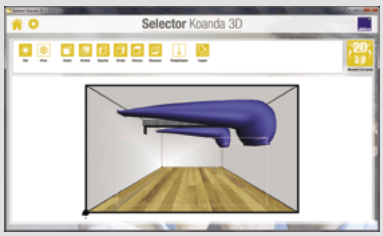

SCR 125 series - steel

SCR 125 grille

ADVANTAGES

- *Grille adapted to prison.*

DESCRIPTION

- Construction of galvanized steel.
- Front made of a perforated sheet 45% vested.
- Galvanized steel mounting bracket (F14 fixing).
- Powder coated white RAL 9010 30% matt shade.
- Attaching the mouth by back flange (F14 fixing).
- Standard diameters from 100 to 250 mm.

FIELD OF APPLICATION

- Supply and exhaust for all applications from ventilation in security premises.
- Because of its design the SCR 125 is especially suited to prison or psychiatric hospitals.
- Positioning wall or ceiling.

RANGE

Dimensions	References	Discount family
SCR 125		
Ø 100	11002991	***10***
Ø 125	11002992	***10***
Ø 160	11002993	***10***
Ø 200	11002994	***10***
Ø 250	11002995	***10***

Small adjustable terminals with core

SR 135 - SR 143 - SR 145 - SR 149 series - steel or plastic

SR 135 terminal with plasterboard sleeve

SR 143 terminal

SR 145 terminal

ADVANTAGES

- *Adjustable.*
- *Connection sleeve for wall or ceiling supplied.*

RANGE

Dimensions	References	Discount family
SR 135		
Ø 80	11052270	***10***
Ø 100	11052271	***10***
Ø 125	11052272	***10***
Ø 160	11052273	***10***
Ø 200	11052274	***10***
SR 143 standard assembly		
Ø 100	11052226	***10***
Ø 125	11052227	***10***
Ø 160	11052228	***10***
Ø 200	11052229	***10***
SR 145		
Ø 100	11052204	***10***
Ø 125	11052205	***10***
Ø 160	11052206	***10***
Ø 200	11052207	***10***
SR 149		
Ø 100	11001996	***10***
Ø 125	11001997	***10***
Ø 150	11001998	***10***
Ø 200	11001999	***10***

DESCRIPTION

- **SR 135, SR 143 and SR 145**: steel, epoxy paint RAL 9010 30% matt white.
- **SR 149**: white polypropylene.
- Fixed in place using standard connection sleeve or extended with claws (suited to mounting in plasterboard).
- Terminal with adjustable central core.
- Locked in position with counter-nut after positioning.
- Outer ring fitted with air tightness seal (SR 143, SR 145 and SR 149).
- SR 135: The central core is fitted with and acoustic absorbent material to ensure a low sound power level.

FIELD OF APPLICATION

- **SR 135**: air supply or exhaust.
- **SR 143**: air exhaust only.
- **SR 145**: air supply only.
- **SR 149**: air supply or exhaust.
- Wall or ceiling mounted.

ACCESSORIES

Dimensions	References	Discount family
Plasterboard penetration sleeve L 100 mm		
Ø 80	11053970	***10***
Ø 100	11053971	***10***
Ø 125	11053972	***10***
Ø 160	11053973	***10***
Ø 200	11053974	***10***

Dimensions	References	Discount family
Smooth plasterboard penetration sleeve L100		
Ø 100	11053356	***10***
Ø 125	11053357	***10***
Ø 160	11053358	***10***
Ø 200	11053359	***10***

- **SR 135**: Plasterboard penetration sleeve 100 mm (optional).
- **SR 143, SR 145**: Standard sleeve included, smooth plasterboard penetration sleeve 100 mm (optional).
- **SR 149**: standard sleeve included.

DIMENSIONS

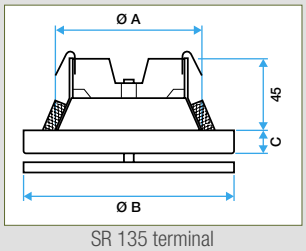

SR 135 terminal

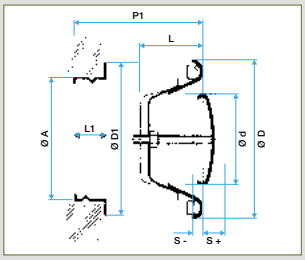

SR 143 terminal with standard mounting sleeve

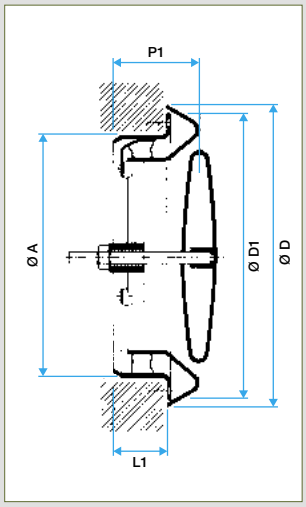

SR 149 terminal with standard mounting sleeve

Models SR 143 SR 145							
Comfort airflow levels for Lw < NR 30 and dimensions							
Ø A (mm)	Ø D1 (mm)	Ø d (mm)	Ø D (mm)	L (mm)	L1 (mm)	P1 (mm)	Airflow (m^3/h)
Ø 100	125	74	140	38	50	62	80
Ø 125	150	100	168	45	50	62	100
Ø 160	185	128	210	55	50	62	150
Ø 200	225	157	246	63	50	62	190

Model SR 149					
Comfort airflow levels for Lw < NR 30 and dimensions					
Ø A (mm)	**D (mm)**	**Ø D1 (mm)**	**L1 (mm)**	**P1 (mm)**	**Airflow (m^3/h)**
Ø 100	125	122	52	63	80
Ø 125	150	155	52	63	100
Ø 150	185	168	52	63	150
Ø 200	225	220	52	63	190

Model SR 135			
	Ø A (mm)	**Ø B (mm)**	**Ø C (mm)**
80	Ø 180	Ø 106	Ø 15
100	Ø 100	Ø 135	Ø 15
125	Ø 125	Ø 160	Ø 15
160	Ø 160	Ø 194	Ø 15
200	Ø 200	Ø 238	Ø 18

SELECTION SOFTWARE

KOANDA 3D is the new selection software which ensures the selection of the most suitable air diffusion products, ensuring a good compromise between thermal comfort, acoustics, aesthetics and less pressure drop. Selector Koanda 3D has a very intuitive and intuitive interface, which makes its use very pleasant and easy.

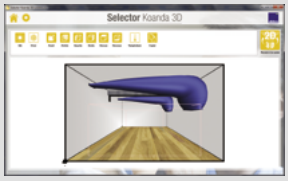

Selector Koanda 3D

Selector Koanda 3D

To choose well Aldes Air Diffusion products.

Designed for professionals, **Selector** Koanda **3D software** is a selection aid for Air Diffusion products. With its design and intuitive interface, which gives easier and faster use, **Selector** Koanda **3D** has a calculation engine which allows to select the air diffusion product which provides a good compromise between the thermic comfort, the acoustic, the aesthetic and the pressure loss. Ath the end of the project, **Selector** Koanda **3D** allows to print a complete file containing an exhaustive list of the equipment suitable for the project and technical details about the terminals, and also all components about the project (air throw, acoustic, etc.).

And the invisible becomes visible.

Crédit photos : Getty Images

#HealthyLiving

aldes

AC 101 - SC 101 - AC 102 D - SC 102 D series - aluminium or steel

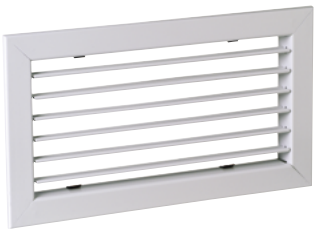

AC 101 - SC 101 terminal

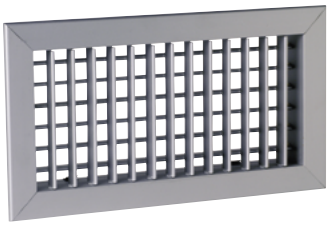

AC 102 D - SC 102 D

ADVANTAGES

- *Adjustable vanes.*
- *Easy to install.*

DESCRIPTION

- **AC 101 F3 and SC 101 F3:** single deflection terminal (air exhaust) with dirigible horizontal vanes, individually adjusted, 20 mm spacing.
- **AC 102 D F3 and SC 102 D F3:** double deflection terminal (air supply) with dirigible horizontal vanes at rear and vertical vanes at front, individually adjusted, 20 mm spacing.
- **AC models:** anodised aluminium finish, natural satin hue.
- **SC models:** steel finish, epoxy paint RAL 9010 30% matt white.
- Concealed attachment using friction clips.

FIELD OF APPLICATION

- Air supply and exhaust for all ventilation & air conditioning applications.
- Wall-mounted.

ACCESSORIES

- SGS damper with counter-rotary movement, made of galvanised steel sheet. Clip-mounted on terminal.
- F4 mounting frame made of galvanised steel sheet.
- MT and ME connection plenum made of galvanised steel sheet, with rear or side branch connection. See plenum dimensions on next page.

ADDITIONAL RANGE

- All dimensions up to 1500 x 1500 mm.
- Single deflection with vertical vanes or double deflection with horizontal vanes at front.
- Paint finish from RAL colour chart.
- Screw-fixed or using clasps (contact us for details).

RANGE

Dimensions	References
AC 101 F3 - SD terminal	
200 x 100	11050537
250 x 100	11050538
300 x 100	11050539
400 x 200	11050547
AC 102 D F3 - DD terminal	
200 x 100	11050577
300 x 100	11050579
500 x 100	11050581
250 x 150	11050582
300 x 150	11050583
400 x 150	11050584
600 x 150	11050586
400 x 200	11050587
600 x 200	11050589
800 x 200	11050590
1000 x 300	11050593

Dimensions	References
SC 101 F3 - SD terminal	
200 x 100	11050020
250 x 150	11050025
300 x 150	11050026
400 x 150	11050027
400 x 200	11050030
600 x 300	11050034
SC 102 D F3 - DD terminal	
200 x 100	11050060
250 x 100	11050061
300 x 100	11050062
400 x 100	11050063
300 x 150	11050066
400 x 150	11050067
600 x 150	11050069
400 x 200	11050070
600 x 200	11050072
800 x 200	11050073

DIMENSIONS

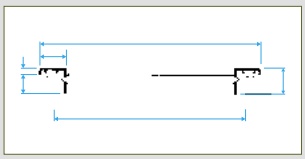

AC or SC 101grille

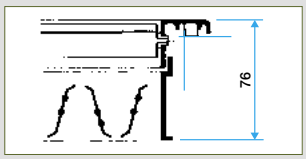

AC or SC 101 grille with damper

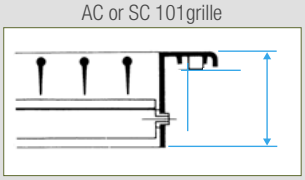

AC or SC 102 D grille

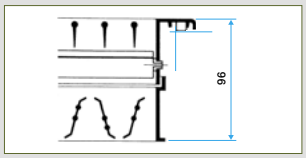

AC or SC 102 D grille with damper

Comfort airflow levels for Lw < NR 30 and dimensions				
L	**H (mm)**			
	100	150	200	300
200	200	-	-	-
250	250	370	-	-
300	300	450	-	-
400	400	700	800	-
500	500	800	1000	-
600	-	900	1200	1700
800	-	-	1500	2300
1000	-	-	-	2700

SELECTION SOFTWARE

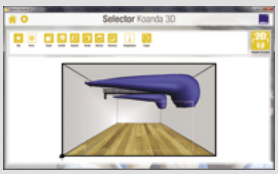

KOANDA 3D is the new selection software which ensures the selection of the most suitable air diffusion products, ensuring a good compromise between thermal comfort, acoustics, aesthetics and less pressure drop. Selector Koanda 3D has a very intuitive and intuitive interface, which makes its use very pleasant and easy.

SGS series - F4 - MT F3 - ME F3 - steel

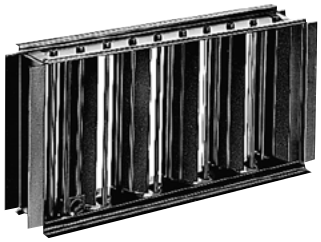

SGS damper

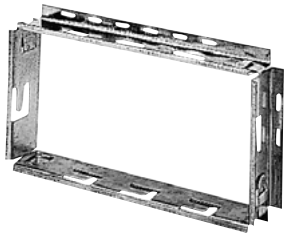

F4 mounting frame

ADVANTAGES

• Ease of installation on indoor terminals.

DESCRIPTION

• **SGS**: control damper with counter-rotary movement, made of galvanised steel sheet. Mounted on terminal using S-clips.
• **F4**: mounting frame for sealing, made of galvanised steel sheet. Suitable for F3 attachment (clips) of standard terminals. Supplied as 4 individual elements for assembly on site.
• **MT F3**: connection plenum with rear branch connection. Made of galvanised steel sheet. Two models are available according to the connection diameter.
- 90° model if connection diameter ≥ nominal height of terminal (indicated by *).
- 83° model if connection diameter ≤ nominal height of terminal.
• **ME F3**: connection plenum with side branch connection. Made of galvanised steel sheet.
• **MEI (5) F3**: connection plenum with side branch connection. Made of galvanised steel sheet. Polyurethane insulation on 5 sides.
• The MT F3 and ME F3 plenums are suitable for F3 (clip) attachment of standard terminals and do not require the use of an F4 mounting frame.

FIELD OF APPLICATION

• Range of accessories suited to indoor terminals.
• Caution: these accessories are not compatible with terminals for circular ducts.

ADDITIONAL RANGE

• All dimensions up to 1500 x 600 mm.
• Plenums available with insulation on 5 side or 2 sides (contact us for more details).

DIMENSIONS

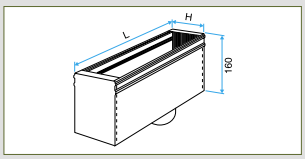

MT F3 plenum - rear connection 90°

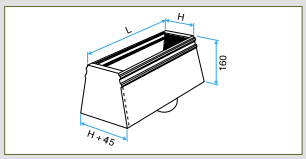

MT F3 plenum - rear connection 83°

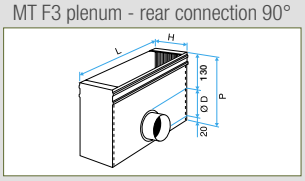

ME F3 plenum - side connection

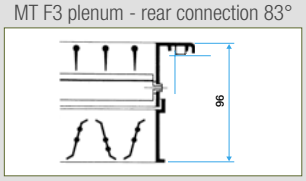

AC or SC 102 D grille with mounted damper

Dimensions							
L	H = 100		H = 150		H = 200		H = 300
	ME / MT F3	ME F3 Clim.	ME / MT F3	ME F3 Clim.	ME / MT F3	ME F3 Clim.	ME / MT F3
200	Ø 80*	Ø 125	-	-	-	-	-
250	Ø 100	-	Ø 125*	-	-	-	-
300	Ø 125	Ø 160	Ø 160	-	-	-	-
400	Ø 125	-	Ø 160	Ø 200	Ø 200	Ø 200	-
500	Ø 125	-	Ø 160	-	Ø 200	-	-
600	-	-	Ø 160	-	Ø 200	-	Ø 250*
800	-	-	-	-	2 x Ø 200	-	2 x Ø 250*
1000	-	-	-	-	-	-	2 x Ø 250*

All MT plenum are 83° versions, excepted models with (*).

RANGE

Dimensions	References
F4 mounting frame	
200 x 100	11053761
250 x 100	11053762
250 x 150	11053766
300 x 100	11053763
300 x 150	11053767
400 x 100	11053764
400 x 150	11053768
400 x 200	11053771
500 x 100	11053765
500 x 150	11053769
500 x 200	11053772
600 x 150	11053770
600 x 200	11053773
600 x 300	11053775
800 x 200	11053774
800 x 300	11053776
1000 x 300	11053777

Dimensions	References
MT F3 plenum - rear connection	
200 x 100	11053632
250 x 100	11053633
250 x 150	11053640
300 x 100	11053634
300 x 150	11053641
400 x 100	11053635
400 x 150	11053642
400 x 200	11053648
500 x 100	11053636
500 x 150	11053643
500 x 200	11053649
600 x 150	11053644
600 x 200	11053650
600 x 300	11053654
800 x 200	11053651
800 x 300	11053655
1000 x 300	11053656

Dimensions	References
MEIF (5) insulated 5-side air cond. plenum - side connection	
300 x 100	11053392
300 x 150	11053393
400 x 200	11053394
ME F3 air cond. plenum - side connection	
200 x 100	11053381
300 x 100	11053382
300 x 150	11053383
ME F3 plenum - side connection	
200 x 100	11053662
250 x 100	11053663
250 x 150	11053670
300 x 100	11053664
300 x 150	11053671
400 x 100	11053665
400 x 150	11053672
400 x 200	11053678
500 x 150	11053673
500 x 200	11053679
600 x 150	11053674
600 x 200	11053680

Dimensions	References
600 x 300	11053684
800 x 200	11053681
SGS damper	
200 x 100	11053241
250 x 100	11053242
250 x 150	11053246
300 x 100	11053243
300 x 150	11053247
400 x 100	11053244
400 x 150	11053248
400 x 200	11053251
500 x 100	11053245
500 x 150	11053249
500 x 200	11053252
600 x 150	11053250
600 x 200	11053253
600 x 300	11053255
800 x 200	11053254
800 x 300	11053256
1000 x 300	11053257

GD 102 - GD 102 D series - steel

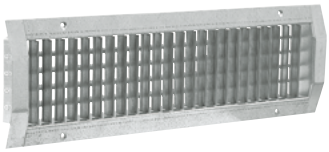

GD 102 - GD 102 D terminal

N damper

ADVANTAGES

• Suited to all standard diameters of circular and oblong ducts.

DESCRIPTION

• **GD 102 F1**: single deflection terminal (air exhaust) with dirigible vertical vanes, individually adjusted, 20 mm spacing.
• **GD 102 D F1**: double deflection terminal (air supply) with dirigible horizontal vanes at rear and vertical vanes at front, individually adjusted, 20 mm spacing.
• Galvanised steel finish, natural hue.
• Visible attachment with screws in frame.

FIELD OF APPLICATION

• Air supply and exhaust for all ventilation & air conditioning applications.
• Installed on cylindrical or oblong ducts.

ACCESSORIES

• N damper with inclined slide, steel sheet with locking screw.
• Clip-mounted on terminal. Used on air supply ducts.
• H damper with straight slide, steel sheet with locking screw.
• Clip-mounted on terminal. Used on air exhaust ducts.

ADDITIONAL RANGE

• All dimensions up to 1225 x 225 mm.
• Paint finish according to RAL chart (please contact us).

SELECTION SOFTWARE

KOANDA 3D is the new selection software which ensures the selection of the most suitable air diffusion products, ensuring a good compromise between thermal comfort, acoustics, aesthetics and less pressure drop. Selector Koanda 3D has a very intuitive and intuitive interface, which makes its use very pleasant and easy.

DIMENSIONS

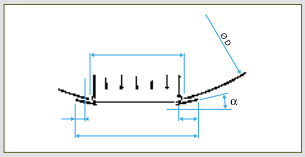

GD 102 D grille

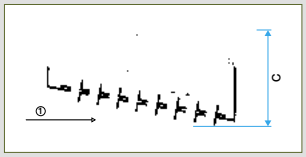

Grille GD 102 D with N damper

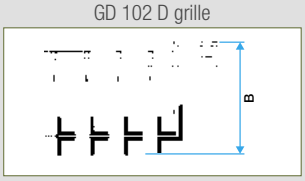

GD 102 grille with H damper

Comfort airflow levels for Lw < NR 30 (air supply with N damper 100 % opened) and dimensions							
L (mm)	**H (mm)**	**A(mm)**	**B (mm)**	**C (mm)**	**Ø D duct min (mm)**	**Ø D duct max (mm)**	**Airflow (m^3/h)**
325	75	42	86	124	160	400	190
425	75	42	86	137	160	400	230
525	75	42	86	150	160	400	300
625	75	42	86	163	160	400	360
425	125	46	90	141	315	900	460
525	125	46	90	154	315	900	560
625	125	46	90	167	315	900	680
525	225	56	100	164	630	1600	1000
625	225	56	100	177	630	1600	1300
825	225	56	100	204	630	1600	1500

RANGE

Dimensions	References	Discount family
GD 102 D F1 double-deflection terminal		
325 x 75	11050148	***10***
425 x 75	11050140	***10***
525 x 75	11050141	***10***
625 x 75	11050142	***10***
425 x 125	11050143	***10***
525 x 125	11050144	***10***
625 x 125	11050145	***10***
825 x 225	11050154	***10***
GD 102 F1 single-deflection terminal		
325 x 75	11050108	***10***
425 x 75	11050100	***10***
525 x 75	11050101	***10***
625 x 75	11050102	***10***
425 x 125	11050103	***10***
525 x 125	11050104	***10***
625 x 125	11050105	***10***

Dimensions	References	Discount family
H straight slide damper		
325 x 75	11053959	***10***
425 x 75	11053950	***10***
525 x 75	11053951	***10***
625 x 75	11053952	***10***
425 x 125	11053953	***10***
525 x 125	11053954	***10***
625 x 125	11053955	***10***
525 x 225	11053956	***10***
625 x 225	11053957	***10***
825 x 75	11053975	***10***
825 x 125	11053945	***10***
825 x 225	11053958	***10***
1025 x 75	11053946	***10***
1225 x 75	11053947	***10***

Dimensions	References	Discount family
N inclined slide damper		
325 x 75	11053969	***10***
425 x 75	11053960	***10***
525 x 75	11053961	***10***
625 x 75	11053962	***10***
425 x 125	11053963	***10***
525 x 125	11053964	***10***
625 x 125	11053965	***10***
525 x 225	11053966	***10***
625 x 225	11053967	***10***
825 x 75	11053758	***10***
825 x 125	11053759	***10***
825 x 225	11053968	***10***
1025 x 75	11053760	***10***
1225 x 75	11053756	***10***

AldesArchitect®

DIFFUSERS AND SMOKE EXHAUST GRILLES CAN BE ELEGANT AND HIGH-END TOO

The Élégant finish:

a wide choice of high-end finishings that bring the final touch to your projects.

AldesArchitect®, it is also...

The Essentielle finish & The Exclusive finish

Un large panel de couleurs RAL pour une intégration parfaitement cohérente à votre projet.

Possibility of colors or patterns specific to your project.

#HealthyLiving

aldes

Indoor grilles

Terminals with aluminium fixed front bars

Serie GRIDLINED wall - aluminium

The adapted grill to your projects

Gridlined wall

Gridlined Wall D

ADVANTAGES

- *Modern design,*
- *Easy installation,*
- *Finish on request,*
- *Custom Range.*

RANGE (WITH CHOICE OF OPTIONS)

Designation	References	Discount family
GRIDLINED WALL	11003411	***10***
GRIDLINED WALL D	11003412	***10***
GRIDLINED WALL CORE	11003413	***10***

DESCRIPTION

- Aluminum extrusion profile.
- Fixed horizontal front bars 15 ° deflection.
- Frame width 23 mm.
- Double deflexion (D type).
- Core type: single core, unframed.
- Fixing no apparent by clips or clasps.
- Finish anodized aluminum or epoxy paint RAL 9010 30% matt white.
- Special finish on request.

FIELD OF APPLICATION

- Supply and return for all ventilation and air conditioning.
- Grilles equipped with a rear deflection for blowing (type D) or single for the air exhaust.
- Wall positioning or lighter.

ADDITIONAL RANGE

- All dimensions up to 2000 x 800 mm in one piece.
- Linear versions (bands).
- Special range for floor positioning.

ACCESSORIES

- Damper AGB with vertical opposed blades, made of aluminium. Clip-mounted on terminal.
- F4 mounting frame made of galvanised steel sheet.
- MT and ME connection plenum made of galvanised steel sheet, with rear or side branch connection.

AVAILABLE CHOICE OF OPTIONS

- Access door for use in grille of fan coil for example,
- Execution «pool» (corrosion resistance)
- Integrated damper, with set screws,
- Seal on the frame.

Designation	Reference
Clips fixation	F3
Clasps fixation	F5
RAL 9010	9010
Other RAL groupe 1	RAL1
Other RAL groupe 2	RAL2
Other RAL groupe 3	RAL4
Special Option for Pool	PISC1
Seal	JOINT
Integrated damper	REGIS5
Access Door	ACCES2

DIMENSIONS

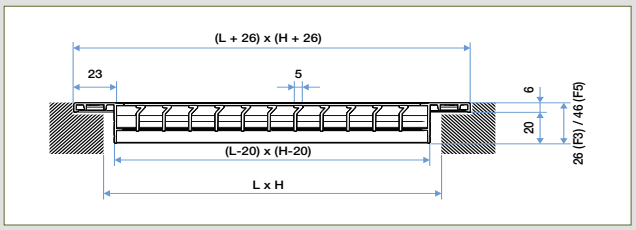

Gridlined Wall

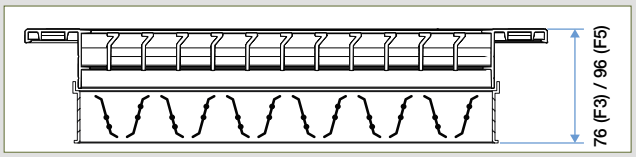

Gridlined Wall with damper

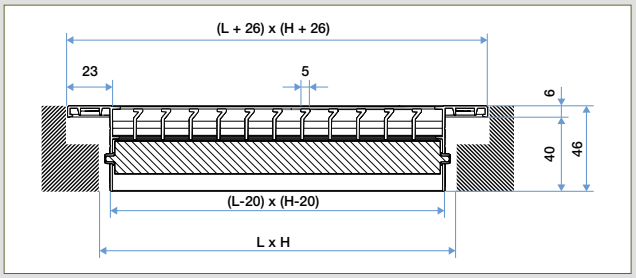

Gridlined wall D

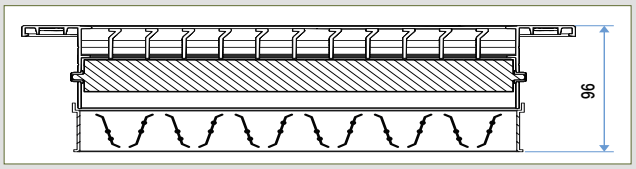

Gridlined wall D with damper

Comfort airflow levels for Lw < NR 30 and dimensions					
W x H (mm)	Ø branch connection (mm)	Airflow (m^3/h)	W x H (mm)	Ø branch connection (mm)	Airflow (m^3/h)
1000 x 75	2 x 100	550	300 x 150	160	350
200 x 100	80	160	400 x 150	160	450
300 x 100	125	250	600 x 150	160	650
400 x 100	125	330	800 x 150	2 x 160	800
600 x 100	2 x 100	500	1000 x 150	2 x 160	1000
800 x 100	2 x 125	550	1500 x 150	3 x 160	1350
1000 x 100	2 x 125	650	-	-	-

Selection tables at the end of chapter.

- All MT plenums are 83° models except for 250 x 150 and 200 x 100.

Indoor grilles

Terminals with aluminium fixed front bars

Serie GRIDLINED wall - aluminium

The adapted grill to your projects

Gridlined wall

Gridlined Wall D

RANGE (STOCK)

Dimensions	References
Gridlined Wall White	
200 x 100	11050562
300 x 100	11050563
400 x 100	11050564
500 x 100	11050565
600 x 100	11050566
1000 x 100	11050568
300 x 150	11050569
600 x 150	11050571
600 x 150	11050572
1000 x 150	11050573

Dimensions	References
Gridlined Wall Anodized	
500 x 100	11050245
600 x 100	11050246
1000 x 100	11050248
300 x 150	11050249
600 x 150	11050251

ACCESSORIES (STOCK)

Dimensions	References
F4 mounting frame	
1000 x 75	11053779
200 x 100	11053761
300 x 100	11053763
400 x 100	11053764
600 x 100	11053780
800 x 100	11053781
1000 x 100	11053782
300 x 150	11053767
400 x 150	11053768
600 x 150	11053770
800 x 150	11053783
1000 x 150	11053784
1500 x 150	11053785

Dimensions	References
ME F3 plenum - side connection	
1000 x 75	11053661
200 x 100	11053662
300 x 100	11053664
400 x 100	11053665
300 x 150	11053671
400 x 150	11053672
600 x 150	11053674
1000 x 150	11053676

Dimensions	References
MT F3 plenum - rear connection	
200 x 100	11053632
300 x 100	11053634
400 x 100	11053635
600 x 100	11053637
1000 x 100	11053639
300 x 150	11053641
400 x 150	11053642
600 x 150	11053644
800 x 150	11053645
1000 x 150	11053646

Dimensions	References
SGS damper	
1000 x 75	11053259
200 x 100	11053241
300 x 100	11053243
400 x 100	11053244
600 x 100	11053271
300 x 150	11053247
400 x 150	11053248
600 x 150	11053250
800 x 150	11053274
1000 x 150	11053275

SELECTION SOFTWARE

KOANDA 3D is the new selection software which ensures the selection of the most suitable air diffusion products, ensuring a good compromise between thermal comfort, acoustics, aesthetics and less pressure drop. Selector Koanda 3D has a very intuitive and intuitive interface, which makes its use very pleasant and easy.

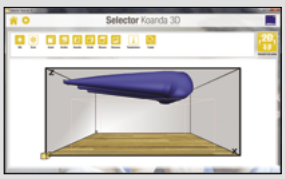

Indoor grilles

Terminals with aluminium fixed front bars

Serie Gridlined Floor - aluminium

The adapted grille to your projects

Gridlined Floor

ADVANTAGES

- *Custom range,*
- *Corrosion resistance (pools atmospheres),*
- *High load resistance,*
- *Corner pieces for continuity on the perimeter of the room.*

RANGE (WITH CHOICE OF OPTIONS)

Designation	References	Discount family
GRIDLINED FLOOR	11003402	***10***
GRIDLINED FLOOR ANGLE 90°	11003403	***10***
AGB DAMPER	11003201	***10***

DESCRIPTION

- Extruded aluminum profile.
- Fixed front bars 15 ° deflection.
- Sturdy frame and reinforced with U profiles, with visible frame of 5 mm.
- Removable core standard.
- Grille frame with anchoring (standard).
- Anodized aluminum finish or epoxy paint RAL 9010 30% matt white.
- Painting according to RAL choice of architect.
- Special finish on request.

FIELD OF APPLICATION

- Supply and return for all ventilation and air conditioning.
- Floor positioning.
- Suitable for environments type pools.

ADDITIONAL RANGE

- All sizes up to 2000 x 400 mm in one piece.
- Linear versions (bans).
- Corner pieces 90 °.

ACCESSORIES

- Damper AGB with vertical opposed blades, made of aluminium. Clip-mounted on terminal,
- Corner pieces 90 °.

AVAILABLE CHOICE OF OPTIONS

- Integrated damper, with set screws.
- Core attachment (removable screw).

Designation	Reference
RAL 9010	9010
Other RAL groupe 1	RAL1
Other RAL groupe 2	RAL2
Other RAL groupe 3	RAL4
Removable core	NOYFD
Integrated damper	REGIS5

DIMENSIONS

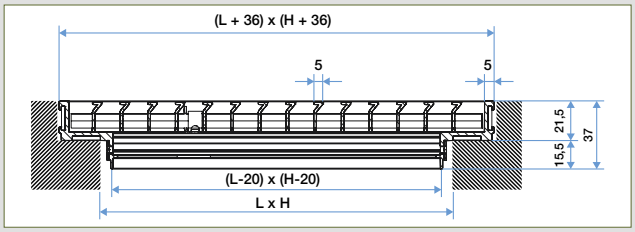

GRIDLINED floor

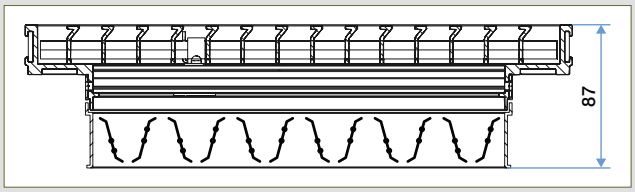

GRIDLINED floor with damper

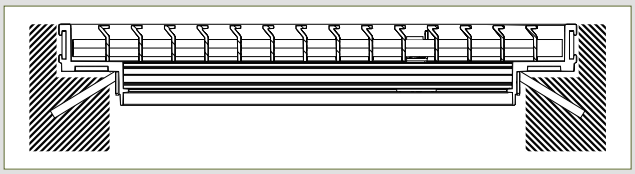

Anchoring

SELECTION SOFTWARE

KOANDA 3D is the new selection software which ensures the selection of the most suitable air diffusion products, ensuring a good compromise between thermal comfort, acoustics, aesthetics and less pressure drop. Selector Koanda 3D has a very intuitive and intuitive interface, which makes its use very pleasant and easy.

Indoor grilles

Terminals with aluminium fixed front bars

Serie Gridlined Exhaust - aluminium

GRIDLINED exhaust

AGB damper

ADVANTAGES

- *Anti-view function (ceiling mount),*
- *Easy Implementation,*
- *Finish on request,*
- *Custom Range.*

RANGE (WITH CHOICE OF OPTIONS)

Designation	References	Discount family
GRIDLINED EXHAUST	11003424	***10***
GRIDLINED EXHAUST CORE	11003422	***10***
AGB DAMPER	11003201	***10***

DESCRIPTION

- Aluminum extrusion profile.
- Fixed blades inclined at 45 °, covering for an anti view function.
- Frame width 23 mm.
- Core type: single core, unframed.
- Fixing no apparent by clips or clasps.
- Finish anodized aluminum or epoxy paint RAL 9010 30% matt white.
- Special finish on request.

FIELD OF APPLICATION

- Only return for all applications of ventilation and air conditioning.
- Wall or ceiling positioning.

ADDITIONAL RANGE

- All dimensions up to 2000 x 800 mm in one piece.

ACCESSORIES

- Damper with vertical opposed blades, made of galvanised steel or aluminium. Clip-mounted on terminal.
- F4 mounting frame made of galvanised steel sheet.
- MT and ME connection plenum made of galvanised steel sheet, with rear or side branch connection.

AVAILABLE CHOICE OF OPTIONS

- Execution «pool» (corrosion resistance).
- Integrated damper, with set screws.
- Seal on the frame.

Designation	Reference
Clasps fixation	F5
RAL 9010	9010
Other RAL groupe 1	RAL1
Other RAL groupe 2	RAL2
Other RAL groupe 3	RAL4
Special Option for Pool	PISC1
Seal	JOINT
Integrated damper	REGIS5

DIMENSIONS

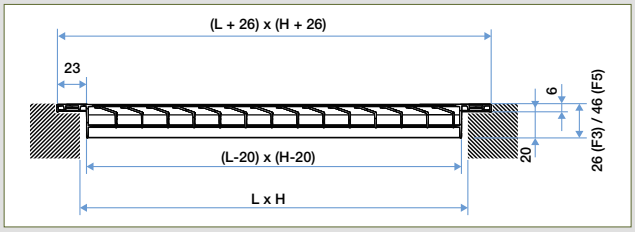

GRIDLINED exhaust

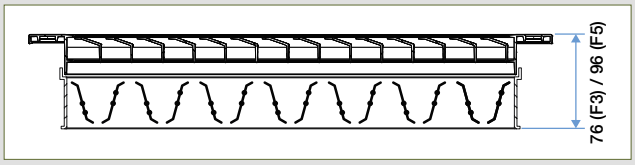

GRIDLINED exhaust with damper

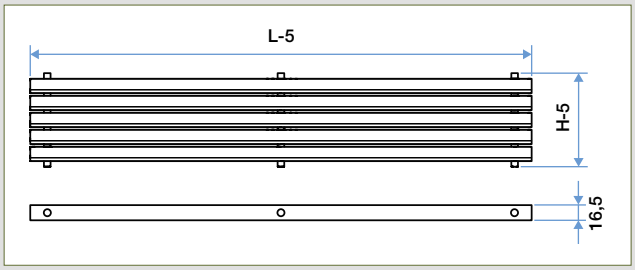

GRIDLINED exhaust core

Comfort airflow levels for Lw < NR 30 and dimensions					
W x H (mm)	Ø branch connection (mm)	Airflow (m^3/h)	W x H (mm)	Ø branch connection (mm)	Airflow (m^3/h)
1000 x 75	2 x 100	550	300 x 150	160	350
200 x 100	80	160	400 x 150	160	450
300 x 100	125	250	600 x 150	160	650
400 x 100	125	330	800 x 150	2 x 160	800
600 x 100	2 x 100	500	1000 x 150	2 x 160	1000
800 x 100	2 x 125	550	1500 x 150	3 x 160	1350
1000 x 100	2 x 125	650	-	-	-

SELECTION SOFTWARE

KOANDA 3D is the new selection software which ensures the selection of the most suitable air diffusion products, ensuring a good compromise between thermal comfort, acoustics, aesthetics and less pressure drop. Selector Koanda 3D has a very intuitive and intuitive interface, which makes its use very pleasant and easy.

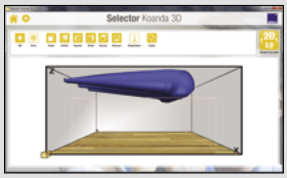

Indoor grilles

Fixed-vane terminals

AC 121 - SC 121 series - aluminium or steel

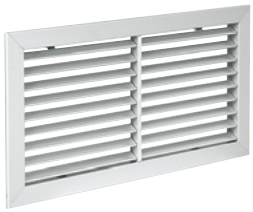

AC 121 or SC 121 terminal

SGS damper

ADVANTAGES

• Fixed vanes for exhaust.

DESCRIPTION

• Single-deflection terminal with horizontal fixed vanes with a 40° incline, 20 mm spacing.
• AC models: anodise aluminium finish, natural satin hue.
• SC models: steel finish, epoxy paint RAL 9010 30% matt white.
• Concealed attachment using friction clips.

FIELD OF APPLICATION

• Air exhaust for all ventilation & air conditioning applications.
• Wall-mounted.

ADDITIONAL RANGE

• All dimensions up to 1200 x 600 mm.
• Paint finish according to RAL chart.
• Screw-fixed or using clasps (contact us for details).

ACCESSORIES

• SGS damper with counter-rotary movement, made of galvanised steel sheet. Clip-mounted on terminal.
• F4 mounting frame made of galvanised steel sheet.
• MT and ME connection plenum made of galvanised steel sheet, with rear or side branch connection.

DIMENSIONS

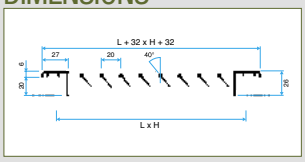

AC or SC 121 grille

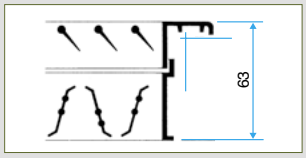

AC or SC 121 with damper

Comfort airflow levels for Lw < NR 25 and dimensions			
L (mm)	**H (mm)**	**Ø plenum (mm)**	**Airflow (m³/h)**
200	100	80*	180
300	150	160	350
400	200	200	600
600	200	200	1200
300	300	250	700
500	300	315	1200
600	300	250*	1400
800	300	2 x 250*	1800
600	600	355	2000
1000	600	2 x 315	3000

All MT plenum are 83° versions, excepted models with (*).

SELECTION SOFTWARE

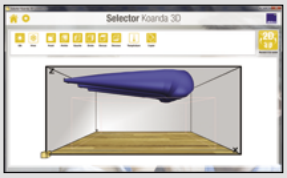

KOANDA 3D is the new selection software which ensures the selection of the most suitable air diffusion products, ensuring a good compromise between thermal comfort, acoustics, aesthetics and less pressure drop. Selector Koanda 3D has a very intuitive and intuitive interface, which makes its use very pleasant and easy.

RANGE WITH CHOICE OF OPTIONS

Designation	Reference	Discount family
Aluminium Grille AC 121	11002401	***10***
Steel grille SC121	11002024	***10***

ACCESSORIES

Dimensions	References
F4 mounting frame	
200 x 100	11053761
300 x 150	11053767
400 x 200	11053771
600 x 200	11053773
300 x 300	11053788
500 x 300	11053789
600 x 300	11053775
800 x 300	11053776
600 x 600	11053790
1000 x 600	11053791

Dimensions	References
ME F3 plenum - side connection	
200 x 100	11053662
300 x 150	11053671
400 x 200	11053678
600 x 200	11053680
300 x 300	11053687
600 x 300	11053684
800 x 300	11053685
600 x 600	11053689
MT F3 plenum - rear connection	
200 x 100	11053632

Dimensions	References
300 x 150	11053641
400 x 200	11053648
600 x 200	11053650
300 x 300	11053657
500 x 300	11053658
600 x 300	11053654
800 x 300	11053655
600 x 600	11053659
SGS damper	
200 x 100	11053241
300 x 150	11053247

Dimensions	References
400 x 200	11053251
600 x 200	11053253
300 x 300	11053268
500 x 300	11053269
600 x 300	11053255
800 x 300	11053256
600 x 600	11053270
1000 x 600	11053267

AC 123 - SC 125 series - aluminium or steel

AC 123 damper

SC 125 terminal

ADVANTAGES

• Screen finish for air exhaust.

DESCRIPTION

• Square screen terminal with 15 x 15 mm mesh (AC 123) or perforated plate with 45 % free passage (SC 125).
• AC models: anodised aluminium finish, natural satin hue.
• SC models: steel finish, epoxy paint RAL 9010 30% matt white.
• Concealed attachment using friction clips.

FIELD OF APPLICATION

• Air exhaust for all ventilation & air conditioning applications.
• Wall-mounted.

ADDITIONAL RANGE

• All dimensions up to 1200 x 600 mm.
• Paint finish according to RAL chart.
• Screw-fixed or using clasps (contact us for details).

ACCESSORIES

• SGS damper with counter-rotary movement, made of galvanised steel sheet. Clip-mounted on terminal.
• F4 mounting frame made of galvanised steel sheet.
• MT and ME connection plenums made of galvanised steel sheet, with rear or side branch connection.

SELECTION SOFTWARE

KOANDA 3D is the new selection software which ensures the selection of the most suitable air diffusion products, ensuring a good compromise between thermal comfort, acoustics, aesthetics and less pressure drop. Selector Koanda 3D has a very intuitive and intuitive interface, which makes its use very pleasant and easy.

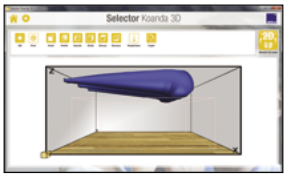

DIMENSIONS

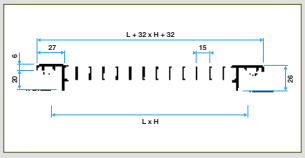

AC 123 grille

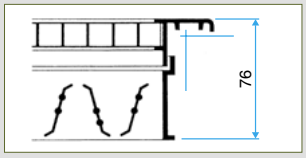

AC 123 grille with damper

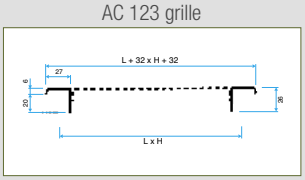

SC 125 grille

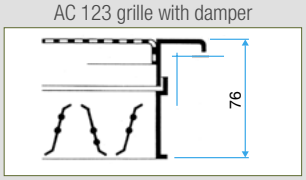

SC 125 grille with damper

Comfort airflow levels for Lw < NR 25 and dimensions				
L (mm)	H (mm)	Ø plenum (mm)	Airflow (m^3/h) for AC 123	Airflow (m^3/h) for SC 125
200	100	80*	160	140
300	150	160	400	350
400	200	200	700	600
600	200	200	1200	900
300	300	250	700	600
500	300	315	1300	1100
600	300	250*	1500	1200
800	300	2 x 250*	1900	1600
600	600	355	2200	1800
1000	600	2 x 315	4000	-

All MT plenum are 83° versions, excepted models with (*).

RANGE WITH CHOICE OF OPTIONS

Designation	Reference	Discount family
Aluminium Grille AC 123	11002601	***10***
Steel Grille SC125	11002025	***10***

ACCESSORIES

Dimensions	References
F4 mounting frame	
200 x 100	11053761
300 x 150	11053767
400 x 200	11053771
600 x 200	11053773
300 x 300	11053788
500 x 300	11053789
600 x 300	11053775
800 x 300	11053776
600 x 600	11053790
1000 x 600	11053791

Dimensions	References
ME F3 plenum - side connection	
200 x 100	11053662
300 x 150	11053671
400 x 200	11053678
600 x 200	11053680
300 x 300	11053687
600 x 300	11053684
800 x 300	11053685
600 x 600	11053689
MT F3 plenum - rear connection	
200 x 100	11053632

Dimensions	References
300 x 150	11053641
400 x 200	11053648
600 x 200	11053650
300 x 300	11053657
500 x 300	11053658
600 x 300	11053654
800 x 300	11053655
600 x 600	11053659
SGS damper	
200 x 100	11053241
300 x 150	11053247

Dimensions	References
400 x 200	11053251
600 x 200	11053253
300 x 300	11053268
500 x 300	11053269
600 x 300	11053255
800 x 300	11053256
600 x 600	11053270
1000 x 600	11053267

Indoor grilles

Pressed terminals

SR 377 - SR 378 series - steel

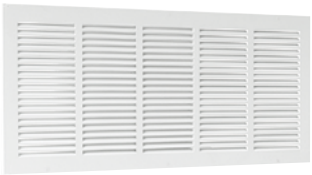

SR 377 terminal

GAT grille

ADVANTAGES

- *Surface-mounted.*

RANGE

Dimensions	References	Discount family
SR 377 terminal		
200 x 100	11050260	***10***
250 x 100	11050261	***10***
300 x 100	11050262	***10***
350 x 150	11050263	***10***
400 x 150	11050264	***10***
300 x 300	11050265	***10***
600 x 300	11050266	***10***
400 x 400	11050267	***10***
500 x 500	11050268	***10***
600 x 600	11050269	***10***
750 x 750	11050270	***10***

DESCRIPTION

- Single deflection grille with horizontal vanes, inclined by 20 °, spaced 8.5 mm apart (SR 377) and 12 mm (GAT).
- GAT exist with or without mosquito screens.
- Pressed steel.
- Steel finish, epoxy paint RAL 9010 30% matt white.
- Visible attachment with screws in frame.

FIELD OF APPLICATION

- Air exhaust for all basic heating or air conditioning systems.
- Wall-mounted.

SELECTION SOFTWARE

KOANDA 3D is the new selection software which ensures the selection of the most suitable air diffusion products, ensuring a good compromise between thermal comfort, acoustics, aesthetics and less pressure drop. Selector Koanda 3D has a very intuitive and intuitive interface, which makes its use very pleasant and easy.

DIMENSIONS

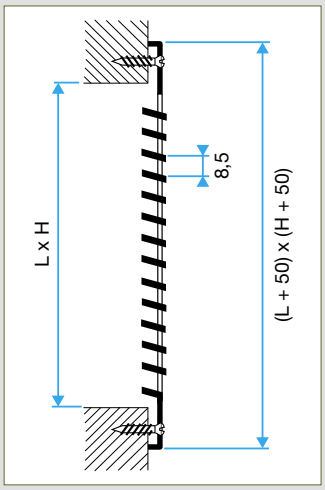

SR 377 terminal

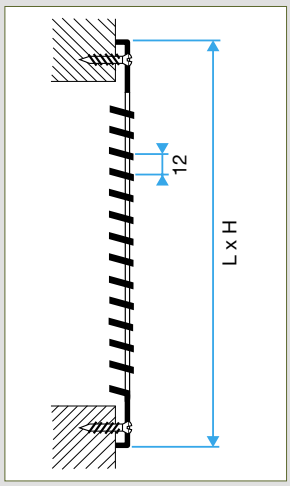

GAT grille

Comfort airflows for Lw < NR 30 and dimensions		
L (mm)	H (mm)	Airflow (m³/h)
100	100	60
200	100	120
250	100	150
300	100	180
100	150	90
150	150	100
250	150	150
350	150	300
400	150	350
100	200	120
200	200	240
300	300	600
600	300	1200
400	400	1000
500	500	1800
600	600	2500
750	750	3000
900	900	3500

Indoor grilles

Terminals with built-in damper

SR 356 series - steel

SR 356 terminal

ADVANTAGES

• Damper built into terminal.

RANGE

Dimensions	References	Discount family
SR 356 terminal		
213 x 102	11050180	***10***
315 x 102	11050181	***10***
264 x 152	11050182	***10***
315 x 152	11050183	***10***
406 x 203	11050184	***10***

DESCRIPTION

- Single deflection terminal with vertical vanes, 20° incline to left and right, 8.5 mm spacing.
- Pressed steel.
- Steel finish, epoxy paint RAL 9010 30% matt white.
- Visible attachment with screws in frame.

FIELD OF APPLICATION

- Air supply for all ventilation & air conditioning applications.
- Wall-mounted.

ACCESSORIES

- SR 356: multiple-vane damper with parallel movement. Built into terminal.

DIMENSIONS

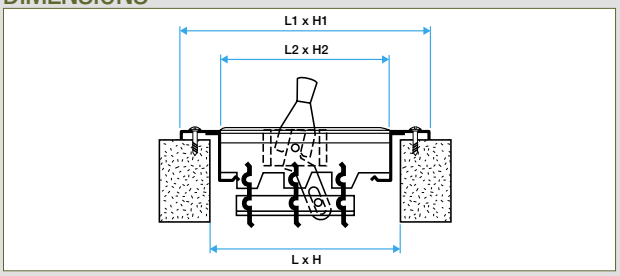

SR 356 grille

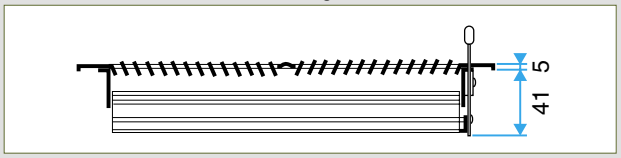

SR 356 grille

Comfort airflows for Lw < NR 30 and dimensions					
SR 356 grille	**L1 (mm)**	**H1 (mm)**	**L2 (mm)**	**H2 (mm)**	**Airflow (m^3/h)**
213 x 102	242	145	208	98	150
315 x 102	344	145	310	98	200
264 x152	291	194	258	147	300
315 x 152	344	194	310	147	400
416 x 203	445	245	411	198	750

SELECTION SOFTWARE

KOANDA 3D is the new selection software which ensures the selection of the most suitable air diffusion products, ensuring a good compromise between thermal comfort, acoustics, aesthetics and less pressure drop. Selector Koanda 3D has a very intuitive and intuitive interface, which makes its use very pleasant and easy.

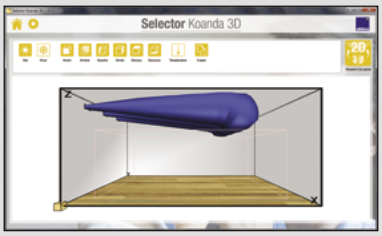

Indoor grilles

Fixed-vane terminals with filter

AC 161 - AC 163 series - aluminium

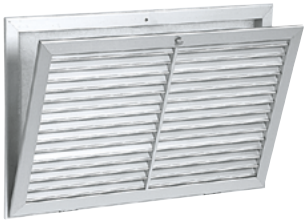

AC 161 W terminal

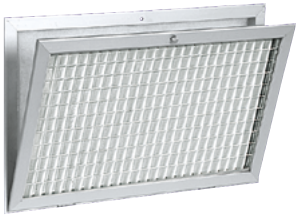

AC 163 W terminal

ADVANTAGES

- *Hinged side opening for easy access to filter.*
- *RAL9010 white finish.*

RANGE

Dimensions	References	Discount family
AC 161 WZ F1 screen terminal with filter - white (range with choice of options)		
622 x 322	11002011	***10***
522 x 422	11002011	***10***
622 x 422	11002011	***10***
522 x 522	11002011	***10***
622 x 522	11002011	***10***
AC 163 W F1 screen terminal with filter - white (range with choice of options)		
622 x 322	11002013	***10***
522 x 422	11002013	***10***
622 x 422	11002013	***10***
522 x 522	11002013	***10***
622 x 522	11002013	***10***

DESCRIPTION

- AC 161: single deflection terminal with horizontal fixed vanes, 40° incline, 20 mm spacing. Housing for 25 mm filter. Hinged front panel and closure with screw button.
- AC 163: Square 15 x 15 mm mesh screen terminal. Housing for 25 mm filter. Hinged front panel and closure with screw button.
- AC 161 Z and AC 163 Z models: aluminium finish, epoxy paint RAL 9010 30% matt white.
- Stainless steel hinges.
- Invisible screw attachments in filter housing used as mounting frame.

FIELD OF APPLICATION

- Air exhaust for all ventilation & air conditioning applications.
- Wall-mounted.

ACCESSORIES

- W filter G3 efficiency and M1 fire rating (supplied).

ADDITIONAL RANGE

- All dimensions up to 1200 x 600 mm. Paint finish according to RAL chart. (contact us for more details).

ACCESSORIES

Dimensions	References	Discount family
RT plenum - rear connection		
622 x 322	11053531	***10***
522 x 422	11053532	***10***
622 x 422	11053533	***10***
522 x 522	11053534	***10***
622 x 522	11053535	***10***
W filter		
622 x 322	11053501	***10***
522 x 422	11053502	***10***
622 x 422	11053503	***10***
522 x 522	11053504	***10***
622 x 522	11053505	***10***

DIMENSIONS

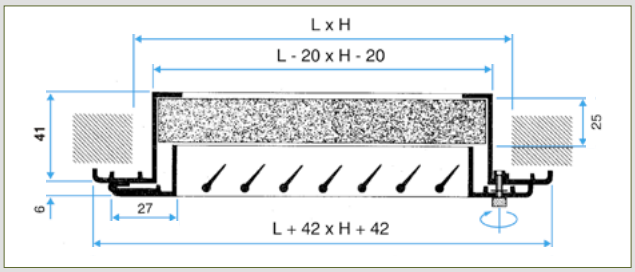

AC 161 W terminal

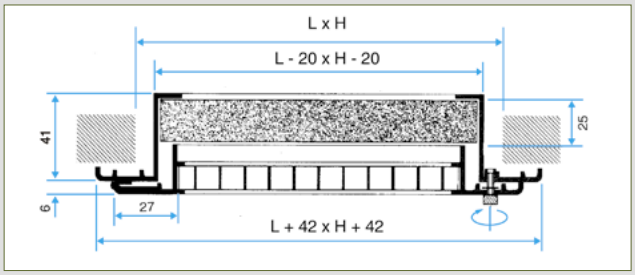

AC 163 W terminal

Comfort airflow levels for Lw < NR 25 and dimensions				
W x H (mm)	Standard filter (mm)	ØD Plenum (mm)	H Plenum (mm)	Airflow (m^3/h)
622 x 322	596 x 296	250	215	800
522 x 422	496 x 396	355	215	1600
622 x 422	596 x 396	355	215	1600
522 x 522	496 x 496	400	215	1800
622 x 522	596 x 496	450	215	2400

Selection table at end of chapter.

SELECTION SOFTWARE

KOANDA 3D is the new selection software which ensures the selection of the most suitable air diffusion products, ensuring a good compromise between thermal comfort, acoustics, aesthetics and less pressure drop. Selector Koanda 3D has a very intuitive and intuitive interface, which makes its use very pleasant and easy.

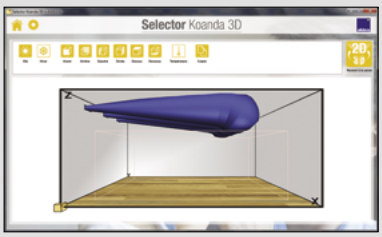

Indoor grilles

Fixed-vane terminals for 600 x 600 mm ceiling tiles

AO 123 - AU 123 - AU 124 - AO 251 - SC 370 series - aluminium or steel

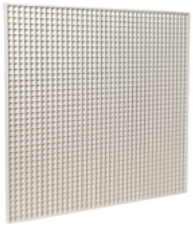

AO 123 Z terminal

AO 251 terminal

SC 370

ADVANTAGES

- *Suitable for standard 600 x 600 mm suspended ceiling tiles.*
- *AU 123 & AU 124 series, with slim frame for greater rigidity.*

RANGE

Dimensions	References	Discount family
White perforated plate + filter SC 370 W		
600 x 600	11050670	***10***
White perforated plate SC 370		
600 x 600	11050669	***10***
AO 251 terminal - anodised vanes		
600 x 600	11050667	***10***
AO 251 terminal - white vanes		
600 x 600	11050668	***10***
AU 123 Z screen terminal - white		
600 x 600	11050725	***10***
AU 124 Z screen terminal - white		
600 x 600	11050727	***10***
White mesh grille AO123-Z		
600 x 600	11050661	***10***
1200 x 600	11050662	***10***

DESCRIPTION

AO 123 Z
- Straight 15 x 15 mm square mesh screen terminal without frame.

AU 123 Z
- Straight 15 x 15 mm square mesh screen terminal with slim 5 mm frame.

AU 124 Z
- Inclined 15 x 15 mm square mesh screen (45°), slim 5 mm frame.
- Aluminium finish, epoxy paint RAL 9010 white.

AO 251
- Terminal with vanes inclined at 45°.
- Natural anodised aluminium finish or epoxy paint RAL 9010 30% matt white (AO 251 model).

SC 370
- Perforated plate - 45% free passage excluding frame.
- Steel finish, epoxy paint RAL 9010 white
- Gravity-mounted on T frame in suspended ceiling.

FIELD OF APPLICATION

- Air exhaust for all ventilation & air conditioning applications.
- Ceiling-mounted to replace 600 x 600 mm suspended ceiling tile.

ADDITIONAL RANGE

- Paint finish from RAL colour chart (contact us for more details).
- Other dimensions available on request.

ACCESSORIES

- Connection plenum made of galvanised steel (side branch connection).

Dimensions	References	Discount family
Plenum - side connector RE 123		
600 x 600	11053694	***10***
Spare W filter		
600 x 600	11053499	***10***

DIMENSIONS

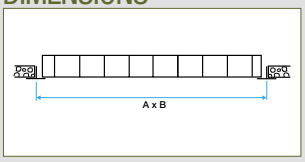

AO 123 grille

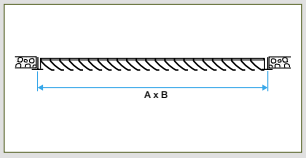

AO 251 grille

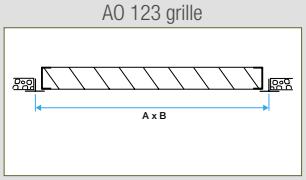

AU124 grille

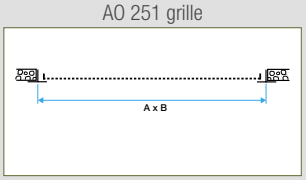

SC 370 grille

Comfort airflow levels for Lw < NR 25 and dimensions				
A (mm)	**B (mm)**	**Ø connection (mm)**	**Plenum height (mm)**	**Airflow (m^3/h)**
600	600	250	330	1000
1200	600	-	-	2000

SELECTION SOFTWARE

KOANDA 3D is the new selection software which ensures the selection of the most suitable air diffusion products, ensuring a good compromise between thermal comfort, acoustics, aesthetics and less pressure drop. Selector Koanda 3D has a very intuitive and intuitive interface, which makes its use very pleasant and easy.

Indoor grilles

Fixed-vane terminals with filter for tiles

AG 637 - AC 174 series - aluminium

AG 637 WZ terminal

AC 174 WZ terminal

ADVANTAGES

- *Hinged opening panel.*
- *Suitable for standard suspended-ceiling tiles.*
- *Efficient and robust closure system.*
- *Possible to install on non-removable ceiling.*

RANGE

Dimensions	References	Discount family
AC 174 WZ F0 45° screen terminal - removable suspended ceilings		
600 x 300	11050742	***10***
600 x 600	11050743	***10***
AC 174 WZ F1 45° screen terminal - rigid suspended ceilings or walls		
500 x 500	11050741	***10***
400 x 200	11050740	***10***
AG 637 WZ F0 terminal - white vanes - removable suspended ceilings		
600 x 300	11050682	***10***
600 x 600	11050681	***10***

DESCRIPTION

- Hinged door.
- Aluminium construction.
- Epoxy paint RAL 9010 30% matt white.
- Gravity-mounted on T frame supports in suspended ceiling (F0) or using visible screws (F1 - special for plaster ceilings).
- AG 637 WZ: Terminal with fixed front vanes at 45° incline and filter.
- AG 174 WZ: Terminal with square 15 x 15 mm mesh screen at 45° incline with filter.

FIELD OF APPLICATION

- Air exhaust for all ventilation & air conditioning applications.
- Installed in suspended ceiling tiles or wall-mounted.
- Special model for non-removable ceilings.

ADDITIONAL RANGE

- Other diameters: please contact us.
- Paint finish from RAL colour chart (contact us).
- Other attachment methods - contact us for details.

ACCESSORIES

- W filter 15 mm, M1 fire rating, G3 class (supplied).
- Connection plenum made of galvanised steel.

Dimensions	References	Discount family
Spare W filter		
600 x 300	11053515	***80***
600 x 600	11053514	***80***
500 x 500	11053518	***80***
400 x 200	11053517	***80***
ME F3 plenum - side connection		
400 x 200	11053678	***10***
RE 174 plenum - side connection		
600 x 300	11053572	***10***
600 x 600	11053570	***10***
500 x 500	11053578	***10***
RE 637 plenum - side connection		
600 x 300	11053575	***10***
600 x 600	11053577	***10***
MT F3 plenum - rear connection		
400 x 200	11053648	***10***

DIMENSIONS

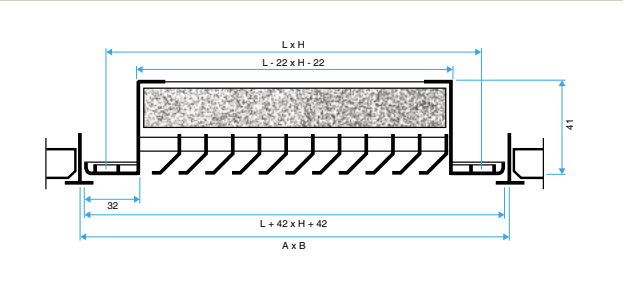

AG 637 W Z (for T frame suspended ceilings)

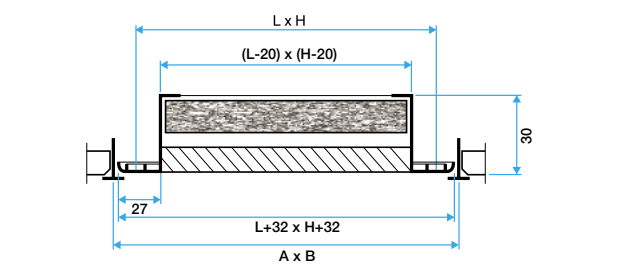

AC 174 W Z (for T frame suspended ceilings)

Comfort airflow levels for Lw < NR 30 and dimensions						
Model	A x B* (mm)	L (mm)	H (mm)	Height plenum (mm)	Ø branch connect. plenum (mm)	Airflow (m^3/h)
AG	600 x 300	554	254	360	250	800
	600 x 600	554	554	360	250	1000
	-	400	200	350	200	450
AC 174 WZ	-	500	500	360	250	1000
	600 x 300	563	263	360	250	1000
	600 x 600	563	563	360	250	1000

* Nominal ceiling tile dimensions.

SELECTION SOFTWARE

KOANDA 3D is the new selection software which ensures the selection of the most suitable air diffusion products, ensuring a good compromise between thermal comfort, acoustics, aesthetics and less pressure drop. Selector Koanda 3D has a very intuitive and intuitive interface, which makes its use very pleasant and easy.

AC 181 series - aluminium

AC 181 grille

ADVANTAGES

- *Aesthetic design.*
- *Mounting frame supplied.*
- *Vision blocked between rooms.*

RANGE

Dimensions	References	Discount family
AC 181 F1 transfer terminal		
200 x 100	11050687	***10***
300 x 150	11050688	***10***
400 x 200	11050689	***10***
500 x 300	11050691	***10***
600 x 300	11050692	***10***
600 x 400	11050693	***10***

DESCRIPTION.

- Single-deflection terminal with fixed horizontal vanes, 20 mm spacing. Vanes with chevron profiles.
- Anodised aluminium finish, natural satin hue.
- Visible attachment with screws in frame.

FIELD OF APPLICATION

- Air transfer from one room to another.
- Positioned mainly as door vent.

ADDITIONAL RANGE

- All dimensions up to 1200 x 600 mm.
- Paint finish according to RAL chart. (contact us for more details).

ACCESSORIES

- Mounting frame supplied.

DIMENSIONS

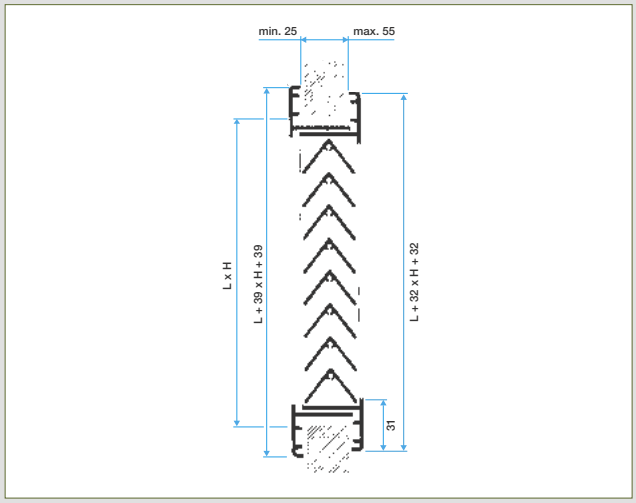

AC 181 grille

Comfort airflow level for Lw < NR 25 and dimensions		
L (mm)	H (mm)	Airflow (m^3/h)
200	100	60
300	150	150
400	200	250
600	200	350
500	300	410
600	300	600
600	400	650

Selection table at the end of chapter.

SELECTION SOFTWARE

KOANDA 3D is the new selection software which ensures the selection of the most suitable air diffusion products, ensuring a good compromise between thermal comfort, acoustics, aesthetics and less pressure drop. Selector Koanda 3D has a very intuitive and intuitive interface, which makes its use very pleasant and easy.

SC 831 series - steel

SC 831 diffuser

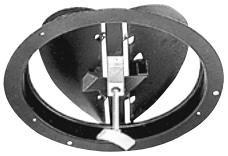

BY damper

ADVANTAGES

- *Simple to install.*
- *RAL 9010 white finish.*

RANGE

Dimensions	References	Discount family
SC 831 diffuser		
Ø 160	11051020	***10***
Ø 200	11051021	***10***
Ø 250	11051022	***10***
Ø 315	11051023	***10***
Ø 355	11051024	***10***

DESCRIPTION

- Surface-mounted circular cones made of pressed steel.
- Steel finish, epoxy paint RAL 9010 30% matt white.
- Visible screw attachment to ceiling in outer cone and FR mounting ring or BY damper.
- Connection to circular duct.

FIELD OF APPLICATION

- Horizontal air supply, fixed diffusion direction.
- Basic heating and air conditioning systems.
- Ceiling-mounted or on exposed duct.

ACCESSORIES

- Steel FR mounting ring.
- Steel BY damper also serving as mounting ring.
- Adjustment via centre of diffuser. Adjustment key supplied with damper.
- LRE connection plenum (side branch connection) made of galvanised steel (see next page).

Dimensions	References	Discount family
BY damper		
Ø 160	11053180	***10***
Ø 200	11053181	***10***
Ø 250	11053182	***10***
Ø 315	11053183	***10***
Ø 355	11053184	***10***
FR mounting ring		
Ø 160	11053440	***10***
Ø 200	11053441	***10***
Ø 250	11053442	***10***
Ø 315	11053443	***10***
Ø 355	11053444	***10***
LRE plenum - side connection		
Ø 160	11053311	***10***
Ø 200	11053312	***10***
Ø 250	11053313	***10***
Ø 315	11053314	***10***
Ø 355	11053315	***10***

DIMENSIONS

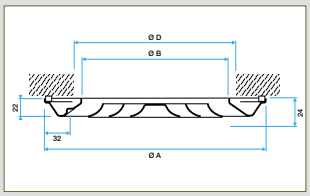

SC 831 diffuser

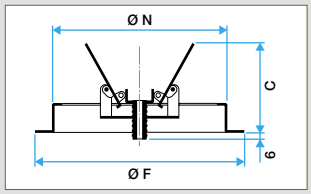

BY damper

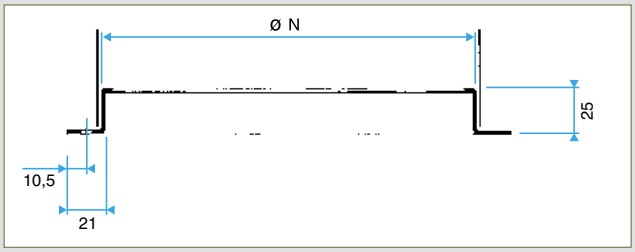

FR ring

Accessories: Dimensions		
Ø D (mm)	Ø A (mm)	C (mm)
160	190	110
200	240	110
250	290	140
315	340	165
355	390	180

Diffusers: Comfort airflow levels for Lw < NR 35 and dimensions				
Ø D (mm)	Ø A (mm)	Ø B (mm)	E (mm)	Airflow (m^3/h)
160	230	134	24	250
200	282	186	30	450
250	334	238	35	600
315	386	290	40	900
355	440	340	45	1200

See selection table at the end of chapter. For dimensions of plenums see page SC 832 TP series.

SELECTION SOFTWARE

KOANDA 3D is the new selection software which ensures the selection of the most suitable air diffusion products, ensuring a good compromise between thermal comfort, acoustics, aesthetics and less pressure drop. Selector Koanda 3D has a very intuitive and intuitive interface, which makes its use very pleasant and easy.

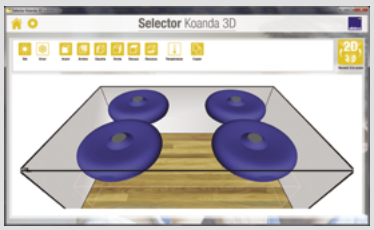

Fixed circular diffusers for 600 x 600 mm ceiling tiles

SC 832 TP series - steel

SC 832 TP diffuser

BR damper

ADVANTAGES

- *Designed for 600 x 600 mm suspended ceiling tiles.*
- *Simple to install.*

RANGE

Dimensions	References	Discount family
SC 832 TP diffuser		
Ø 160	11051015	***10***
Ø 200	11051016	***10***
Ø 250	11051017	***10***
Ø 315	11051018	***10***

DESCRIPTION

- Pressed steel fixed circular cones.
- Steel compensation plate replacing a ceiling tile.
- Invisible attachment to concrete slab using screws in diffuser collar.

Note: the weight of the diffuser must not be borne by the suspended ceiling framework. Use the suspension cables on page 176.

- Direct connection to circular duct or LRE plenum.
- Steel finish, epoxy paint RAL 9010 30% matt white.

FIELD OF APPLICATION

- Ceiling diffuser designed to replace 600 x 600 mm suspended ceiling tile (T frame).
- Horizontal air supply, fixed diffusion direction.
- Basic heating and air conditioning systems.

ACCESSORIES

- Butterfly type BR damper with 2 v-shaped vanes.
- LRE connection plenum (side branch connection) made of galvanised steel.

Dimensions	References	Discount family
LRE plenum - side connection		
Ø 160	11053311	***10***
Ø 200	11053312	***10***
Ø 250	11053313	***10***
Ø 315	11053314	***10***
BR damper		
Ø 160	11053220	***10***
Ø 200	11053221	***10***
Ø 250	11053222	***10***
Ø 315	11053223	***10***

DIMENSIONS

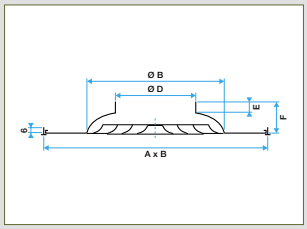

SC 832 TP diffuser

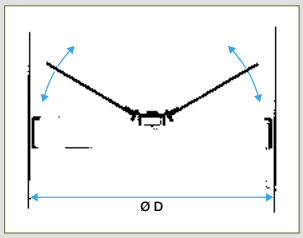

BR damper

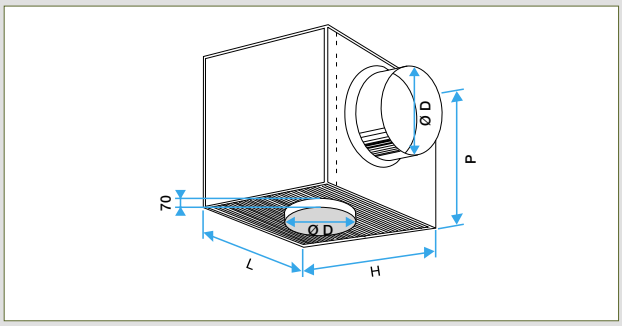

LRE plenum

Comfort airflow levels for Lw < NR 35 and dimensions						
Ø D (mm)	A x B* (mm)	Ø B (mm)	E (mm)	F (mm)	P (mm)	Airflow (m^3/h)
160	600 x 600	188	60	35	270	250
200	600 x 600	235	65	35	310	450
250	600 x 600	294	90	50	360	600
315	600 x 600	370	95	50	425	900

* Nominal ceiling tile dimensions.
See selection table at the end of chapter.

SELECTION SOFTWARE

KOANDA 3D is the new selection software which ensures the selection of the most suitable air diffusion products, ensuring a good compromise between thermal comfort, acoustics, aesthetics and less pressure drop. Selector Koanda 3D has a very intuitive and intuitive interface, which makes its use very pleasant and easy.

A 842 series - aluminium

A 842 diffusers

BR damper

ADVANTAGES

- *Available in two standard finishes.*
- *Large airflow range.*
- *Very simple to adjust (patented system)*
- *Available in thermostatic version.*
- *Easy to fix on ceiling using F16 brackets.*

RANGE

Dimensions	References	Discount family
A 842 diffuser RAL 9010		
Ø 160	11051360	***10***
Ø 200	11051361	***10***
Ø 250	11051362	***10***
Ø 315	11051363	***10***
Ø 355	11051364	***10***
Ø 400	11051365	***10***
Ø 500	11051367	***10***
Ø 630	11051368	***10***

DESCRIPTION

- Aluminium outer cone and pressed steel core.
- Adjustable diffusion using quick and easy worm screw system (patented).
- Epoxy paint RAL 9010 30% matt white.
- Invisible attachment to concrete slab using F16 brackets on diffuser.
- Direct connection to circular duct or using an LRE plenum.

FIELD OF APPLICATION

- Horizontal or vertical air supply. Diffusion can be adjusted manually or by thermostatic effect.
- Heating and air conditioning systems.
- Thermostatic version ideal for high temperature-difference air conditioning systems in high-ceiling rooms.
- Ceiling-mounted or on exposed duct.

ACCESSORIES

- BR damper: butterfly type with 2 or 4 V-shaped vanes (according to diameter). Steel construction. Precise adjustment of diffusion using worm screw.
- LRE connection plenum (side branch connection) made of galvanised steel.
- Attachment kit adapted for Plaster / BA13 plasterboard

Dimensions	References	Discount family
BR damper		
Ø 160	11053220	***10***
Ø 200	11053221	***10***
Ø 250	11053222	***10***
Ø 315	11053223	***10***
Ø 355	11053224	***10***
Ø 400	11053225	***10***
LRE plenum - side connection		
Ø 160	11053311	***10***
Ø 200	11053312	***10***
Ø 250	11053313	***10***
Ø 315	11053314	***10***
Ø 355	11053315	***10***
Ø 400	11053316	***10***
Ø 500	11053318	***10***
Set of 3 clips		
Ø 160	11053422	***10***
Ø 200	11053423	***10***
Ø 250	11053424	***10***
Ø 315	11053425	***10***
Ø 355	11053426	***10***

DIMENSIONS

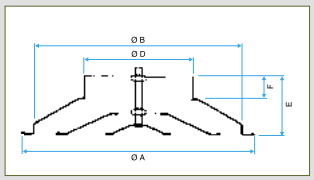

A 842 diffuser

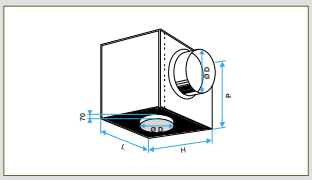

LRE plenum

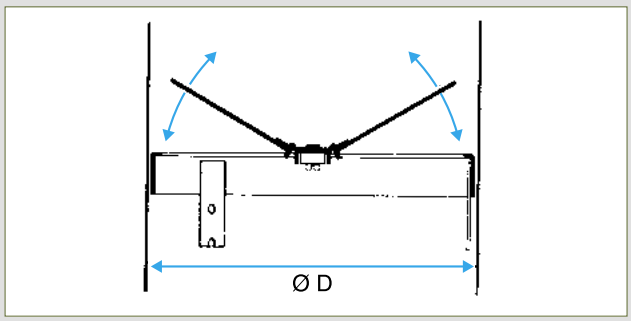

BR damper

Comfort airflow levels for Lw < NR 35 and dimensions							
Ø D (mm)	**Ø A (mm)**	**Ø B (mm)**	**E (mm)**	**F (mm)**	**P (mm)**	**L x H (mm)**	**Airflow (m^3/h)**
160	354	295	110	55	270	220 x 220	250
200	428	370	120	50	310	265 x 265	400
250	532	465	135	50	360	315 x 315	650
315	623	555	150	50	425	375 x 375	850
355	730	645	187	75	465	420 x 420	1100
400	776	690	185	78	510	460 x 460	1300
500	909	807	195	79	610	560 x 560	1800
630	1045	950	184	75	740	690 x 690	2500

SELECTION SOFTWARE

KOANDA 3D is the new selection software which ensures the selection of the most suitable air diffusion products, ensuring a good compromise between thermal comfort, acoustics, aesthetics and less pressure drop. Selector Koanda 3D has a very intuitive and intuitive interface, which makes its use very pleasant and easy.

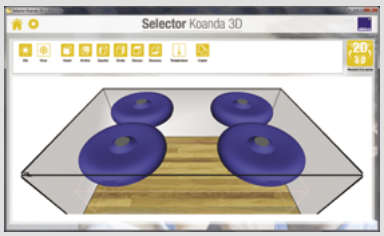

Adjustable circular diffusers for 600 x 600 mm ceiling tiles

A 842 TP series - aluminium

A 842 TP diffuser

BR damper

ADVANTAGES

- *Replaces 600 x 600 mm suspended ceiling tile.*
- *Aesthetic design.*
- *Large airflow range.*
- *Very simple to adjust (patented system)*
- *Easy to fix on ceiling using F16 brackets.*

RANGE

Dimensions	References	Discount family
A 842 TP diffuser RAL 9010		
Ø 160	11051371	***10***
Ø 200	11051372	***10***
Ø 250	11051373	***10***
Ø 315	11051374	***10***

DESCRIPTION

- Aluminium outer cone and pressed steel core.
- Adjustable diffusion using quick and easy worm screw system (patented).
- Design based on a standard A 842 diffuser where the outer cone is extended by a compensation plate for 600 x 600 mm ceiling tiles (pressed in a single piece).
- Concealed attachment to concrete slab using F16 brackets on diffuser.

Note: the weight of the diffuser must not be borne by the suspended ceiling framework. Use the suspension cables on page 176.

- Connection to circular duct or LRE plenum.
- Steel finish, epoxy paint RAL 9010 30% matt white.

FIELD OF APPLICATION

- Ceiling diffuser designed to replace 600 x 600 mm suspended ceiling tile (T frame).
- Horizontal or vertical air supply (adjustable diffusion).
- Heating and air conditioning systems.

ACCESSORIES

- BR damper: butterfly type with 2 or 4 V-shaped vanes (according to diameter). Steel construction. Precise adjustment of diffusion using worm screw.
- LRE connection plenum (side branch connection) made of galvanised steel.

Dimensions	References	Discount family
BR damper		
Ø 160	11053220	***10***
Ø 200	11053221	***10***
Ø 250	11053222	***10***
Ø 315	11053223	***10***
LRE plenum - side connection		
Ø 160	11053311	***10***
Ø 200	11053312	***10***
Ø 250	11053313	***10***
Ø 315	11053314	***10***

DIMENSIONS

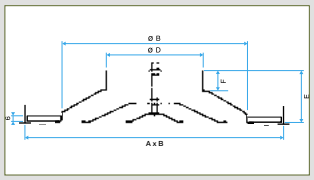

A 842 TP diffuser

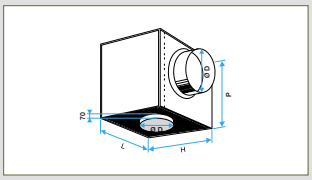

LRE plenum

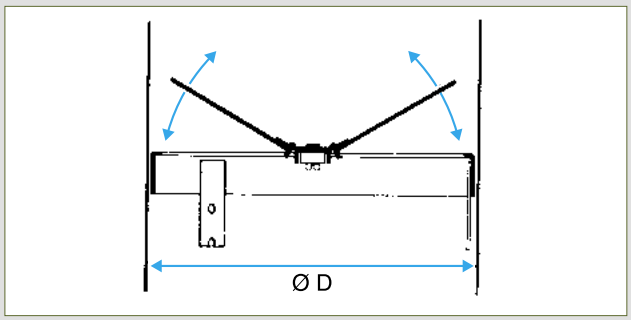

BR damper

Comfort airflow levels for Lw < NR 35 and dimensions						
Ø D (mm)	A x B* (mm)	Ø B (mm)	E (mm)	F (mm)	P (mm)	Airflow (m^3/h)
160	600 x 600	280	110	45	270	250
200	600 x 600	360	120	48	310	400
250	600 x 600	445	135	48	360	650
315	600 x 600	560	145	48	425	900

* Nominal ceiling tile dimensions.
See selection table at the end of chapter.

SELECTION SOFTWARE

KOANDA 3D is the new selection software which ensures the selection of the most suitable air diffusion products, ensuring a good compromise between thermal comfort, acoustics, aesthetics and less pressure drop. Selector Koanda 3D has a very intuitive and intuitive interface, which makes its use very pleasant and easy.

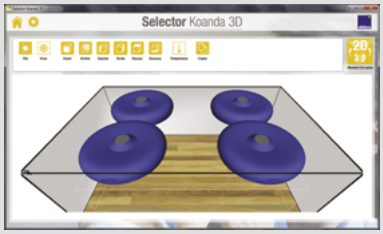

SC 310 R- SC 319 R series - steel

SC 310 R diffuser

SC 319 R diffuser

ADVANTAGES

- *Circular connection to save time on installation.*
- *Up to four channels adjustable on site.*
- *Exhaust filtration for SC 319 R.*

RANGE

Dimensions	References	Discount family
SC 310 R F16 air supply diffuser		
Ø 160	11051140	***10***
Ø 200	11051141	***10***
Ø 250	11051142	***10***
Ø 315	11051143	***10***
SC 310 RIF (5) F16 insulated air supply diffuser		
Ø 315	11051144	***10***
SC 319 R F16 air exhaust diffuser		
Ø 160	11051170	***10***
Ø 200	11051171	***10***
Ø 250	11051172	***10***
Ø 315	11051173	***10***

DESCRIPTION

- Removable perforated sheet.
- Steel finish, epoxy paint RAL 9010 30% matt white.
- Concealed attachment to concrete slab using F16 brackets on diffuser.
- Direct connection to circular duct.

FIELD OF APPLICATION

- Air supply (SC 310 R model) or exhaust (SC 319 R).
- Adjustable diffusion (up to 4 directions) using individually-adjusted deflectors.
- Heating and air conditioning systems.
- Ceiling-mounted.
- Filtration possible on exhaust.

ACCESSORIES

- Butterfly type BR damper with 2 V-shaped vanes. The damper is fitted in the air supply duct.
- Connection plenum built into diffuser. Circular connection on top.
- Type W flat filter, M1 fire rating G3 class for SC 319R exhaust diffusers.
- Paint finish from RAL colour chart (contact us).

Dimensions	References	Discount family
BR damper		
Ø 160	11053220	***10***
Ø 200	11053221	***10***
Ø 250	11053222	***10***
Ø 315	11053223	***10***
Spare W filter		
Ø 200	11053519	***10***
Ø 250	11053520	***10***
Ø 315	11053521	***10***

DIMENSIONS

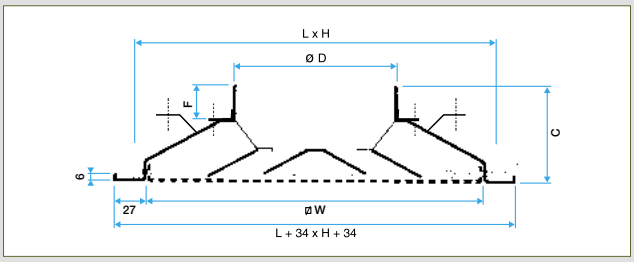

SC 310 R air supply diffuser

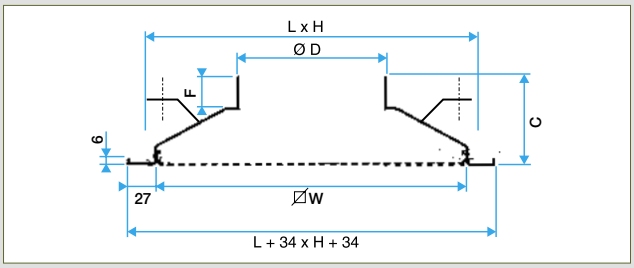

SC 319 R air exhaust diffuser

Comfort airflow levels for Lw < NR 30 and dimensions						
Ø D (mm)	W (mm)	W x H (mm)	C (mm)	F (mm)	Air supply airflow (m^3/h)	Exhaust airflow with filter (m^3/h)
160	280	300 x 300	98	55	250	250
200	380	400 x 400	108	60	400	450
250	480	500 x 500	122	60	600	650
315*	542	562 x 562	135	60	900	900

See selection table at the end of chapter.

* Specially designed for 600 x 600 mm ceiling tiles.

SELECTION SOFTWARE

KOANDA 3D is the new selection software which ensures the selection of the most suitable air diffusion products, ensuring a good compromise between thermal comfort, acoustics, aesthetics and less pressure drop. Selector Koanda 3D has a very intuitive and intuitive interface, which makes its use very pleasant and easy.

Square perforated sheet diffusers for 600 x 600 mm ceiling tiles

SC 360 R- SC 369 R series - steel

SC 360 R diffuser

Rear face of SC 360 R

ADVANTAGES

- *Designed for 600 x 600 mm suspended ceiling tiles.*
- *Circular connection to save time on installation.*
- *Up to 4 diffusion channels, adjustable on site.*
- *Filter on air exhaust.*

RANGE

Dimensions	References	Discount family
SC 360 R F16 air supply diffuser		
Ø 160	11051145	***10***
Ø 200	11051146	***10***
Ø 250	11051147	***10***
Ø 315	11051143	***10***
SC 369 R F16 air exhaust diffuser		
Ø 160	11051135	***10***
Ø 200	11051136	***10***
Ø 250	11051137	***10***
Ø 315	11051173	***10***
SC 360 RIF (5) F16 insulated air supply diffuser		
Ø 200	11051159	***10***
Ø 250	11051160	***10***
Ø 315	11051144	***10***

DESCRIPTION

- Removable perforated sheet.
- Designed based on a SC 310 R or SC 319 R standard diffuser built into a steel compensation plate.
- Steel finish, epoxy paint RAL 9010 30% matt white.
- Concealed attachment to concrete slab using F16 brackets on diffuser.

Note: the weight of the diffuser must not be borne by the suspended ceiling framework. Use the suspension cables on page 176.

- Direct connection to circular duct.
- Heat-insulated version to avoid any risk of condensation in air conditioning applications.

FIELD OF APPLICATION

- Ceiling diffuser designed to replace 600 x 600 mm suspended ceiling tile (T frame).
- Air supply (SC 360 R model) or exhaust (SC 369 R).
- Up to 4 diffusion directions using individually-adjusted deflectors.
- Heating and air conditioning systems.
- Filtration possible on exhaust.

ADDITIONAL RANGE

- Models adapted to Fine-Line frame suspended ceilings or with 675 x 675 mm tiles (contact us for details).
- Paint finish from RAL colour chart (contact us).

ACCESSORIES

- Dampers and plenums used for standard diffusers.
- Type W flat filter, M1 fire rating G3 class for SC 369 R exhaust diffusers.

Dimensions	References	Discount family
Spare W filter		
Ø 200	11053519	***80***
Ø 250	11053520	***80***
Ø 315	11053521	***80***
BR damper		
Ø 315	11053220	***10***
Ø 200	11053221	***10***
Ø 250	11053222	***10***
Ø 315	11053223	***10***

DIMENSIONS

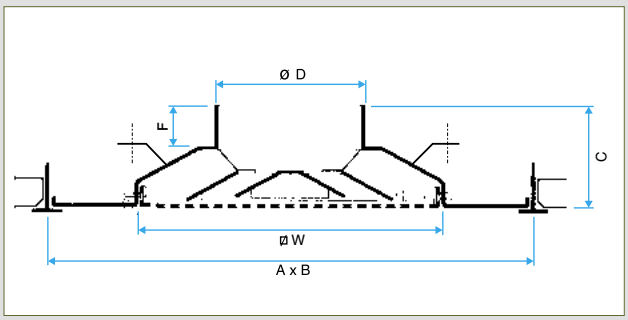

SC 360 R air supply diffuser

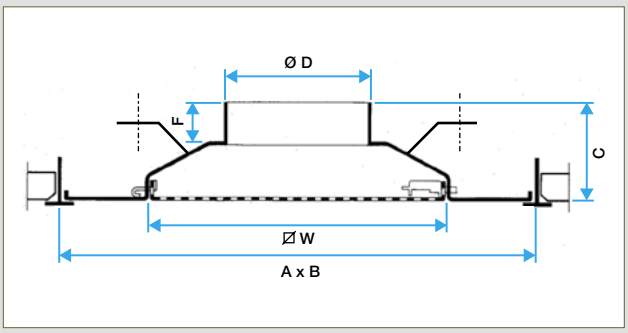

SC 369 R exhaust diffuser

Comfort airflow levels for Lw < NR 30 and dimensions						
Ø D (mm)	**A x B* (mm)**	**W (mm)**	**C (mm)**	**F (mm)**	**Air supply airflow (m^3/h)**	**Exhaust airflow with filter (m^3/h)**
160	600 x 600	280	98	55	250	250
200	600 x 600	380	108	60	400	450
250	600 x 600	480	122	60	600	650
315*	600 x 600	542	135	60	900	900

* Nominal ceiling tile dimensions.
See selection table at the end of chapter.

SELECTION SOFTWARE

KOANDA 3D is the new selection software which ensures the selection of the most suitable air diffusion products, ensuring a good compromise between thermal comfort, acoustics, aesthetics and less pressure drop. Selector Koanda 3D has a very intuitive and intuitive interface, which makes its use very pleasant and easy.

Square removable-core diffusers

SF 704 series - steel

SF 704 diffuser

B 700 damper

ADVANTAGES

- *Aesthetic design.*
- *Steel finish.*
- *Filter available on air exhaust.*
- *Access to filter by quick and easy removal of the central core.*

RANGE

Dimensions	References	Discount family
SF 704 4-channel diffuser white steel		
150 x 150	11051548	***10***
225 x 225	11051549	***10***
300 x 300	11051550	***10***
375 x 375	11051551	***10***
472 x 472*	11051555	***10***
600 x 600	11051554	***10***

DESCRIPTION

- Outer frame and core made of assembled shaped steel sheet.
- Removable core using spring system to access inner workings.
- Steel finish, epoxy paint RAL 9010 30% matt white.
- Concealed attachment to plenum using side screws on the neck of the diffuser.
- The plenum is fitted with brackets for attachment to a concrete slab.

FIELD OF APPLICATION

- Fixed horizontal air supply diffusion for heating and air conditioning installations.
- Possible to add a filter for use as air exhaust.
- Ceiling-mounted.
- 4-directional air diffusion.

ADDITIONAL RANGE

- Paint finish from RAL colour chart (contact us).
- Different branch connection diameters on RT and RE plenums.

ACCESSORIES

- Steel B 700 damper. Dampers with counter-rotary movement. Adjustment via front panel of diffuser. Clip-mounted on terminal.
- W4 pleated filter (50 mm) G3, M1 fire rating for use on exhaust.
- Access to filter by quick and easy removal of the central core.

Note: use of the W4 filter is incompatible with the B 700 damper.

- RT connection plenums (rear branch connection) and RE (side branch connection) made of galvanised steel.
- REIF connection plenum (side branch connection) made of galvanised steel, thermal insulation on 5 sides to avoid any risk of condensation in air conditioning applications.

DIMENSIONS

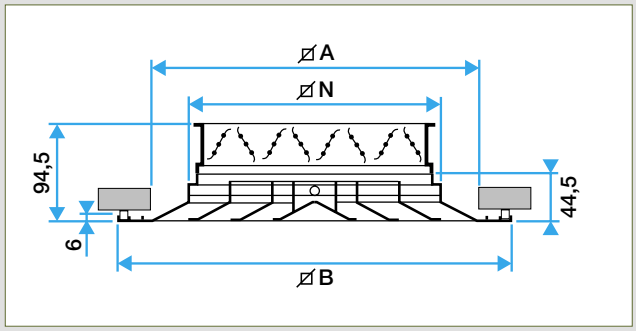

Diffuser + B 700 damper

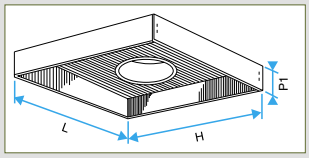

RT plenum

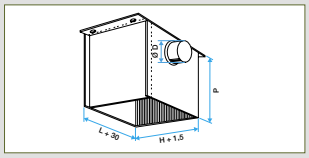

RE plenum

Comfort airflow levels for Lw < NR 30 and dimensions							
Dimensions L x H (mm)	**N (mm)**	**A (mm)**	**B (mm)**	**P1 (mm)**	**P (mm)**	**Ø D (mm)**	**Air supply airflow (m^3/h)**
150 x 150	148	214	274	115	235	125	180
225 x 225	223	289	349	115	270	160	320
300 x 300	298	364	424	165	360	250	500
375 x 375	373	439	499	165	425	315	630
450 x 450*	448	514	596	215	465	355	850
525 x 525	523	589	649	215	465	355	1100
600 x 600	598	664	724	215	510	400	1400

*For ceiling tiles 600 x 600 mm.

ACCESSORIES

Dimensions	References	Discount family
B 700 damper		
150 x 150	11051321	***10***
225 x 225	11051322	***10***
300 x 300	11051323	***10***
375 x 375	11051324	***10***
472 x 472*	11051328	***10***
600 x 600	11051327	***10***
Bare W4 G3 filter (replacement)		
225 x 225	11053372	***10***
375 x 375	11053374	***10***

Dimensions	References	Discount family
Filter cassette (G3 filter included) CW4		
150 x 150	11053431	***10***
225 x 225	11053432	***10***
300 x 300	11053433	***10***
375 x 375	11053434	***10***
472 x 472*	11053435	***10***
RE plenum - side connection		
150 x 150	11053610	***10***
225 x 225	11053613	***10***
300 x 300	11053615	***10***
375 x 375	11053618	***10***
472 x 4725	11053609	***10***
525 x 525	11053620	***10***
600 x 600	11053621	***10***

Dimensions	References	Discount family
REIF (5) insulated plenum - side connection		
225 x 225	11053594	***10***
300 x 300	11053595	***10***
375 x 375	11053596	***10***
472 x 472	11053597	***10***
RT plenum - rear connection		
150 x 150	11053580	***10***
225 x 225	11053583	***10***
300 x 300	11053585	***10***
375 x 375	11053588	***10***
472 x 472	11053592	***10***
600 x 600	11053591	***10***

*For ceiling tiles 600 x 600 mm.

Ceiling diffusers

Square removable-core diffusers for 600 x 600 mm ceiling tiles

SF 704 TP - steel

SF 704 TP diffuser

B 700 damper

ADVANTAGES

- *Designed for 600 x 600 mm suspended ceiling tiles.*
- *Aesthetic design.*
- *Filter available on air exhaust.*
- *Access to filter by quick and easy removal of the central core.*

RANGE

Dimensions	References	Discount family
SF 704 TP diffuser - white steel		
150 x 150	11051076	***10***
225 x 225	11051077	***10***
300 x 300	11051078	***10***
375 x 375	11051079	***10***

DESCRIPTION

- Outer frame and core made of assembled shaped steel sheet.
- Designed using a standard type 704 diffuser built into a steel or aluminium plate.
- Epoxy paint RAL 9010 30% matt white.
- Concealed attachment using a screw on the neck of the diffuser. The plenum is fitted with brackets for attachment to a concrete ceiling.

Note: the weight of the diffuser must not be borne by the suspended ceiling framework. Use the suspension cables on page 176.

FIELD OF APPLICATION

- Ceiling diffuser designed to replace 600 x 600 mm suspended ceiling tile (T frame).
- Air supply or exhaust, fixed diffusion direction.
- Heating and air conditioning systems.
- Possible to add a filter for use as air exhaust.

ADDITIONAL RANGE

- Models adapted to Fine-Line frame suspended ceilings or with 675 x 675 mm tiles (contact us for details).
- Paint finish from RAL colour chart (contact us).
- Different branch connection diameters on RT and RE plenums.

ACCESSORIES

- Steel B 700 damper. Dampers with counter-rotary movement. Adjustment via front panel of diffuser. Clip-mounted on terminal.
- W4 pleated filter (50 mm) G3, M1 fire rating for use on exhaust.
- Access to filter by quick and easy removal of the central core.

Note: use of the W4 filter is incompatible with the B 700 damper.

- RT connection plenums (rear branch connection) and RE (side branch connection) made of galvanised steel.
- REIF connection plenum (side branch connection) made of galvanised steel, thermal insulation on 5 sides to avoid any risk of condensation in air conditioning applications.

DIMENSIONS

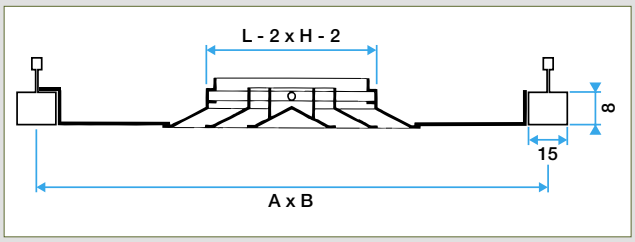

SF 704 TP diffuser

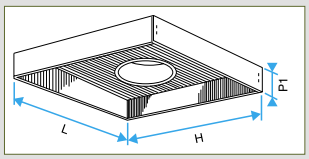

RT plenum

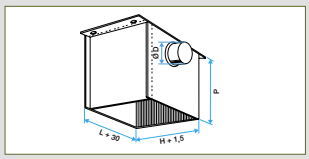

RE plenum

Comfort airflow levels for Lw < NR 30 and dimensions					
L x H (mm)	**A x B* (mm)**	**P1 (mm)**	**P (mm)**	**Ø D (mm)**	**Air supply airflow (m^3/h)**
150 x 150	600 x 600	115	235	125	180
225 x 225	600 x 600	115	270	160	320
300 x 300	600 x 600	115	360	250	500
375 x 375	600 x 600	115	425	315	650

* Nominal ceiling tile dimensions.

SELECTION SOFTWARE

KOANDA 3D is the new selection software which ensures the selection of the most suitable air diffusion products, ensuring a good compromise between thermal comfort, acoustics, aesthetics and less pressure drop. Selector Koanda 3D has a very intuitive and intuitive interface, which makes its use very pleasant and easy.

ACCESSORIES

Dimensions	References	Discount family
B 700 damper		
150 x 150	11051321	***10***
225 x 225	11051322	***10***
300 x 300	11051323	***10***
375 x 375	11051324	***10***
Bare W4 G3 filter (replacement)		
225 x 225	11053372	***10***
375 x 375	11053374	***10***
Filter cassette (G3 filter included) CW4		
150 x 150	11053431	***10***
225 x 225	11053432	***10***
300 x 300	11053433	***10***
375 x 375	11053434	***10***
RE plenum - side connection		
150 x 150	11053610	***10***
225 x 225	11053613	***10***
300 x 300	11053615	***10***
375 x 375	11053618	***10***
REIF (5) insulated plenum - side connection		
225 x 225	11053594	***10***
300 x 300	11053595	***10***
375 x 375	11053596	***10***
RT plenum - rear connection		
150 x 150	11053580	***10***
225 x 225	11053583	***10***
300 x 300	11053585	***10***
375 x 375	11053588	***10***

Square removable-core diffusers for 600 x 600 mm ceiling tiles

SC 704 R TP series - steel

SF 704 R TP diffuser

SF 704 RI insulated

ADVANTAGES

- *Designed for 600 x 600 mm suspended ceiling tiles.*
- *Circular connection.*
- *Aesthetic design.*

RANGE

Dimensions	References	Discount family
SF 704 R TP F16 steel diffuser		
Ø 160	11051086	***10***
Ø 200	11051087	***10***
Ø 250	11051088	***10***
Ø 315	11051089	***10***
SF 704 RI TP (5) F16 insulated diffuser - steel		
Ø 200	11051090	***10***
Ø 250	11051091	***10***
Ø 315	11051092	***10***

DESCRIPTION

- Outer frame and connection plenum made of pressed steel sheet (included).
- Core made of shaped steel sheet.
- Circular ring for direct connection to duct.
- Epoxy paint RAL 9010 30% matt white.
- Invisible attachment using F16 brackets on diffuser (F16).

Note: the weight of the diffuser must not be borne by the suspended ceiling framework. Use the suspension cables on page 176.

- Heat-insulated version to avoid any risk of condensation in air conditioning applications.

FIELD OF APPLICATION

- Ceiling diffuser designed to replace 600 x 600 mm suspended ceiling tile (T frame).
- Air supply or exhaust, fixed diffusion direction.
- Heating and air conditioning systems.

ADDITIONAL RANGE

- Paint finish from RAL colour chart (contact us).

ACCESSORIES

- BR damper.

Dimensions	References	Discount family
BR damper		
Ø 160	11053220	***10***
Ø 200	11053221	***10***
Ø 250	11053222	***10***
Ø 315	11053223	***10***

DIMENSIONS

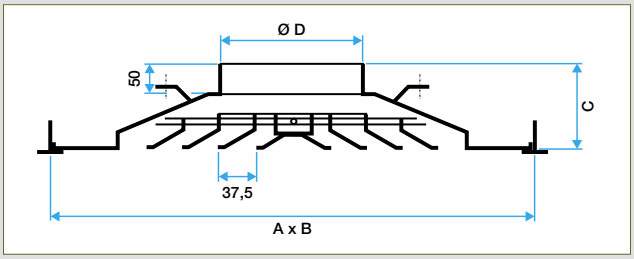

SF 704 R TP diffuser

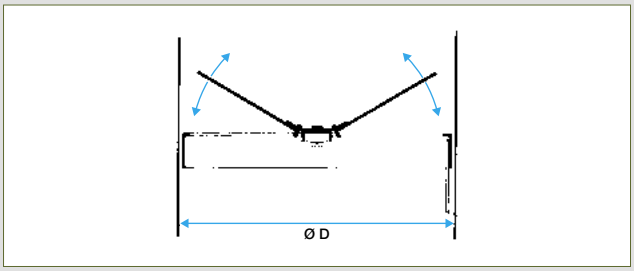

BR damper

Comfort airflow levels for Lw < NR 30 and dimensions				
Ø D (mm)	Dimensions A x B* (mm)	C (mm)	F (mm)	Airflow (m^3/h)
160	600 x 600	98	55	300
200	600 x 600	108	60	450
250	600 x 600	122	60	450
315	600 x 600	135	60	930

* Nominal ceiling tile dimensions.
See selection table at the end of chapter.

SELECTION SOFTWARE

KOANDA 3D is the new selection software which ensures the selection of the most suitable air diffusion products, ensuring a good compromise between thermal comfort, acoustics, aesthetics and less pressure drop. Selector Koanda 3D has a very intuitive and intuitive interface, which makes its use very pleasant and easy.

This is maybe a detail for you
and yet it changes everything...

Air diffusers which remove the blower noise,
eliminate the draughts and bring a design touch to all of your projects,
it is different from grilles, isn't it ?

Crédit photo : Sébastien Erome - 2017

#HealthyLiving

aldes

ALD 610 K series - aluminium

ALD 610 K with central plate

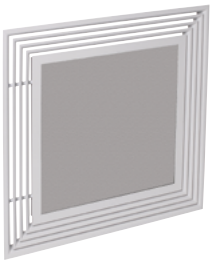

ALD 610 K with suspended ceiling tile

ADVANTAGES

- *Diffuser suited to standard 600 x 600 mm and 675 x 675 ceiling tiles on T frame or Fine-Line framework.*
- *Aesthetic design.*
- *Accessible filter on exhaust.*

RANGE

Dimensions	N°. slots	References	Discount family
Fixed diffuser without central plate ALD610K			
600 x 600	1	11002861	***10***
600 x 600	2	11002862	***10***
600 x 600	3	11002863	***10***
600 x 600	4	11002864	***10***
675 x 675	1	11002866	***10***
675 x 675	2	11002867	***10***
675 x 675	3	11002868	***10***
675 x 675	4	11002869	***10***

DESCRIPTION

- Body and deflectors made of aluminium profiles, epoxy paint finish RAL 9010 white.
- Central steel plate, epoxy paint RAL 9010 white.

Note: the central plate can be replaced by a suspended ceiling tile cut to the same dimensions for more harmonious integration.

- Exhaust model, filter holder and opening central core.
- Connection plenum made of galvanised steel with side branch connection (RE) or on top (RT), basic or insulated.
- Attachment of diffuser to plenum using non-removable clips. The diffuser and plenum are supplied unassembled (can be assembled on request).
- Attachment to concrete ceiling using brackets on the plenum.

Note: the weight of the diffuser must not be borne by the suspended ceiling framework. Use the suspension cables on page 176.

FIELD OF APPLICATION

- Air supply or exhaust. Fixed horizontal 4-direction diffusion with up to 4 slots.
- Exhaust filter holder version opening core for easy access to filter inside.
- Heating and air conditioning systems.
- Ceiling diffuser designed to replace 600 x 600 or 675 x 675 mm suspended ceiling tile (T frame or Fine-Line framework).

ADDITIONAL RANGE

- Paint finish from RAL colour chart (contact us).

ACCESSORIES

- G2 or G3 flat filter for exhaust (M1 rating).
- Control damper fitted on the plenum with access via the diffuser.
- Plenum insulated on 2 or 5 sides (M1 polyurethane foam).

Dimensions	N°. slots	References	Discount family
Plenum side connection RE610			
600 x 600	1	11003321	***10***
600 x 600	2 / 3 / 4	11003324	***10***
675 x 675	1	11003326	***10***
675 x 675	2 / 3 / 4	11003329	***10***
Plenum with top connection RT610			
600 x 600	1	11003331	***10***
600x 600	2 / 3 / 4	11003334	***10***
675 x 675	1	11003336	***10***
675 x 675	2 / 3 / 4	11003339	***10***

DIMENSIONS

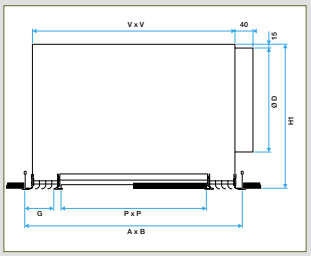

ALD 610 K diffuser with side connection plenum

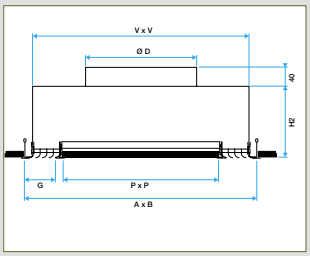

ALD 610 K diffuser with top connection plenum

Comfort airflow levels for Lw < NR 30 and dimensions										
A x B* (mm)	Nb slots	P x P (mm)	V x V (mm)	H1 (mm)	H2 (mm)	G (mm)	Ø D (mm)	H1** (mm)	Ø D** (mm)	Airflow (m^3/h)
600 x 600	1	508 x 508	560 x 560	265	125	25	200	325	250	300
600 x 600	2	474 x 474	560 x 560	325	125	42	250	325	250	500
600 x 600	3	440 x 440	560 x 560	325	125	59	250	325	250	750
600 x 600	4	406 x 406	560 x 560	325	125	76	250	325	250	900
675 x 675	1	583 x 583	635 x 635	265	125	25	250	325	250	350
675 x 675	2	549 x 549	635 x 635	325	125	42	250	325	250	550
675 x 675	3	515 x 515	635 x 635	325	125	59	250	325	250	850
675 x 675	4	481 x 481	635 x 635	325	125	76	250	325	250	1000

* Nominal ceiling tile dimensions.

**Opening version with filter only.

NB : the diffuser and the plenum could not be sale separately.

SELECTION SOFTWARE

KOANDA 3D is the new selection software which ensures the selection of the most suitable air diffusion products, ensuring a good compromise between thermal comfort, acoustics, aesthetics and less pressure drop. Selector Koanda 3D has a very intuitive and intuitive interface, which makes its use very pleasant and easy.

ALD 610 K Combined series - air supply + exhaust - aluminium

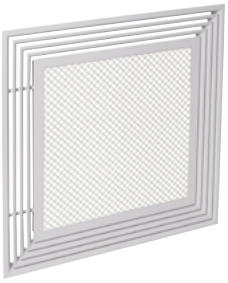

ALD 610 K Combined diffuser

ADVANTAGES

- *Air supply diffuser with built-in exhaust.*
- *Time savings on installation.*
- *Suitable for central air management and ducted convention fans.*
- *Suited to standard 600 x 600 mm and 675 x 675 mm ceiling tiles with T frame or Fine-Line frameworks.*
- *Accessible filter on exhaust (optional).*

RANGE

Dimensions	N°. slots	References	Discount family
Fixed diffuser with perforated sheet metal Combined ALD610K			
600 x 600	1	11002881	***10***
600 x 600	2	11002882	***10***
600 x 600	3	11002883	***10***
600 x 600	4	11002884	***10***
675 x 675	1	11002886	***10***
675 x 675	2	11002887	***10***
675 x 675	3	11002888	***10***
675 x 675	4	11002889	***10***

DESCRIPTION

- Diffuser equipped with double plenum to offer simultaneous air supply and exhaust functions.
- Aluminium body and air supply deflectors.
- Central plate (for exhaust) made of perforated steel. This plate may be equipped with a filter in which case the central core can be opened for easy access to the filter.
- Double plenum with two opposed branch connections, galvanised steel.
- Epoxy paint finish, RAL 9010 white.
- Concealed attachment of diffuser to plenum using non-removable clips. The diffuser and plenum are supplied pre-assembled (to order at the same time).
- Attachment to concrete ceiling using brackets on the plenum.

Note: the weight of the diffuser must not be borne by the suspended ceiling framework. Use the suspension cables on page 176.

FIELD OF APPLICATION

- Air supply (around edge) and exhaust (in centre) for all ventilation & air conditioning applications.
- Fixed horizontal 4-direction diffusion with up to 4 slots.
- Heating and air conditioning systems.
- Ceiling diffuser designed to replace 600 x 600 or 675 x 675 mm suspended ceiling tile (T frame or Fine-Line framework).

ADDITIONAL RANGE

- Paint finish from RAL colour chart (contact us).

ACCESSORIES

- G2 or G3 flat filter supplied fitted in plenum for exhaust (M1).
- Double plenum insulated on 5 sides (M1 polyurethane foam).

Dimensions	N°. slots	References	Discount family
Double plenum R-RE			
600 x 600	1	11003341	***10***
600 x 600	2	11003342	***10***
600 x 600	3	11003343	***10***
600 x 600	4	11003344	***10***
675 x 675	1	11003346	***10***
675 x 675	2	11003347	***10***
675 x 675	3	11003348	***10***
675 x 675	4	11003349	***10***

ENCOMBREMENT

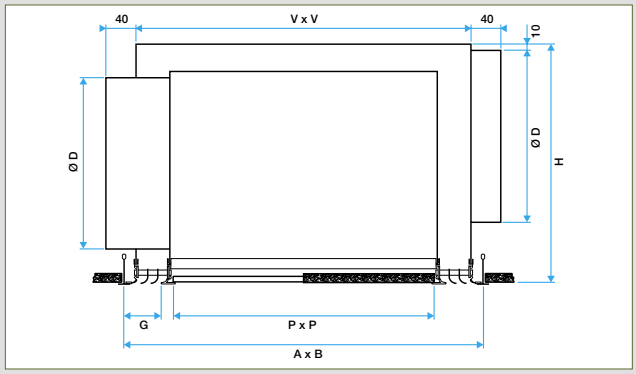

Diffuseur Combined ALD 610 K

Comfort airflow levels for Lw < NR 30 (air supply + exhaust) and dimensions							
A x B* (mm)	**Number of slots**	**P x P (mm)**	**V x V (mm)**	**H (mm)**	**G (mm)**	**Ø D (mm)**	**Airflow (m^3/h)**
600 x 600	1	508 x 508	560 x 560	365	25	250	300
	2	474 x 474			42	250	500
	3	440 x 440			59	250	750
	4	406 x 406			76	250	900
675 x 675	1	583 x 583	635 x 635		25	200	350
	2	549 x 549			42	250	550
	3	515 x 515			59	250	850
	4	481 x 481			76	250	1000

* Nominal ceiling tile dimensions.

SELECTION SOFTWARE

KOANDA 3D is the new selection software which ensures the selection of the most suitable air diffusion products, ensuring a good compromise between thermal comfort, acoustics, aesthetics and less pressure drop. Selector Koanda 3D has a very intuitive and intuitive interface, which makes its use very pleasant and easy.

Slot diffusers

Diffusers with adjustable aluminium slots

LINED series - aluminium

LINED air supply - 2 slots

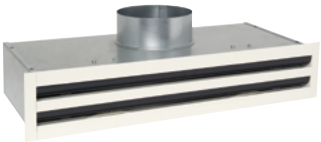

LINED with plenum

ADVANTAGES

- *Adjustable air diffusion.*
- *Identical aesthetics for air supply and exhaust.*
- *Filtration possible on exhaust.*
- *Possibility of linear strips.*
- *Available in anodised aluminium or epoxy paint finish.*
- *Compatible with AldesArchitect ™ offer.*

RANGE (WITH CHOICE OF OPTIONS)

Designation	References
LINED S AIR SUPPLY	11002297
LINED E EXHAUST	11002298
LINED EO FILTER HOLDER	11002299
Plenum for LINED	11002135
FILTER FOR LINED EO	11003256

- Air supply or exhaust diffusers. S2 or S3 attachment.
- Maximum length in one room 2000 mm. Beyond this distance, the diffuser requires 2000 mm sections and two end pieces of equal length (always between 1000 and 2000 mm).
- All intermediate lengths available in increments of 1 mm.
- Width up to 8 slots.
- Paint finish from RAL colour chart (contact us).

DESCRIPTION

- Aluminium body, natural anodised or epoxy paint finish, RAL 9010 30% matt.
- Aluminium deflectors, RAL 7024 anthracite grey or RAL 9010 white.
- Hollow-joint frame, 25 mm wide.
- Slot width 25 mm.
- LINED S: air supply model with dirigible deflectors.
- LINED E: exhaust model with fixed deflectors.
- LINED EO: exhaust model with fixed deflectors and openable central core for access to filter located in connection plenum.

Hinged core, push-push closure mechanism.
Only available with 3 slots or more.

- Concealed attachment to plenum, either adjustable and accessible below the diffuser (type S3), or directly using self-tapping screws on the sides of the plenum (type S2)

Note: the S2 attachment method is recommended for suspended ceilings and incompatible with non-removable ceilings (plaster or BA13 plasterboard).

FIELD OF APPLICATION

- Air supply or exhaust depending on model.
- Adjustable diffusion using dirigible deflector in the centre of each slot. Vertical airflow possible.
- Openable exhaust models with filter to replace that of ducted convector fan.
- Ceiling-mounted.
- Possibility of linear strips (except openable versions).

ACCESSORIES

- Corner pieces available in 90° or 135° versions (contact us for details).
- Connection plenum made of galvanised steel with side branch connection.

Acoustic or thermo-acoustic insulation on request (M1 fir rating on foam).
Equipped with brackets for attachment to concrete slab.
Use suspension cables on page 176.
Note: the weight of the diffuser must not be borne by the ceiling.

- G3 M1 filter included in plenum for openable exhaust diffusers.
- Spade damper fitted in plenum branch connection. Adjustable from front of diffuser.

DIMENSIONS

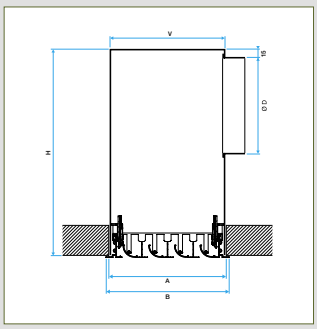

Air supply diffuser with plenum, S3 attachment

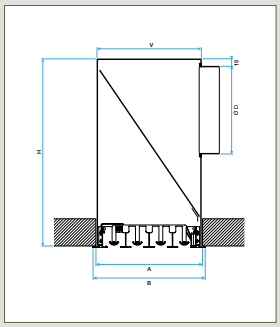

Exhaust diffuser with plenum, S2 attachment and filter.

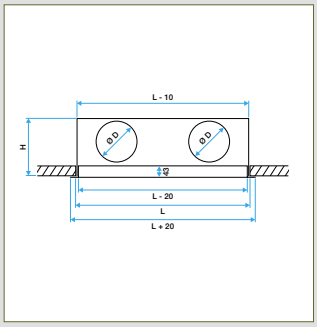

Diffuser with S2 or S3 attachment

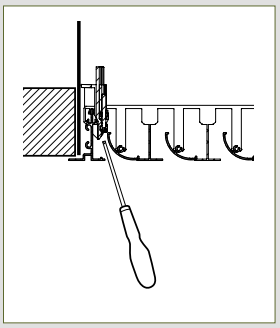

Setting the S3 fixing

Comfort airflows per meter for Lw < NR 35 and dimensions						
Nb of slots	Opening A (mm)	B (mm)	V (mm)	H (mm)	Ø D* (mm)	Airflow (m^3/h)
1	67	81	65	250	160	150
2	112	126	110	290	200	170
3	157	171	155	340	200	400
4	202	216	200	340	250	500
5	247	261	245	405	250	600
6	292	306	290	405	315	700
7	333	351	335	405	315	800
8	382	396	380	405	315	900

Openable in ceiling = L x A.
(*) based on 1 branch connection per metre. Other configurations: please contact us.

SELECTION SOFTWARE

KOANDA 3D is the new selection software which ensures the selection of the most suitable air diffusion products, ensuring a good compromise between thermal comfort, acoustics, aesthetics and less pressure drop. Selector Koanda 3D has a very intuitive and intuitive interface, which makes its use very pleasant and easy.

Slot diffusers

Diffusers with adjustable aluminium slots

LINED TP series - aluminium

LINED TP 1200 x 600 4 slots

ADVANTAGES

- *Adjustable air diffusion.*
- *Identical aesthetics for air supply and exhaust.*
- *Replaces a standard suspended ceiling tile.*
- *Suited to T frame or Fine-Line frameworks.*
- *Filtration possible on exhaust.*
- *Compatible with AldesArchitect ™ offer.*

RANGE (WITH CHOICE OF OPTIONS)

Designation	References
LINED TP S	11002307
LINED TP E	11002308
LINED TP EO	11002309
Plenum for LINED TP	11002114
FILTER FOR LINED TP EO	11003257

- Paint finish from RAL colour chart (contact us).
- Possible to reduce diffusion slot length according to airflow and/or desired aesthetic finish (contact us).
- Linear range without ceiling compensation plate (see previous pages).

DESCRIPTION

- Aluminium body, RAL 9010 30% matt.
- Aluminium deflectors, RAL 7024 anthracite grey or RAL 9010 white.
- Steel ceiling compensation plate RAL 9010 30% matt.
- Slot width 25 mm.
- LINED TP S: air supply model with dirigible deflectors.
- LINED TP E: exhaust model with fixed deflectors.
- LINED TP EO: exhaust model with fixed deflectors and openable central core for access to filter located in connection plenum.
Hinged core, push-push closure mechanism.
Only available with 3 slots or more.
- Concealed attachment to plenum using self-tapping screw.

FIELD OF APPLICATION

- Air supply or exhaust depending on model.
- Adjustable diffusion using dirigible deflector in the centre of each slot. Vertical airflow possible.
- Heating and air conditioning systems.
- Ceiling-mounted.
- Designed to replace a standard suspended ceiling tile, T frame or FineLine.
- Openable exhaust models with filter to replace that of ducted convector fan.

ACCESSORIES

- Connection plenum made of galvanised steel with side branch connection.
Acoustic or thermo-acoustic insulation on request (M1 fir rating on foam).
Equipped with brackets for attachment to concrete slab. Use suspension cables on page 178.
Note: the weight of the diffuser must not be borne by the suspended ceiling framework.
- G3 M1 filter included in plenum for openable exhaust diffusers.
- Spade damper fitted in plenum branch connection. Adjustable from front of diffuser.

SELECTION SOFTWARE

KOANDA 3D is the new selection software which ensures the selection of the most suitable air diffusion products, ensuring a good compromise between thermal comfort, acoustics, aesthetics and less pressure drop. Selector Koanda 3D has a very intuitive and intuitive interface, which makes its use very pleasant and easy.

DIMENSIONS

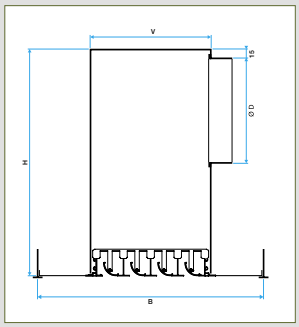

Ceiling mounting with TBAR profile

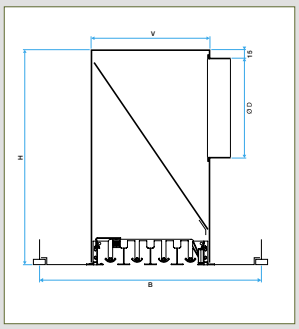

Ceiling mounting with Fine-Line profile

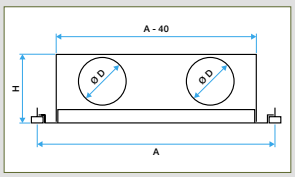

Ceiling mounting with Fine-Line profile

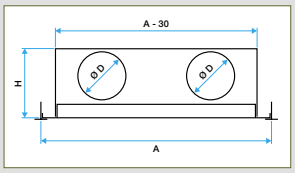

Ceiling mounting with TBAR profile

Dimensions			
Nb of slots	**V (mm)**	**H (mm)**	**Ø D (mm)**
1	65	252	160
2	110	292	200
3	155	292	200
4	200	342	250
5	245	342	250
6	290	407	315
7	335	407	315
8	380	407	315

Comfort airflows per meter for Lw < NR 35						
Nb of slots	**Ceiling lenght and connections numbers advised**					**Available ceiling widths**
	A = 600 mm	**A = 1200 mm**	**A = 1350 mm**	**A = 1500 mm**	**A = 1800 mm**	**B**
	Airflow (m³/h)					
1	90	180	205	225	270	300 / 600 / 675
2	160	325	365	405	485	300 / 600 / 675
3	240	480	540	600	725	300 / 600 / 675
4	300	600	675	750	900	300 / 600 / 675
5	360	720	815	900	1080	300 / 600 / 675
6	420	840	945	1050	1260	600 / 675
7	480	960	1080	1200	1440	600 / 675
8	540	1080	1215	1350	1620	600 / 675

Slot diffusers

Diffusers with adjustable aluminium slots

LINED SLIM series - aluminium

LINED air supply - 2 slots

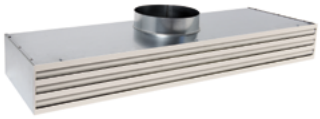

LINED with plenum

ADVANTAGES

- *Adjustable air diffusion.*
- *Identical aesthetics for air supply and exhaust.*
- *Filtration possible on exhaust.*
- *Possibility of linear strips.*
- *Available in anodised aluminium or epoxy paint finish.*
- *Compatible with AldesArchitect ™ offer.*

RANGE (WITH CHOICE OF OPTIONS)

Designation	References
LINED Slim S	11002294
LINED Slim E	11002295
LINED Slim EO	11002296
Plenum for LINED Slim	11002136
FILTER FOR LINED SLIM EO	11003258

- Air supply or exhaust diffusers. S2 or S3 attachment.
- Maximum length in one room 2000 mm. Beyond this distance, the diffuser requires 2000 mm sections and two end pieces of equal length (always between 1000 and 2000 mm).
- All intermediate lengths available in increments of 1 mm.
- Width up to 8 slots.
- Paint finish from RAL colour chart (contact us).

DESCRIPTION

- Aluminium body, natural anodised or epoxy paint finish, RAL 9010 30% matt.
- Aluminium deflectors, RAL 7024 anthracite grey or RAL 9010 white.
- Hollow-joint frame, 25 mm wide.
- Slot width 25 mm.
- LINED S: air supply model with dirigible deflectors.
- LINED E: exhaust model with fixed deflectors.
- LINED EO: exhaust model with fixed deflectors and opening central core for access to filter located in connection plenum.

Hinged core, push-push closure mechanism.
Only available with 3 slots or more.

- Concealed attachment to plenum, either adjustable and accessible below the diffuser (type S3), or directly using self-tapping screws on the sides of the plenum (type S2)

Note: the S2 attachment method is recommended for suspended ceilings and incompatible with non-removable ceilings (plaster or BA13 plasterboard).

FIELD OF APPLICATION

- Air supply or exhaust depending on model.
- Adjustable diffusion using dirigible deflector in the centre of each slot. Vertical airflow possible.
- Opening exhaust models with filter to replace that of ducted convector fan.
- Ceiling-mounted.
- Possibility of linear strips (except opening versions).

ACCESSORIES

- Corner pieces available in 90° or 135° versions (contact us for details).
- Connection plenum made of galvanised steel with side branch connection.

Acoustic or thermo-acoustic insulation on request (M1 fir rating on foam).
Equipped with brackets for attachment to concrete slab.
Use suspension cables on page 176.
Note: the weight of the diffuser must not be borne by the ceiling.

- G3 M1 filter included in plenum for opening exhaust diffusers.
- Spade damper fitted in plenum branch connection. Adjustable from front of diffuser.

DIMENSIONS

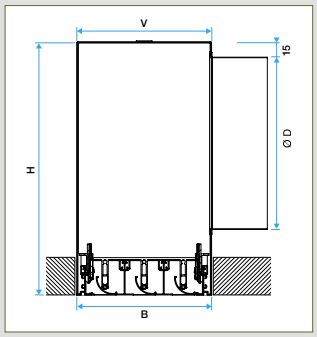

Lined S Slim with plenum, S3 attachment

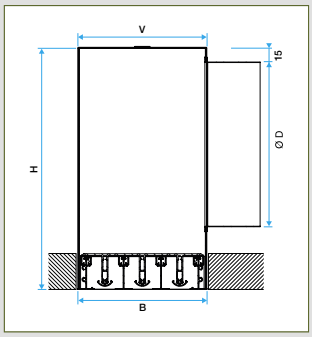

Lined E slim with plenum, S2 attachment

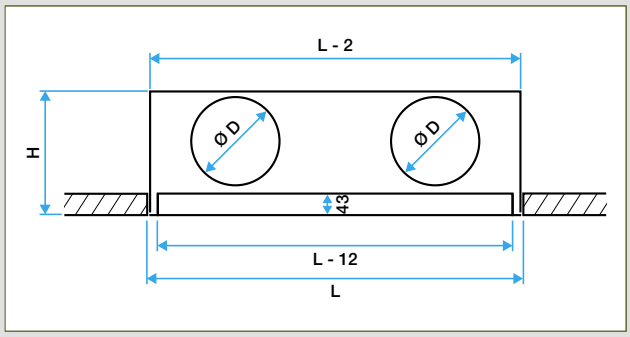

Diffuser with S2 or S3 attachment

Comfort airflows per meter for Lw < NR 35 and dimensions						
Nb of slots	Opening A (mm)	B (mm)	V (mm)	H (mm)	Ø D* (mm)	Airflow (m³/h)
1	67	81	65	250	160	150
2	112	126	110	290	200	170
3	157	171	155	340	200	400
4	202	216	200	340	250	500
5	247	261	245	405	250	600
6	292	306	290	405	315	700
7	333	351	335	405	315	800
8	382	396	380	405	315	900

Opening in ceiling = L x A.
(*) based on 1 branch connection per meter. Other configurations: please contact us.

SELECTION SOFTWARE

KOANDA 3D is the new selection software which ensures the selection of the most suitable air diffusion products, ensuring a good compromise between thermal comfort, acoustics, aesthetics and less pressure drop. Selector Koanda 3D has a very intuitive and intuitive interface, which makes its use very pleasant and easy.

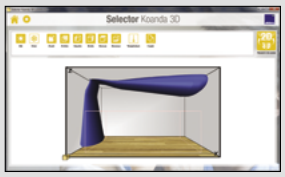

Slot diffusers

Diffusers with adjustable aluminium slots

LINED COMBINED series - aluminium

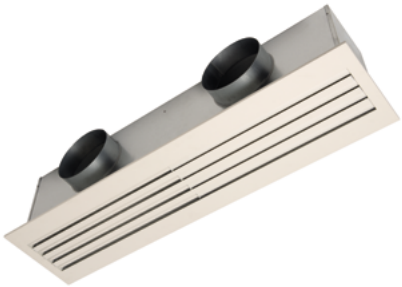

Lined Combined TP O diffuser and Plenum

ADVANTAGES

- *Space-saving : supply and extract in one unit*
- *Extremely low recirculation rates : < 5%**
- *Aesthetic and discreet: elegant and flush design*
- *Adaptable: any dimension, type of ceiling, or finishing - AldesArchitect™*

RANGE (WITH CHOICE OF OPTIONS)

Designation	References
LINED COMBINED STD openable	11002377
LINED COMBINED SLIM openable	11002378
LINED COMBINED TP openable	11002379
LINED COMBINED STD FIXED	11002387
LINED COMBINED SLIM FIXED	11002388
LINED COMBINED TP FIXED	11002389
PLENUM LINED COMBINED	11002197
PLENUM LINED COMBINED SLIM	11002198
PLENUM LINED COMBINED TP	11002199
Filter for LINED Combined openable	11002404
Filter for LINED Combined TP openable	11002405
Filter for LINED Combined Slim openable	11002406

DESCRIPTION

- A Diffuser and a specific plenum box, enabling simultaneous extraction and supply. For all types of applications and ventilation systems, especially in air conditioning.
- Internal (plenum) and external recirculation rates extremely low (<5%*) ensuring excellent efficiency in air diffusion, and thus thermal and acoustic comfort for the occupants of the room.
- Adaptable diffusion thanks to its adjustable deflecter positioned centrally in the slot. Possibility of vertical supply.
- Installation: in the ceiling
- Available in Standard, TP or Slim versions allowing adaptation to different types and styles of ceiling integration.
- LINED COMBINED / SLIM / TP O : supply + extract (openable for accessing the filter via a push-push system)
- LINED COMBINED / SLIM / TP F : supply + extract (non-openable/fixed, no filter)

FIELD OF APPLICATION

- The extraction and supply sides are beautifully integrated into the same single diffuser and the same slots of 25mm in width.
- The supply and extract deflectors are discreetly separated so as to ensure the lowest recirculation rate possible.
- The specific plenum box in galvanized steel, is divided into two equal sections for supply and extract. It is possible to add a filter on the extract side to replace, for example, that of a fan coil.
- Supply side: the adjustable deflectors enable horizontal diffusion in one or two directions, or vertical, depending on the slots. The deflectors are positioned int he center of each slot so as to ensure an excellent air diffusion with Coanda effect, as well as remaining pleasing to the eye.
- Extraction side: on openable versions, a filter is installed so as to ensure the filtration of fresh air before the installed ventilation unit. The central section of the unit is mounted on hinges that can be opened and closed via a push-push system (from 3 slots).

DETAILS

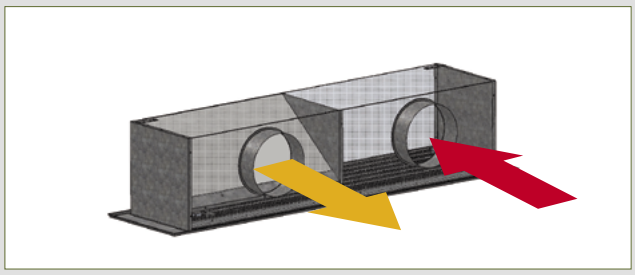

LINED COMBINED O
Left side version with its plenum. Closed position.

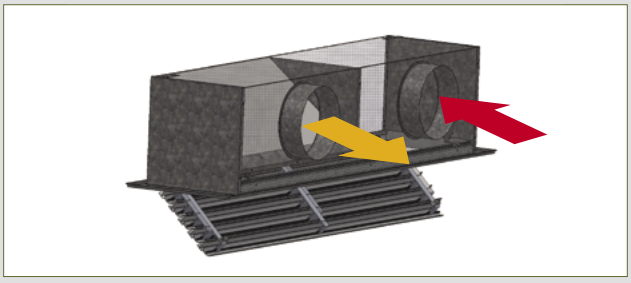

LINED COMBINED O
Left sided version with its plenum. Open position.

DIGITAL TOOLS

- KOANDA 3D is the new selection software which ensures the selection of the most suitable air diffusion products, ensuring a good compromise between thermal comfort, acoustics, aesthetics and less pressure drop. Selector Koanda 3D has a very intuitive and intuitive interface, which makes its use very pleasant and easy.

* In internal and external recirculation rates. Test conducted on models of 1000-14000mm 4-5 slots, in laboratory vs the leaders in the market for linear combined solutions (supply + extract in the same diffuser and plenum).

LINED COMBINED series - aluminium

ADDITIONAL OFFERS

DIFFUSER OPTIONS:

• Deflectors in aluminum painted in dark grey RAL 7024 or white RAL 9010 30% or Anodised alu.
• Diffuser in anodized steel or painted in white RAL 9010 30%.
• RAL finishing upon request: consult the list of colors available in the appendix of the Air Diffusion Compulsor.
• Compatible AldesArchitect™

PLENUM BOX OPTIONS

• S2 : Concealed attachment method using self-tapping screws, accessible via the sides of the diffuser. PLEASE NOTE: This system is not compatible with plasterboard, staff or BA13 ceilings.
• S3 : Concealed attachment method using screws and clips, accessible from below the diffuser. Recommended for plasterboard, staff or BA13 ceilings.
• Attachment of the the plenum (which is in turn attached to the diffuser with an S2 or S3 attachment) to the cement ceiling via mounting brackets on the plenum. CAUTION: the ceiling grid should never bear the weight of the diffuser!
• Insulation possible inside the plenum box:
 - Acoustic (suggested for the extraction side): 20mm of melamine on the side facing the spigot.
 - Thermal-acoustic (suggested for the supply side): 1 side with melamine and 4 sides with 5mm of mousse.
• Dampers possible integrated into the plenum, accessible from the front side of the diffuser on non-TP version (only available on FIXED or non-openable versions from 2 slots).
• G3 filter included in the extraction side of the plenum for openable versions.
• Possibility of adding a fresh air spigot in diameters 80, 100 or 125 (positioned across from the extract spigot).
• Possibility of having diffusers that are longer than the plenum with sections that do not diffuse, for design purposes.
• Oblong spigots possible in equivalents of Ø200 and Ø250 diameters.
• Possibility of delivering the STANDARD or SLIM models already mounted or not, onto the plenum. For the TP versions, they are always mounted.
• Choice of left or right versions (extraction side)

DIMENSIONS

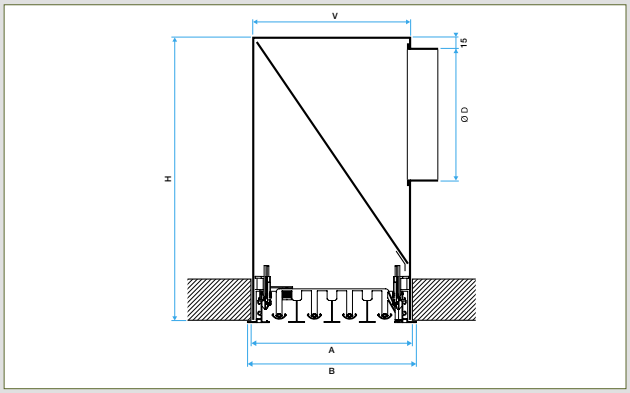

LINED COMBINED O

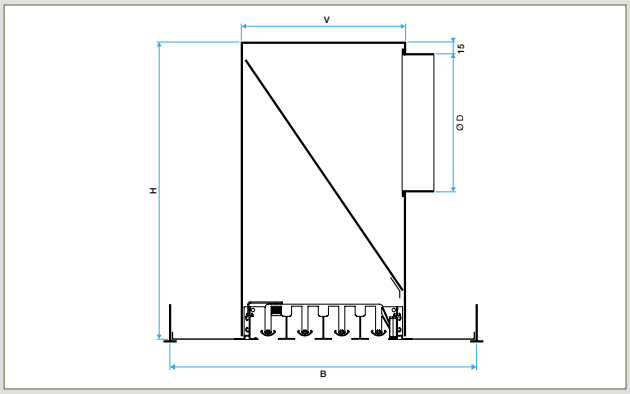

LINED COMBINED O TP

DIMENSIONS

LINED COMBINED STANDARD and COMBINED SLIM - FIXED and OPENING													
Number of slots	Comfort airflow level < 35dBA (m3/h)	L (mm)	Slot length		Plenum length		Reserve A (mm)		B (mm)		V (mm)	H (mm)	Plenum spigot dia Ø (mm)
			Std	Slim	Std	Slim	Std	Slim	Std	Slim			
1*	100	500-2000	L-20	L-12	L-10	L-2	75	70	81	65	65	250	160
2*	150	550-2000	L-20	L-12	L-10	L-2	120	115	126	110	110	290	200
3	200	550-2000 (1500 for opening)	L-20	L-12	L-10	L-2	165	160	171	155	155	290	200
4	250	650-2000 (1500 for opening)	L-20	L-12	L-10	L-2	210	205	216	200	200	340	250
5	350	650-2000 (1500 for opening)	L-20	L-12	L-10	L-2	255	250	261	245	245	340	250
6	350	750-2000 (1500 for opening)	L-20	L-12	L-10	L-2	300	295	306	290	290	405	315
7	400	750-2000 (1500 for opening)	L-20	L-12	L-10	L-2	345	340	351	335	335	405	315
8	450	750-2000 (1500 for opening)	L-20	L-12	L-10	L-2	390	385	396	380	380	405	315

LINED COMBINED TP - FIXED and OPENING									
Number of slots	Comfort airflow < 35 dB(A) (m3/h)	A (mm) - length of ceiling tile	Length of slot TBAR (mm)	Length of slot FLINE (mm)	Length of Plenum (mm)	B (mm) - width of ceiling tile	V (mm)	H (mm)	Plenum spigot Dia Ø (mm)
1*	100	600-1600	A-70	A-82	longueur fente + 10	200-700	65	250	160
2*	150	600-1600	A-70	A-82	longueur fente + 10	200-700	110	290	200
3	200	600-1600	A-70	A-82	longueur fente + 10	200-700	155	290	200
4	250	650-1600	A-70	A-82	longueur fente + 10	250-700	200	340	250
5	350	650-1600	A-70	A-82	longueur fente + 10	300-700	245	340	250
6	400	750-1600	A-70	A-82	longueur fente + 10	350-700	290	405	315
7	450	750-1600	A-70	A-82	longueur fente + 10	400-700	335	405	315
8*	450	750-1600	A-70	A-82	longueur fente + 10	450-700	380	405	315

*only concerns the F versions (fixed, non-openable)

Slot diffusers

Diffusers with fixed aluminium slots

ALD 610 - ALD 620 series - aluminium

ALD 613 diffuser

ADVANTAGES

- *Small width.*
- *Built-in damper.*

DESCRIPTION

- Body and deflectors made of anodised aluminium, natural satin hue.
- Slide-operated damper built into diffuser.
- Concealed screw attachment in connection plenum, accessible from underside of diffuser. The plenum is equipped with brackets for attachment to a concrete slab. Use the suspension cables on page 176.

FIELD OF APPLICATION

- Air supply or exhaust, fixed horizontal diffusion with up to 4 slots.
- Heating and air conditioning systems.
- Ceiling-mounted.
- Air supply on right or left possible depending on model.

ADDITIONAL RANGE

- Paint finish from RAL colour chart (contact us).

ACCESSORIES

- Connection and regulation plenum with side branch connection, galvanised steel, insulation version on request.

DIMENSIONS

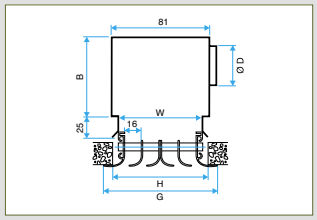

ALD 610 - 620 diffuser

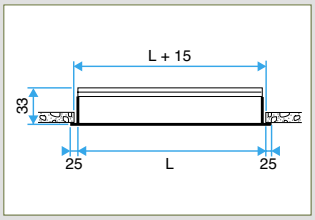

ALD 610 - 620 diffuser

Comfort airflows for Lw < NR 30 and dimension						
Designation	**B (mm)**	**Ø D (mm)**	**G (mm)**	**H (mm)**	**W (mm)**	**Airflow (m^3/h) per meter**
ALD 611	155	125	50	35	28	100
ALD 612	155	125	67	45	46	175
ALD 622	155	125	74	45	46	175
ALD 613	190	160	84	70	63	250
ALD 623	190	160	91	70	63	250
ALD 614	190	160	101	85	80	325
ALD 624	190	160	108	90	80	325

Air diffusion direction							
Models	ALD611	ALD612	ALD622	ALD613	ALD623	ALD614	ALD624
Air diffusion directions							

Dimensions for L 600 (**) or L 1200 (***) ceiling tiles.

RANGE

Designation	N°. slots	References
1150		
ALD 611 aluminium finish	1	11051752
ALD 611 white finish	1	11051852
ALD 612 aluminium finish	2	11051756
ALD 612 white finish	2	11051856
ALD 613 aluminium finish	3	11051764
ALD 613 white finish	3	11051864
ALD 614 aluminium finish	4	11051772
ALD 614 white finish	4	11051872
ALD 622 white finish	2	11051860
ALD 623 white finish	3	11051868
ALD 624 white finish	4	11051876
1500		
ALD 611 aluminium finish	1	11051753
ALD 612 white finish	2	11051857
ALD 613 aluminium finish	3	11051765
ALD 613 white finish	3	11051865
ALD 614 aluminium finish	4	11051773
ALD 614 white finish	4	11051873
ALD 624 white finish	4	11051877
550		
ALD 611 aluminium finish	1	11051750
ALD 611 white finish	1	11051850
ALD 612 aluminium finish	2	11051754
ALD 612 white finish	2	11051854
ALD 613 aluminium finish	3	11051762
ALD 613 white finish	3	11051862
ALD 614 white finish	4	11051870
ALD 622 white finish	2	11051858
ALD 623 white finish	3	11051866
ALD 624 white finish	4	11051874
900		
ALD 611 aluminium finish	1	11051751
ALD 611 white finish	1	11051851
ALD 312 aluminium finish	2	11051755
ALD 612 white finish	2	11051855
ALD 613 aluminium finish	3	11051763
ALD 613 white finish	3	11051863
ALD 614 aluminium finish	4	11051771
ALD 614 white finish	4	11051871
ALD 622 aluminium finish	2	11051759
ALD 622 white finish	2	11051859
ALD 623 aluminium finish	3	11051767
ALD 623 white finish	3	11051867
ALD 624 aluminium finish	4	11051775
ALD 624 white finish	4	11051875

ACCESSORIES

Designation	N°. slots	References
550		
ALP 111	1	11053100
ALP 112	2	11053104
ALP 113	3	11053112
ALP 114	4	11053120
ALP 123	3	11053116

Designation	N°. slots	References
1150		
ALP 111	1	11053102
ALP 112	2	11053106
ALP 113	3	11053114
ALP 114	4	11053122
ALP 122	2	11053110

Designation	N°. slots	References
1500		
ALP 111	1	11053103
ALP 112	2	11053107
ALP 113	3	11053115
ALP 114	4	11053123

Designation	N°. slots	References
900		
ALP 111	1	11053101
ALP 112	2	11053105
ALP 113	3	11053113
ALP 114	4	11053121
ALP 123	3	11053117

Swirl diffusers

Square adjustable/fixed swirl diffusers

SF 785 - SF 786 series - steel

SF 785 diffuser

SF 786 diffuser

ADVANTAGES

- *Adjustable air diffusion.*
- *Ideal for buildings requiring high mixing rate.*

RANGE (WITH CHOICE OF OPTIONS)

Dimensions	References	Discount family
SF 785 F7 diffuser		
400 x 400	11051130	***10***
500 x 500	11051131	***10***
600 x 600	11051132	***10***
SF 786 F7 diffuser		
600 x 600	11051133	***10***

DESCRIPTION

- Steel finish, epoxy paint RAL 9010 white 85%.
- Adjustable vanes made of black polypropylene (SF 785) or fixed vanes made of steel (SF 786).
- Attachment to plenum using central screw (F7). This attachment method is not compatible with non-removable plaster or BA13 plasterboard ceilings.
- Concealed attachment to concrete slab using brackets on connection plenum. Use the suspension cables on page 176.

FIELD OF APPLICATION

- Air supply or exhaust, fixed horizontal diffusion via a single slot.
- Heating and air conditioning systems.
- Ceiling-mounted.
- Possible air supply on right R or left L or exhaust E (no deflection) depending on model.
- Built-in plenum with circular connection.

ADDITIONAL RANGE

- Paint finish from RAL colour chart (contact us).
- Insulated plenum (contact us for details).
- Plenum with branch connection on top (contact us).
- Various finishes and possible replacement of 600 x 600 mm ceiling tile at low airflows: SF 775 range (contact us).

ACCESSORIES

- RE connection plenum (side branch connection).

Note: plenums are equipped with a flow splitter at standard.

Dimensions	References	Discount family
RE plenum		
400 x 400	11002950	***10***
500 x 500	11002950	***10***
600 x 600	11002950	***10***

AVAILABLE CHOICE OF OPTIONS

Designation	Reference
2 faces insulation	IF2
5 faces insulation	IF5
Bridge system fixing - F7	F7
2 connection plenum on the same face	PIQ3
Opposed 2 connections plenum	PIQ4
2 connections plenum at 90°	PIQ5
Perforated metal distribution	0

DIMENSIONS

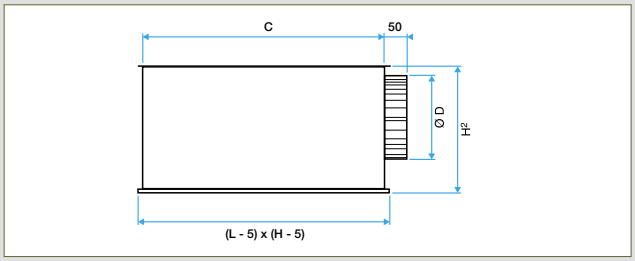

SF 785 diffuser with RE plenum

Comfort airflows for Lw < NR 30 and dimensions				
L x H (mm)	C (mm)	Ø D (mm)	H2 (mm)	Airflow (m^3/h)
400 x 400	360	200	300	250
500 x 500	460	200	300	450
600 x 600*	560	250	350	550
* Dimensions suited to standard 600 x 600 mm tiles.				

SELECTION SOFTWARE

KOANDA 3D is the new selection software which ensures the selection of the most suitable air diffusion products, ensuring a good compromise between thermal comfort, acoustics, aesthetics and less pressure drop. Selector Koanda 3D has a very intuitive and intuitive interface, which makes its use very pleasant and easy.

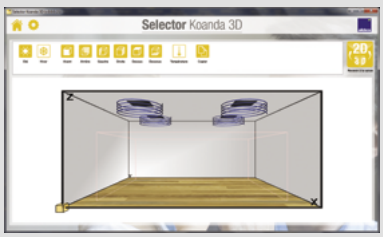

Swirl diffusers

Twisted swirl jet diffusers

Twisted 850 series - steel

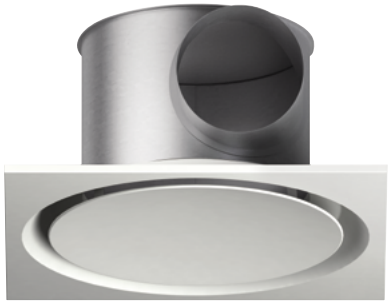

Twisted 850 air supply for ceiling tiles

ADVANTAGES

- *Installed to replace a 600 x 600 mm or 675 x 675 mm ceiling tile.*
- *Supplied with dedicated plenum.*
- *Version suited to plaster ceilings.*
- *Blends perfectly with the majority of commercial building interiors.*
- *Ideal for variable airflow systems.*
- *Excellent mixing rate.*
- *Accepts high temperature differences.*
- *Identical air supply and exhaust models.*
- *Easy access to the filter on the exhaust model.*
- *Compatible with AldesArchitect™ offer.*

RANGE

Dimensions	References	Discount family
Twisted 850 Air supply diffuser with plenum included - 600 x 600		
Ø 200	11051163	***10***
Twisted 850 Air supply diffuser with insulated plenum included - 600 x 600		
Ø 200	11051165	***10***
Twisted 850 W Exhaust diffuser opening with filter and plenum included - 600 x 600		
Ø 200	11051164	***10***
Twisted 850 air supply diffuser with plenum included - 625 x 625		
Ø 200	11003365	***10***

DESCRIPTION

Concept

• High induction air diffusion using air jet rotation inside plenum.
By maintaining a sufficient discharge speed, the diffusion cone ensures a perfect Coanda effect (ceiling effect) and a helical air jet.
This swirl air jet will cause the ambient air to move, thereby mixing it with the air supply to ensure homogeneous temperatures in occupied areas.

FIELD OF APPLICATION

- Ceiling diffuser to replace 600 x 600 mm or 675 x 675 mm suspended ceiling tile.
- Version suited to plaster or BA13 plasterboard type ceilings.
- Supplied with connection plenum.
- Air supply or exhaust, high-induction fixed diffusion with swirl air jet.
- Wide airflow range from a single size of diffuser.
- Heating and air conditioning systems requiring high mixing rate.
- Ideal for cold and hot air supply (air conditioning) with high T° differences under low ceiling heights.
- Ideal for variable-airflow systems (ducted convector fans).

ACCESSORIES

Dimensions	References	Discount family
Pack of 5 spare filtersW 850		
Ø 200	11053949	***80***

SELECTION SOFTWARE

KOANDA 3D is the new selection software which ensures the selection of the most suitable air diffusion products, ensuring a good compromise between thermal comfort, acoustics, aesthetics and less pressure drop. Selector Koanda 3D has a very intuitive and intuitive interface, which makes its use very pleasant and easy.

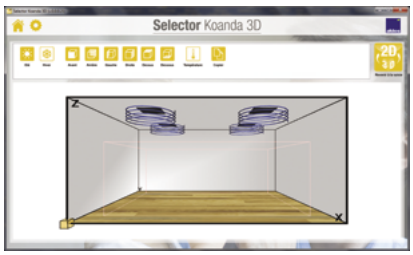

DIMENSIONS

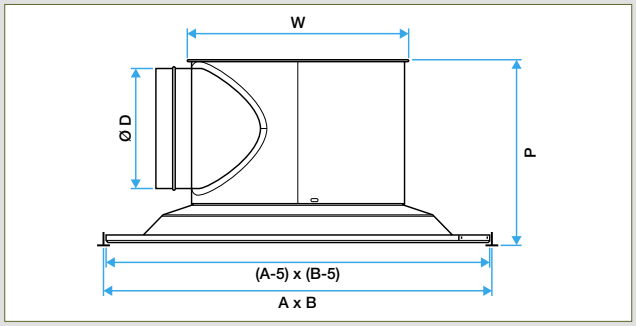

Twisted 850 diffuser for square tiles.

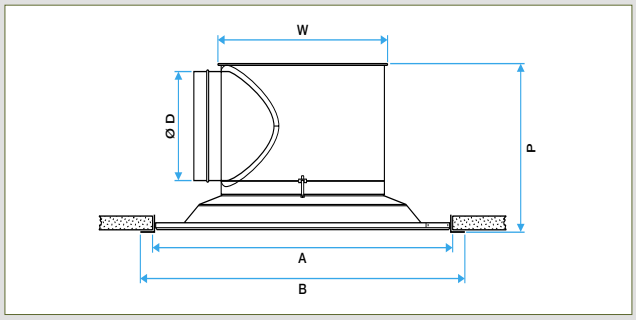

Twisted 850 diffuser for plaster or BA13 plasterboard ceiling.

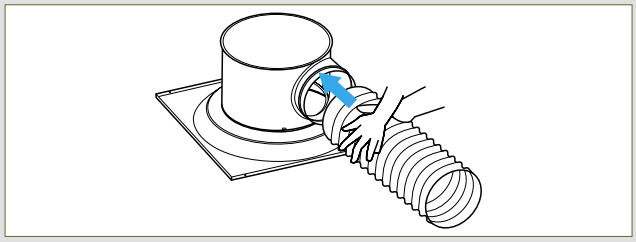

Connection to flexible duct

Diffusers for suspended ceilings							
Comfort airflow levels for LW 40 db(A) and dimensions							
Assembly	A x B* (mm)	Opening A (mm)	B (mm)	Ø W (mm)	Ø D (mm)	P (mm)	Airflow (m^3/h)
	600 x 600	-	-	366	200	298	150 to 600
	675 x 675	-	-	366	200	298	150 to 600
Staff / BA13	-	605 x 605	651 x 651	366	200	298	150 to 600
(*) Nominal dimensions of tile. See selection table at the end of chapter.							

Swirl diffusers

Twisted swirl jet diffusers

Twisted 850 series - steel

Twisted 850 air supply for plaster ceilings

Twisted 850 opening with filter on exhaust air

ADVANTAGES

- *Installed to replace a 600 x 600 or 675 x 675 ceiling tile.*
- *Supplied with dedicated plenum.*
- *Version suited to plaster ceilings.*
- *Blends perfectly with the majority of commercial building interiors.*
- *Ideal for variable airflow systems.*
- *Excellent mixing rate.*
- *Accepts high temperature differences.*
- *Identical air supply and exhaust models.*
- *Easy access to the filter on the exhaust model.*
- *Compatible with AldesArchitect ™ offer.*

RANGE (WITH CHOICE OF OPTIONS)

Dimensions	References	Discount family
Twisted 850 Air supply diffuser with Plenum included		
Ceiling tiles 600 x 600	11003361	***10***
Ceiling tiles 675 x 675	11003363	***10***
Plaster 600 x 600	11003371	***10***
Twisted 850 W Exhaust diffuser opening with filter and plenum included		
Ceiling tiles 600 x 600	11003362	***10***
Ceiling tiles 675 x 675	11003364	***10***
Plaster 600 x 600	11003372	***10***
Twisted 850 without plenum for loose air exhaust		
Ceiling tiles 600 x 600	11003366	***10***
Ceiling tiles 675 x 675	11003368	***10***

DESCRIPTION

Description

- Diffusion cone and central disk made of painted steel.
- Steel compensation plate suited to 600 x 600 mm or 675 x 675 mm ceiling tiles, with Tbar or Fine-Line framework.
- Aesthetic mounting frame (white aluminium) for plaster ceiling version.
- Air supply model equipped with a fixed central disk, serving as a deflector.

Note: on the plaster ceiling version the central disk is removable to enable installation in non-removable ceilings.

- Exhaust air model equipped with removable central disk and elliptical filter. Access to filter by quick and easy opening of the central plate.
- Cylindrical plenum made of galvanised steel for direct connection to a Ø 200 mm circular duct, supplied as standard.
- Version without plenum available for direct exhaust or direct connection to Ø 200 or Ø 250 circular connection. Non-opening diffuser only.

Caution: this model should not be used for air supply applications.

- Epoxy paint finish RAL 9010, 30 % matt.
- Attachment to concrete ceiling using bracket on the plenum.

Note: the weight of the diffuser must not be borne by the frame of the suspended ceiling. Used threaded rods or suspension cables on page 176.

ACCESSORIES

- G2 class elliptical flat filter compliant with HQE label, supplied with exhaust diffuser. M1 fire protection rating
- Aesthetic mounting frame (white aluminium) for plaster ceiling version.
- Bridge system to facilitate installation in non-removable ceilings (F7 attachment).
- Acoustic insulation (15 mm-thick M1 melamine foam inside the plenum).
- Thermal insulation (5 mm M1 polyurethane foam outside the plenum).

AVAILABLE CHOICE OF OPTIONS

Designation	Code
Plafond fine-line	FL8x15
Other RAL groupe 1	RAL1
Other RAL groupe 2	RAL2
Other RAL groupe 3	RAL4
Acoustic insulation	ACOU
Thermal insulation	THER
Back connection plenum	Ø 200
Back connection plenum	Ø 250
Bridge system fixing - F7	F7

DIMENSIONS

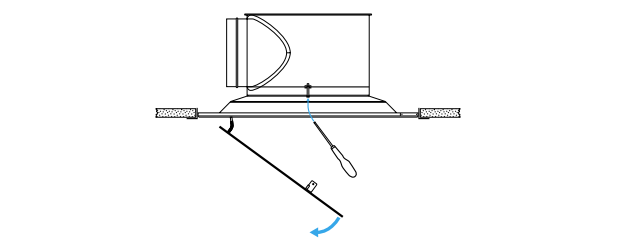

Twisted 850 direct exhaust for square tiles.

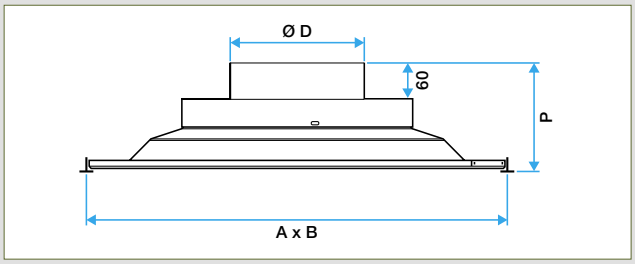

Installation of Twisted plaster ceiling version with F7 bridge

Comfort airflows for Lw < NR 35 and dimensions			
Dimensions A x B* (mm)	Ø D (mm)	P (mm)	Airflow (m^3/h)
600 x 600	200 or 250	170	150 to 600
675 x 675	200 or 250	170	150 to 600
* Nominal ceiling tile dimensions. See selection table at the end of chapter.			

SELECTION SOFTWARE

KOANDA 3D is the new selection software which ensures the selection of the most suitable air diffusion products, ensuring a good compromise between thermal comfort, acoustics, aesthetics and less pressure drop. Selector Koanda 3D has a very intuitive and intuitive interface, which makes its use very pleasant and easy.

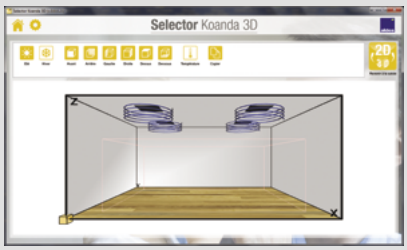

Swirl diffusers

Adjustable circular swirl jet diffusers

AR 883 series - aluminium

Diffuser AR 883

ADVANTAGES

- *Adjustable air diffusion.*
- *Ideally suited for high-ceiling buildings or those requiring a good mixing rate.*
- *Motorised adjustment of diffuser size according to needs, for excellent comfort management.*

RANGE (WITH CHOICE OF OPTIONS)

Dimensions	References	Discount family
Ø 250	11002361	***10***
Ø 315	11002362	***10***
Ø 400	11002363	***10***
Ø 500	11002364	***10***
Ø 630	11002365	***10***

DESCRIPTION

- Aluminium body and diffusion vanes.
- Aluminium finish, epoxy paint according to RAL colour chart.
- Concealed attachment to plenum using a screw on the neck of the diffuser. The plenum is equipped with lugs for attachment to a concrete ceiling. Use the suspension cables on page 176.

FIELD OF APPLICATION

- Air supply: adjustable high-induction diffusion by swirl jet
- Ideal for air conditioning systems with high T° difference in high-ceiling buildings.
- Adjustable, motorised (or manual) diffusion for optimum supply in both winter and summer.
- High mixing rate.
- Ceiling-mounted.

AVAILABLE OPTIONS

- Proportional 24 motor.
- On/Off 230 V motor..
- Paint finish from RAL colour chart.

ACCESSORIES

- Connection plenum - side branch connection.

Dimensions	References	Discount family
LRE plenum - side branch connection		
Ø 250	11053313	***10***
Ø 315	11053314	***10***
Ø 400	11003266	***10***
Ø 500	11003268	***10***

AVAILABLE CHOICE OF OPTIONS

Dimensions	References	Discount family
MOTOR on/off M1 230V (mounted option)		
Ø 250	M1	***10***
Ø 315	M1	***10***
Ø 400	M1	***10***
Ø 500	M1	***10***
Ø 630	M1	***10***
MOTOR proportional M3 24V (mounted option)		
Ø 250	M3	***10***
Ø 315	M3	***10***
Ø 400	M3	***10***
Ø 500	M3	***10***
Ø 630	M3	***10***

DIMENSIONS

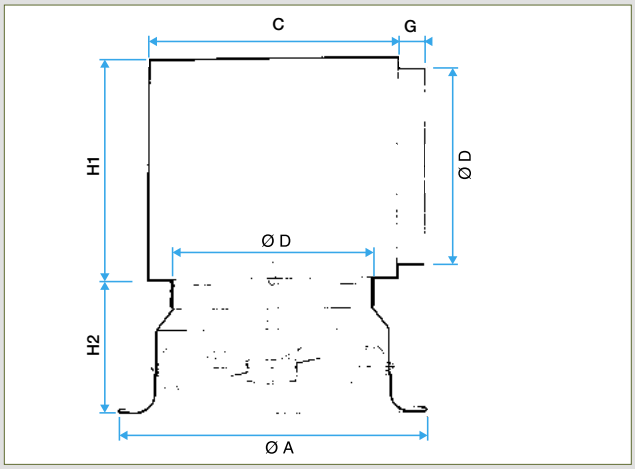

AR 883 diffuser with LRE plenum

Comfort airflows for Lw < NR 40 and dimensions							
Ø D (mm)	C (mm)	Ø A (mm)	G (mm)	H1 (mm)	H2 (mm)	Airflow (m^3/h)	Airflow in cooling position (m^3/h)
250	310	425	50	300	225	500	450
315	375	500	50	365	240	1000	750
400	460	615	60	450	280	1600	900
500	560	850	70	550	320	2500	1400
630	690	1070	70	680	410	6000	1600
Selection table on the end of chapter.							

SELECTION SOFTWARE

KOANDA 3D is the new selection software which ensures the selection of the most suitable air diffusion products, ensuring a good compromise between thermal comfort, acoustics, aesthetics and less pressure drop. Selector Koanda 3D has a very intuitive and intuitive interface, which makes its use very pleasant and easy.

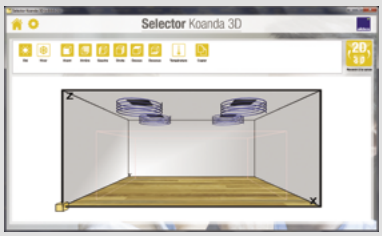

Swirl diffusers

Adjustable circular swirl jet diffusers

AR 883 Thermo series - aluminium

AR 883 Thermo diffuser

ADVANTAGES

- *Adjustable air diffusion.*
- *Ideally suited for high-ceiling buildings or those requiring a good mixing rate.*
- *Automatic adjustment of diffuser size according to temperature needs, for excellent comfort management in all seasons.*
- *No electrical connections required.*

RANGE

Dimensions	References	Discount family
AR 883 THERMO Thermostatic diffuser		
Ø 250	11051031	***10***
Ø 315	11051032	***10***
Ø 400	11051033	***10***
Ø 500	11051034	***10***
Ø 630	11051035	***10***
Ø 800	11051036	***10***

DESCRIPTION

- Aluminium body and diffusion vanes.
- Heat-sensitive spring made of nickel-titanium alloy to automatically toggle the diffusion angle according to the temperature of the blown air:
- «winter» position (heating) for de-stratification of hot air.
- «summer» position (cooling) for perfect management of air speeds in the occupied areas.
- «Winter» and «summer» diffusion angles adjustable on site using screws.
- Aluminium finish, epoxy paint RAL 9010 white 85%.
- Concealed attachment to plenum using a screw on the neck of the diffuser. The plenum is equipped with lugs for attachment to a concrete ceiling.

Use the suspension cables on page 176.

FIELD OF APPLICATION

- Air supply: adjustable high-induction diffusion by swirl jet
- Ideal for air conditioning systems with high T° difference in high-ceiling buildings.
- Automatic vane orientation according to the temperature of the air supply for optimum operation both in winter and summer.
- No electrical connections required.
- High mixing rate.
- Ceiling-mounted.

ADDITIONAL RANGE

- Motorisable version (AR 883 M1): see previous page.
- Manual version : see previous page.
- Plenums insulated on 2 or 5 sides.
- Paint finish from RAL colour chart (contact us).

ACCESSORIES

- Connection plenum - side branch connection.

Dimensions	References	Discount family
LRE plenum Side branch connection		
Ø 250	11053313	***10***
Ø 315	11053314	***10***
Ø 400	11053316	***10***
Ø 500	11053318	***10***

DIMENSIONS

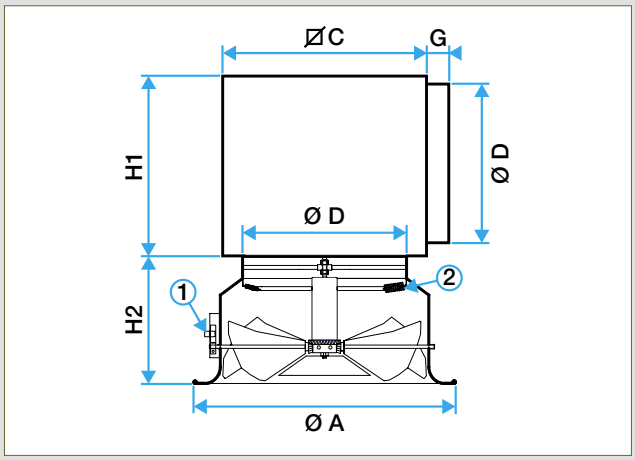

AR 883 diffuser with RE plenum
1- Manual adjustment of «winter» and «summer» angles.
2- Heat-sensitive spring.

Comfort airflow levels for Lw < NR 40 and dimensions							
Ø D (mm)	C (mm)	Ø A (mm)	G (mm)	H1 (mm)	H2 (mm)	Airflow (m^3/h)	Airflow in cooling position (m^3/h)
250	310	425	50	300	225	500	450
315	375	500	50	365	240	1000	750
400	460	615	60	450	280	1600	900
500	560	850	70	550	320	2500	1400
630	-	1070	-	-	410	6000	1600
800	-	1020	-	-	390	9000	2700
Selection table on the end of chapter.							

SELECTION SOFTWARE

KOANDA 3D is the new selection software which ensures the selection of the most suitable air diffusion products, ensuring a good compromise between thermal comfort, acoustics, aesthetics and less pressure drop. Selector Koanda 3D has a very intuitive and intuitive interface, which makes its use very pleasant and easy.

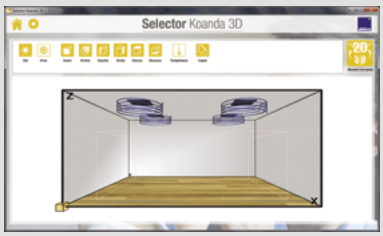

Swirl diffusers

Fixed swirl jet diffusers

SR 861 series - steel

SR 861 diffuser

ADVANTAGES

- *Ideal for cooling.*
- *Excellent mixing rate.*

RANGE

Dimensions	References	Discount family
Ø 125		
SR 861 diffuser	11051105	***10***
Ø 160		
SR 861 diffuser	11051106	***10***
Ø 200		
SR 861 diffuser	11051107	***10***
Ø 250		
SR 861 diffuser	11051108	***10***
Ø 315		
SR 861 diffuser	11051109	***10***

DESCRIPTION

- Steel body and diffusion vanes.
- Steel finish, epoxy paint RAL 9010 white 85%.
- Concealed attachment using a screw on the neck of the diffuser.

FIELD OF APPLICATION

- Air supply and exhaust: high-induction fixed diffusion.
- Heating and air conditioning systems requiring high mixing rate.
- Ideal for cold air supply (air conditioning).
- Ceiling-mounted.

ADDITIONAL RANGE

- Paint finish from RAL colour chart (contact us).
- Models to replace suspended ceiling tiles see next page.

ACCESSORIES

- LRE connection plenum (side branch connection) made of galvanised steel.
- BR damper: butterfly type with 2 or 4 V-shaped vanes (according to diameter). Steel construction. Precise control using worm screw.

Dimensions	References	Discount family
Ø 160		
LRE plenum Side branch connection	11053311	***10***
BR damper	11053220	***10***
Ø 200		
LRE plenum Side branch connection	11053312	***10***
BR damper	11053221	***10***
Ø 250		
LRE plenum Side branch connection	11053313	***10***
BR damper	11053222	***10***
Ø 315		
LRE plenum Side branch connection	11053314	***10***
BR damper	11053223	***10***

DIMENSIONS

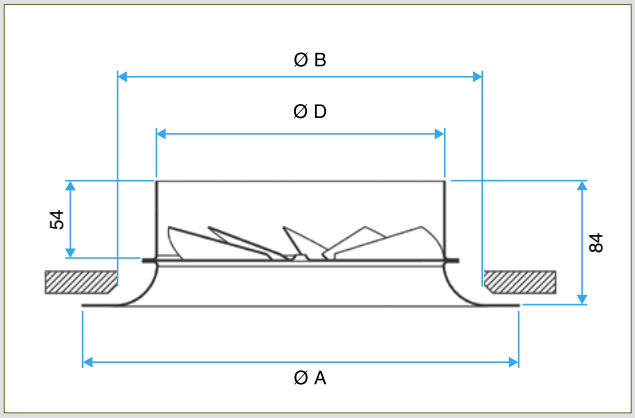

SR 861 diffuser

Comfort airflow levels for Lw < NR 30 and dimensions - SR 861					
Ø D (mm)	Ø A (mm)	Ø B (mm)	Ø plenum (mm)	P (mm)	Airflow (m^3/h)
125	225	175	-	-	80
160	250	210	160	300	130
200	300	250	200	350	200
250	350	300	250	400	280
315	415	360	315	460	420
See selection table at the end of chapter.					

SELECTION SOFTWARE

KOANDA 3D is the new selection software which ensures the selection of the most suitable air diffusion products, ensuring a good compromise between thermal comfort, acoustics, aesthetics and less pressure drop. Selector Koanda 3D has a very intuitive and intuitive interface, which makes its use very pleasant and easy.

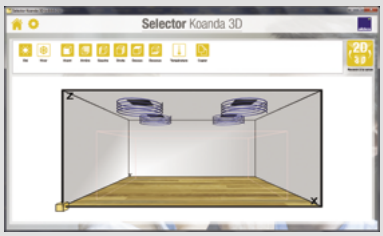

Swirl diffusers

Fixed swirl diffusers for tiles

SF 861 T series - steel

SF 861 T diffuser

ADVANTAGES

- *Designed for 600 x 600 mm suspended ceiling tiles.*
- *Efficient diffusion, simple to install.*
- *Excellent mixing rate.*

RANGE

Dimensions	References	Discount family
SF 861 T diffuser		
Ø 160	11051081	***10***
Ø 200	11051082	***10***
Ø 250	11051083	***10***
Ø 315	11051084	***10***

DESCRIPTION

- Steel body and diffusion vanes.
- Designed using a standard SF 861 diffuser built into a steel plate.
- Connection to circular duct or LRE plenum.
- Steel finish, epoxy paint RAL 9010 85%.
- Concealed attachment using a screw on the neck of the diffuser.

FIELD OF APPLICATION

- Ceiling attachment to replace a 600 x 600 mm suspended ceiling tile.
- Air supply or exhaust, high-induction fixed diffusion.
- Heating and air conditioning systems requiring high mixing rate.
- Ideal for cold air supply (air conditioning).

ADDITIONAL RANGE

- Paint finish from RAL colour chart (contact us).

ACCESSORIES

- BR damper: butterfly type with 2 or 4 V-shaped vanes (according to diameter).
- Steel construction. Precise control using worm screw.
- LRE connection plenum (side branch connection) made of galvanised steel.

Dimensions	References	Discount family
BR damper		
Ø 160	11053220	***10***
Ø 200	11053221	***10***
Ø 250	11053222	***10***
Ø 315	11053223	***10***
LRE plenum Side branch connection		
Ø 160	11053311	***10***
Ø 200	11053312	***10***
Ø 250	11053313	***10***
Ø 315	11053314	***10***

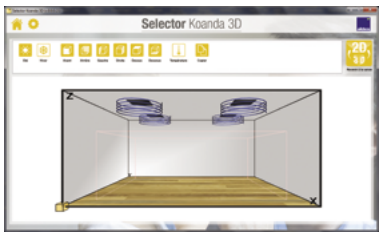

DIMENSIONS

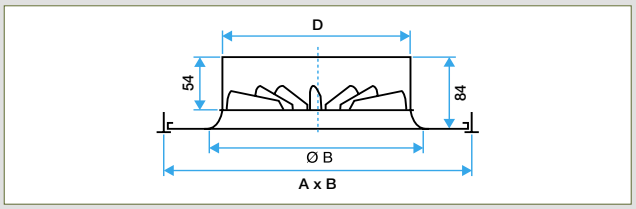

SF 861 T diffuser

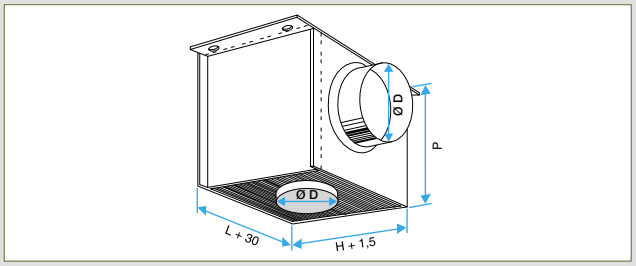

LRE plenum

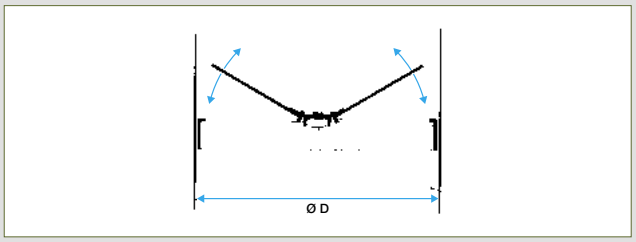

BR damper

Comfort airflow levels for Lw < NR 30 and dimensions					
Ø D (mm)	A x B* (mm)	Ø B (mm)	Ø branch connection for plenum (mm)	P (mm)	Airflow (m^3/h)
160	600 x 600	200	160	300	130
200	600 x 600	250	200	350	200
250	600 x 600	300	250	400	280
315	600 x 600	360	315	460	420
* Nominal ceiling tile dimensions. See selection table at the end of chapter.					

SELECTION SOFTWARE

KOANDA 3D is the new selection software which ensures the selection of the most suitable air diffusion products, ensuring a good compromise between thermal comfort, acoustics, aesthetics and less pressure drop. Selector Koanda 3D has a very intuitive and intuitive interface, which makes its use very pleasant and easy.

SC 984 series - steel

SC 984 diffuser

LREI plenum (5)

ADVANTAGES

- *Aesthetic design.*
- *Ideal for buildings requiring high mixing rate.*
- *Adjustable air diffusion.*
- *Version suited to 600 x 600 mm ceiling tiles.*

RANGE

- Price: contact us for details.
- Paint finish from RAL colour chart (contact us).

DESCRIPTION

- Front face made of steel plate RAL 9010.
- Rotating nozzles made of white plastic.
- Concealed attachment using a screw on the neck of the diffuser.
- T frame models suited to 600 x 600 mm ceiling tiles.

FIELD OF APPLICATION

- Air supply: adjustable diffusion.
- Heating and air conditioning systems.
- High mixing rate.
- Ceiling-mounted.

ACCESSORIES

- LREI plenum (5) insulated on 5 sides (side branch connection).
- Damper with control dial fitted on plenum branch connection (supplied as standard).

SELECTION SOFTWARE

KOANDA 3D is the new selection software which ensures the selection of the most suitable air diffusion products, ensuring a good compromise between thermal comfort, acoustics, aesthetics and less pressure drop. Selector Koanda 3D has a very intuitive and intuitive interface, which makes its use very pleasant and easy.

DIMENSIONS

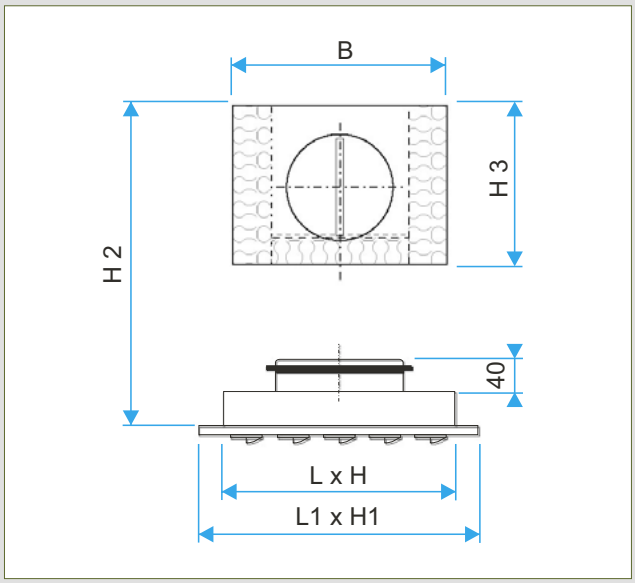

S984 diffuser with plenum

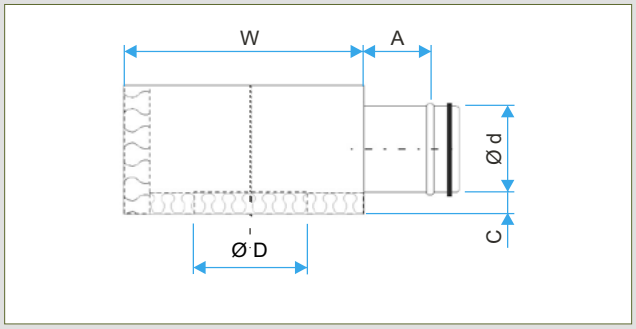

LREI plenum (5)

Comfort airflow levels for Lw < NR 35 and dimensions										
Ø D (mm)	W x H (mm)	L1 x H1 (mm)	Ø d (mm)	H2 (mm)	H3 (mm)	B (mm)	W (mm)	A (mm)	C (mm)	Airflow (m^3/h)
125	333	389	100	185	155	250	320	81	30	130
125	333	595*	100	185	155	250	320	81	30	130
160	333	389	125	210	180	300	380	91	40	210
160	333	595*	125	210	180	300	380	91	40	210
200	415	472	160	260	215	370	440	103	35	300
200	415	595*	160	260	215	370	440	103	35	300
250	554	595	200	315	255	465	520	123	30	480
315	554	595	250	360	300	550	580	144	25	600
* Models suited to standard 600 x 600 mm suspended ceiling tiles.										

SP 391 series - steel

SP 391 diffuser

ADVANTAGES

- *Ideal for cooling.*
- *Low speed diffusion.*

DESCRIPTION

- Diffusion surface made of perforated galvanised steel.
- Steel finish, epoxy paint RAL 9010 white
- For use on floor.

FIELD OF APPLICATION

- Low speed air supply.
- Cooling and air conditioning in commercial and industrial buildings.
- 180° air supply.
- Wall-mounted or centrally mounted in occupied area.
- Air distribution ensured by internal deflectors.

ADDITIONAL RANGE

- Paint finish from RAL colour chart (contact us).

ACCESSORIES

- Floor base.
- Silent operation.
- Duct trim.
- Airflow controller and measurement inlet.

AVAILABLE OPTIONS

- Sound attenuator.
- Control device.
- Duct trim.
- Floor base.

DIMENSIONS

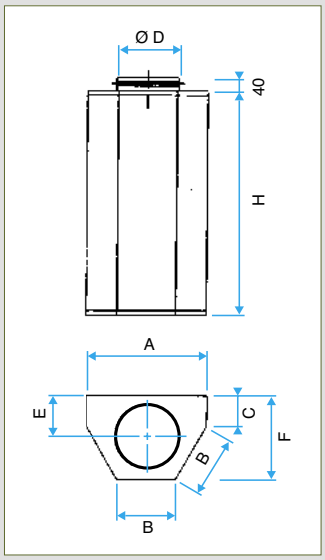

SP 391 diffuser

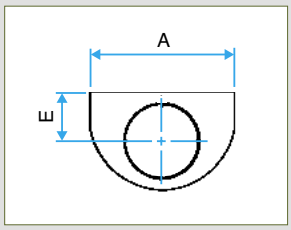

SP 391 R diffuser

Comfort airflow levels for Lw < NR 25 and dimensions									
Model	A (mm)	B (mm)	C (mm)	Ø D (mm)	E (mm)	F (mm)	H (mm)	L** (mm)	Airflow (m^3/h)
100	200	100	70	98	80	155	400	300	175
125	250	125	75	123	93	185	500	300	275
160	300	150	80	168	110	250	700	400	400
200	380	190	90	198	130	260	800	400	600
250	480	240	102	248	155	315	900	500	900
315	600	300	125	313	198	390	1000	600	1500
400	760	380	151	398	230	480	1250	700	2400
500	950	475	179	498	280	600	1500	800	4000
630	950	475	309	628	345	730	1800	900	6000

**L = height of acoustic casing

SP 392 series - steel

SP 392 diffuser

ADVANTAGES

- *Ideal for cooling.*
- *Low speed diffusion.*

DESCRIPTION

- Diffusion surface made of perforated galvanised steel.
- Steel finish, epoxy paint RAL 9010 white
- For use on floor.

FIELD OF APPLICATION

- Low speed air supply.
- Cooling and air conditioning in commercial and industrial buildings.
- 90° air supply.
- Wall-mounted or centrally mounted in occupied area.
- Air distribution ensured by internal deflectors.

ADDITIONAL RANGE

- Paint finish from RAL colour chart (contact us).

ACCESSORIES

- Floor base.
- Silent operation.
- Duct trim.
- Airflow controller and measurement inlet.

AVAILABLE OPTIONS

- Sound attenuator.
- Control device.
- Duct trim.
- Floor base.

DIMENSIONS

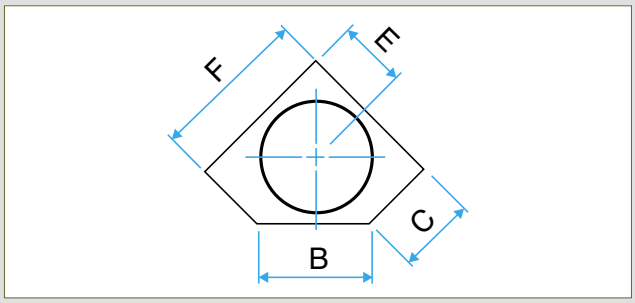

SP 392 diffuser

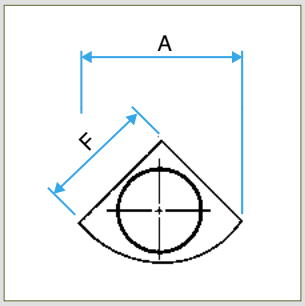

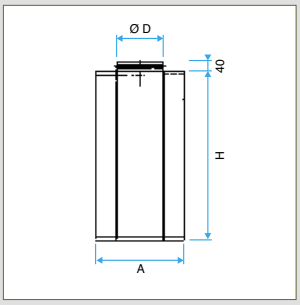

SP 392 R diffuser

Comfort airflow levels for Lw < NR 25 and dimensions									
Dimensions (mm)	A (mm)	B (mm)	C (mm)	Ø D (mm)	E (mm)	F (mm)	H (mm)	L** (mm)	Airflow (m^3/h)
100	240	126	81	98	70	170	400	300	100
125	286	151	96	123	85	203	500	300	175
160	341	181	114	158	100	242	700	400	350
200	406	216	135	198	120	288	800	400	450
250	480	252	162	248	145	340	900	500	700
315	609	320	206	313	185	432	1000	600	1100
400	740	389	250	398	230	525	1250	700	1700
500	902	474	305	498	280	640	1500	800	2500
**L = height of acoustic casing									

SP 393 series - steel

SP 393 diffusers

ADVANTAGES

- *Ideal for cooling.*
- *Low speed diffusion.*

DESCRIPTION

- Diffusion surface made of perforated galvanised steel.
- Steel finish, epoxy paint RAL 9010 white
- For use on floor.

FIELD OF APPLICATION

- Low speed air supply.
- Cooling and air conditioning in commercial and industrial buildings.
- 180° air supply.
- Wall-mounted.
- Air distribution ensured by internal deflectors.

ADDITIONAL RANGE

- Paint finish from RAL colour chart (contact us).

ACCESSORIES

- Floor base.
- Silent operation.
- Duct trim.
- Airflow controller and measurement inlet.

AVAILABLE OPTIONS

- Sound attenuator.
- Control device.
- Duct trim.
- Floor base.

DIMENSIONS

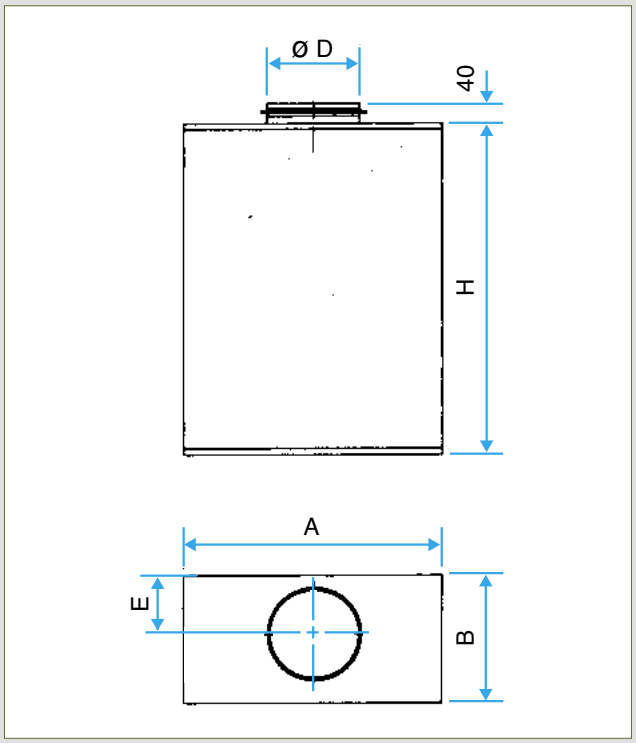

SP 393 diffuser

Comfort airflow for Lw < NR 25 and dimensions						
Dimensions (mm)	A (mm)	B (mm)	Ø D (mm)	H (mm)	L** (mm)	Airflow (m^3/h)
100	350	155	98	400	300	100
125	400	180	123	500	300	160
160	500	250	158	700	400	240
200	600	300	198	800	400	400
250	700	350	248	900	500	700
315	850	425	313	1000	600	1000
400	1000	500	398	1250	700	1500
500	1200	600	498	1500	800	2400

**L = height of acoustic casing

SP 394 series - steel

SP 394 diffusers

ADVANTAGES

- *Ideal for cooling.*
- *Low speed diffusion.*

DESCRIPTION

- Diffusion surface made of perforated galvanised steel.
- Steel finish, epoxy paint RAL 9010 white
- For use on floor.

FIELD OF APPLICATION

- Low speed air supply.
- Cooling and air conditioning in commercial and industrial buildings.
- 360° air supply.
- Wall-mounted or centrally mounted in occupied area.
- Air distribution ensured by internal deflectors.

ADDITIONAL RANGE

- Paint finish from RAL colour chart (contact us).

ACCESSORIES

- Floor base.
- Silent operation.
- Duct trim.
- Airflow controller and measurement inlet.

AVAILABLE OPTIONS

- Sound attenuator.
- Control device.
- Duct trim.
- Floor base.

DIMENSIONS

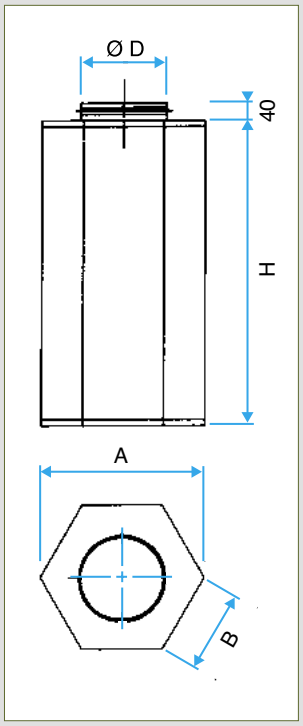

SP 394 diffuser

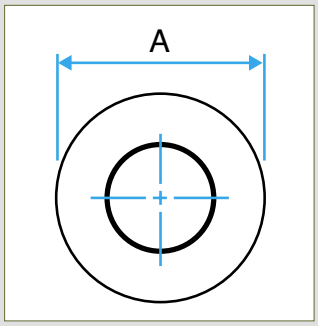

SP 394 R diffuser

Comfort airflow for Lw < NR 25 and dimensions						
Dimensions (mm)	A (mm)	B (mm)	Ø D (mm)	H (mm)	L** (mm)	Airflow (m^3/h)
315	600	300	313	1000	600	1500
400	760	380	398	1250	700	2900
500	950	475	498	1500	800	4000
630	950	475	628	1800	900	6000
**L = height of acoustic casing						

AR 190 series - aluminium

AR 190 jet diffuser

ADVANTAGES

- *Ideal for de-stratification of air layers in high-ceiling areas*
- *Adjustable air jet direction.*
- *Aesthetic design.*
- *Non-apparent fixing.*

RANGE

Dimensions	References	Discount family
AR 190 jet diffuser		
Type 80	11003026	***10***
Type 110	11003027	***10***
Type 150	11003028	***10***
Type 200	11003029	***10***
Type 230	11003030	***10***
AR 190 C jet diffuser		
Ø 160 (type 80)	11003016	***10***
Ø 200 (type 110)	11003017	***10***
Ø 315 (type 150)	11003018	***10***
Ø 400 (type 200)	11003019	***10***
Ø 400 (type 230)	11003020	***10***

DESCRIPTION

- Aluminium finish with natural anodised hue or epoxy white paint - RAL 9010 85%.
- AR 190 : fixing on rectangular duct or plenum with scews.
- AR 190 C : delivered with circular mounting sleeve for direct connection on circular ducts.

FIELD OF APPLICATION

- Air supply for high-ceiling buildings such as airports.
- Long-range diffusion to provide airflow to occupied areas, ideal for avoiding stratification of air in heating applications.
- Can be inclined to 30°.
- Wall or ceiling mounted.

ADDITIONAL RANGE

- Paint finish from RAL colour chart (contact us).

ACCESSORIES

- AR 190 C delivered with circular mounting sleeve.
- Connection sleeve for rigid circular ducts (contact us).

DIMENSIONS

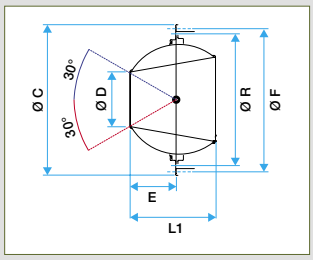

AR 190 jet diffuser.

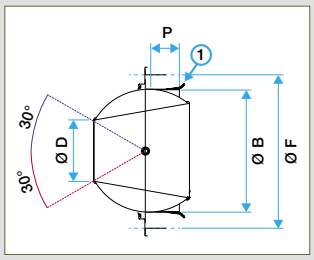

AR 190 C jet diffuser for circular duct connection.

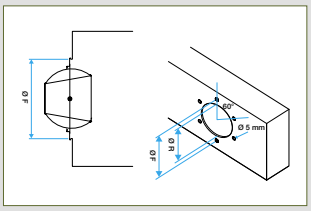

AR 190 mounted on rectangular duct.

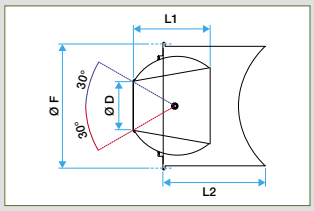

Mounting on circular duct with special sleeve.

Comfort airflow for Lw < NR 40 and dimensions											
Model	**Ø (mm)**	**L1 (mm)**	**E (mm)**	**Ø B (mm)**	**Ø C (mm)**	**Ø D (mm)**	**P (mm)**	**Ø F (mm)**	**Ø R (mm)**	**L2 (mm)**
80	160	118	52	158	245	80	50	226	2035	200
110	200	140	82	198	285	110	50	266	250	300
150	300	220	128	313	385	150	50	366	352	300
200	400	275	172	398	485	200	50	466	452	350
230	400	265	130	398	485	230	50	466	452	350

SELECTION SOFTWARE

KOANDA 3D is the new selection software which ensures the selection of the most suitable air diffusion products, ensuring a good compromise between thermal comfort, acoustics, aesthetics and less pressure drop. Selector Koanda 3D has a very intuitive and intuitive interface, which makes its use very pleasant and easy.

AR 190 Thermo series - aluminium

AR 190 Thermo jet diffuser

ADVANTAGES

- *Ideal for de-stratification of air layers in high-ceiling areas*
- *Adjustable air jet direction.*
- *Aesthetic design.*

RANGE

Dimensions	References	Discount family
AR 190 Thermo jet diffuser - anodised aluminium		
150	11051264	***10***
200	11051265	***10***
230	11051266	***10***
AR 190 Thermo jet diffuser - white aluminium		
150	11051267	***10***
200	11051268	***10***
230	11051269	***10***

DESCRIPTION

- Aluminium finish with natural anodised hue or epoxy white paint - RAL 9010 85%.
- Heat-sensitive spring made of nickel-titanium alloy to automatically toggle the diffusion angle according to the temperature of the blown air:
- «winter» position (heating) for de-stratification of hot air.
- «summer» position (cooling) for perfect management of air speeds in the occupied areas.
- «Winter» and «summer» diffusion angles adjustable on installation using screws (max. +/- 30°)
- Fixed in place using invisible screws on rectangular duct (or plenum), or direct connection to circular air supply duct.

Note: no damper available for this range.

FIELD OF APPLICATION

- Air supply for high-ceiling buildings such as airports.
- Long-range diffusion to provide airflow to occupied areas, ideal for avoiding stratification of air in heating applications.
- Automatic diffusion orientation according to the temperature of the blown air, for optimum operation both in winter and summer.
- Can be inclined to 30°.
- Wall or ceiling mounted.

ADDITIONAL RANGE

- Manual adjustment version: DGH (see previous pages).

ACCESSORIES

- Face plate to cover screws (supplied).
- Connection sleeve for rectangular ducts (contact us).
- Connection sleeve for rigid circular ducts (contact us).

DIMENSIONS

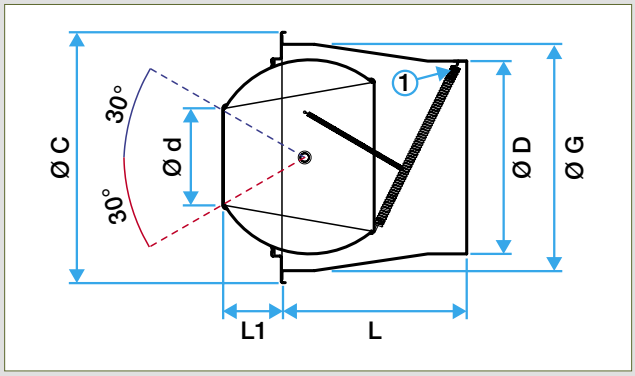

AR 190 Thermo diffuser 1- Heat-sensitive spring

Comfort airflow for Lw < NR 40 and dimensions							
Model (mm)	Ø d (mm)	Ø D (mm)	Ø G (mm)	Ø C (mm)	L1 (mm)	L (mm)	Airflow (m^3/h)
150	150	300	362	380	130	285	750
200	200	400	462	380	167	290	1300
230	230	400	462	380	167	290	1700

SELECTION SOFTWARE

KOANDA 3D is the new selection software which ensures the selection of the most suitable air diffusion products, ensuring a good compromise between thermal comfort, acoustics, aesthetics and less pressure drop. Selector Koanda 3D has a very intuitive and intuitive interface, which makes its use very pleasant and easy.

AVF 75 - ANF 75 - ATO 75 series - aluminium

AVF 75 damper

ATO 75 damper

ADVANTAGES

• Controls pressure inside building.

RANGE

Dimensions	References	Discount family
ATO 75 duct		
600 x 400	11051735	***10***
800 x 400	11051736	***10***
500 x 500	11051737	***10***
800 x 500	11051738	***10***
1000 x 500	11051739	***10***
AVF 75 air inlet		
300 x 200	11051705	***10***
400 x 200	11051706	***10***
300 x 300	11051707	***10***
400 x 400	11051708	***10***
600 x 400	11051709	***10***
800 x 400	11051710	***10***
500 x 500	11051711	***10***
800 x 500	11051712	***10***
1000 x 500	11051713	***10***
AVF 75 air outlet		
300 x 200	11051718	***10***
400 x 200	11051719	***10***
300 x 300	11051720	***10***
400 x 400	11051721	***10***
600 x 400	11051722	***10***
800 x 400	11051723	***10***
500 x 500	11051724	***10***
800 x 500	11051725	***10***
1000 x 500	11051726	***10***

DESCRIPTION

- Extruded aluminium frame, aluminium sheet vanes.
- Frame: anodised aluminium finish, natural satin hue.
- Vanes: rough aluminium finish.
- Visible attachment with screws in frame.

FIELD OF APPLICATION

- Backdraft dampers. Overpressure or negative pressure of buildings in ventilation or air conditioning applications.
- Wall-mounted indoors (AVF 75 - ANF 75).
- Duct-mounted in ductwork (ATO 75).

ADDITIONAL RANGE

- All dimensions up to 1000 x 1000 (contact us for details).
- Version equipped with adjustable counterweight to adjust the opening or closing pressure (contact us).
- Paint finish from RAL colour chart (contact us).

DIMENSIONS

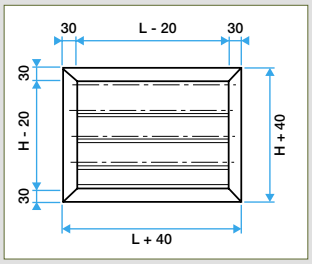

ATO 75 damper

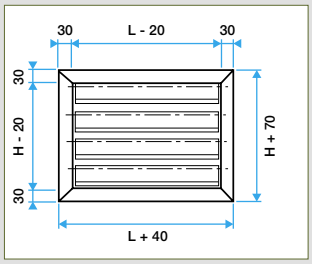

AVF 75 damper

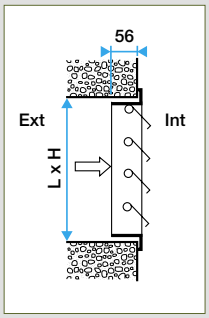

AVF 75 damper
negative pressure

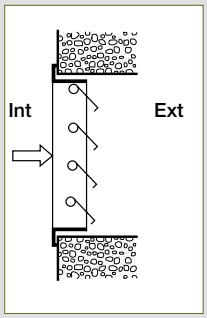

ANF 75 damper
Positive pressure.

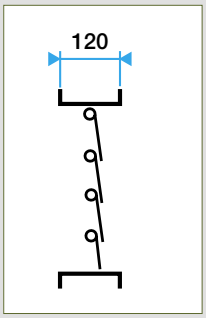

ATO 75 damper
Positive or negative
pressure for duct.

Comfort airflow for Vk < 3 m/s and DP < 25 Pa.	
Dimensions L x H (mm)	**Airflow (m³/h)**
300 x 200	550
400 x 200	700
300 x 300	750
400 x 400	1500
600 x 400	2300
800 x 400	2600
500 x 500	3000
800 x 500	4900
1000 x 500	5600

SELECTION SOFTWARE

KOANDA 3D is the new selection software which ensures the selection of the most suitable air diffusion products, ensuring a good compromise between thermal comfort, acoustics, aesthetics and less pressure drop. Selector Koanda 3D has a very intuitive and intuitive interface, which makes its use very pleasant and easy.

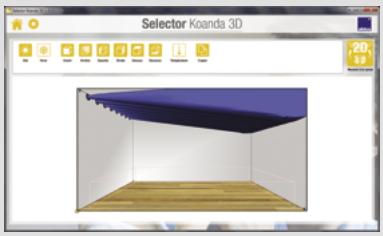

AWA 251 series - aluminium

AWA 251 terminal

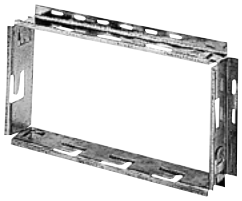

Mounting frame F4

ADVANTAGES

- *Light terminal suited to ventilation airflow.*
- *Available in stock in most standard dimensions.*

DESCRIPTION

- Extruded aluminium frame with extruded aluminium horizontal rain-guard vanes.
- 25 mm spacing between vanes.
- Interior section with diamond mesh 10 X 30 protective screen, Ø 0.8 mm.
- Anodised aluminium finish, natural satin hue.
- Visible attachment with screws in frame.

FIELD OF APPLICATION

- Fresh air inlet or exhaust air discharge.
- Wall-mounted.

ADDITIONAL RANGE

- Paint finish from RAL colour chart (contact us).
- All dimensions available up to 1200 x 1000 (contact us for details).

SELECTION SOFTWARE

KOANDA 3D is the new selection software which ensures the selection of the most suitable air diffusion products, ensuring a good compromise between thermal comfort, acoustics, aesthetics and less pressure drop. Selector Koanda 3D has a very intuitive and intuitive interface, which makes its use very pleasant and easy.

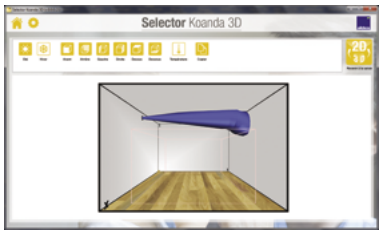

RANGE

H	References	Discount family
L200		
200	11052032	***10***
L250		
250	11052090	***10***
L300		
150	11052028	***10***
300	11052039	***10***
200	11052033	***10***
L350		
350	11052135	***10***
L400		
200	11052034	***10***

H	References	Discount family
300	11052040	***10***
400	11052045	***10***
L450		
450	11052154	***10***
L500		
200	11052035	***10***
300	11052041	***10***
400	11052046	***10***
500	11052052	***10***
L600		
300	11052042	***10***
400	11052047	***10***

H	References	Discount family
500	11052064	***10***
600	11052167	***10***
L700		
500	11052065	***10***
700	11052173	***10***
L800		
400	11052049	***10***
500	11052066	***10***
800	11052179	***10***
L1000		
500	11052068	***10***

F4 - MT F3 series - steel

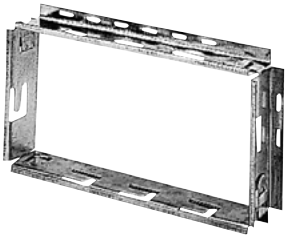

F4 mounting frame

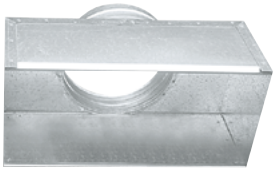

MT F3 box

ADVANTAGES

• Facilitates installation of AWA 251 terminals.

RANGE (WITH CHOICE OF OPTIONS)

Désignation	References
Mounting frame F4	11003001
Connection box MT F3	11053703

DESCRIPTION

• F4: mounting frame made of galvanised steel, for sealing into wall. Supplied as 4 individual elements for assembly on site. Screw-fixed terminal.
• MT F3: galvanised steel connection box. Screw-fixed terminal.
Note: use of the connection box is incompatible with F4 mounting frame.
• Dimensions range from 200 x 75 to 1200 x 1200 mm with increments of 25 mm in width & height.

FIELD OF APPLICATION

• Mounting frame suited to AWA 251 type outdoor terminals.
• Connection box with rear branch connection to adapt to circular ductwork.

DETAILS

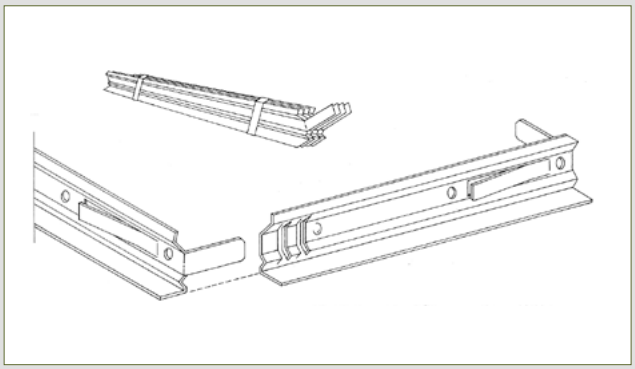

F4 mounting frame

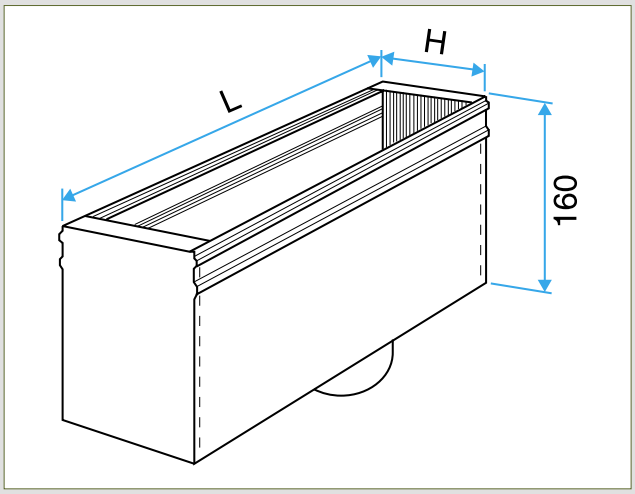

MT F3 box

Small reinforced outdoor terminals

AG 638 series - aluminium

AG 638 terminal

ADVANTAGES

- *Installed directly without mounting frame.*
- *Possible to install in a specific mounting frame without drilling into masonry.*

RANGE

Dimensions	References	Discount family
STANDARD		
200 x 200	11052011	***10***
300 x 300	11052012	***10***
400 x 400	11052013	***10***
500 x 500	11052014	***10***
600 x 600	11052015	***10***
WITH CHOICE OF OPTIONS		
AG638	11003254	***10***
Mounting frame	11003259	***10***

- Lengths 200 mm to 1200 mm in 100 mm increments.
- Heights 200 to 1200 mm in 100 mm increments.
- Epoxy paint finish according to RAL chart (optional).

DESCRIPTION

- Extruded aluminium frame with extruded aluminium horizontal rain-guard vanes.
- 40 mm spacing between vanes.
- Interior section with square mesh 12 X 12 protective screen, Ø 1.2 mm galvanised steel.
- Anodised aluminium finish, natural satin hue.
- Installed directly into masonry or with specific mounting frame. The mounting frame and terminal are supplied pre-drilled on front side.

FIELD OF APPLICATION

- Fresh air inlet or exhaust air discharge.
- Wall-mounted outdoors.
- Rain guard function.

ACCESSORIES

- F10 mounting frame made of galvanised steel, equipped with sealing brackets. Designed to receive terminal fastening screws which prevents drilling into wall for installation. Screws supplied with F10 mounting frame.
- Connection box with rear branch connection (see previous page).

AVAILABLE CHOICE OF OPTIONS

Designation
F1: directly attached to wall, held in place by screws in the pre-drilled outer frame.
F2: directly attached to wall using sealing brackets.
CC: Suitable for use with F10 mounting frame (pre-drilled outer frame). Supplied without mounting frame.
CCM: supplied with fitted F10 mounting frame (screws supplied).
Stainless steel protective screen. / Galvanised steel anti-insect screen.
RAL paint group 1
RAL paint group 2
RAL paint group 3

DIMENSIONS

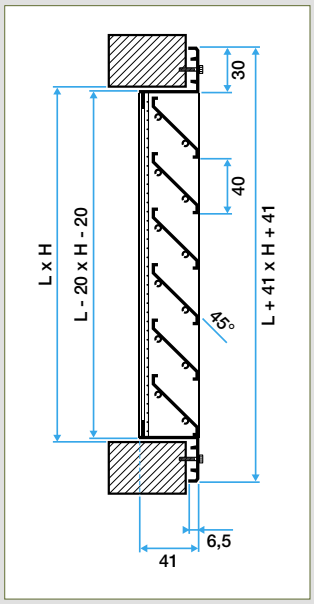

AG 638 terminal - installed without mounting frame

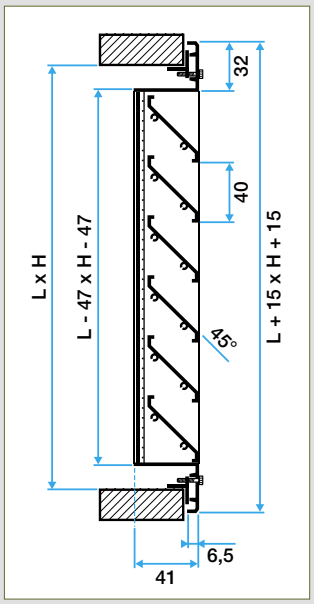

AG 638 terminal - installed with F10 mounting frame

Selection table at the end of chapter.

SELECTION SOFTWARE

KOANDA 3D is the new selection software which ensures the selection of the most suitable air diffusion products, ensuring a good compromise between thermal comfort, acoustics, aesthetics and less pressure drop. Selector Koanda 3D has a very intuitive and intuitive interface, which makes its use very pleasant and easy.

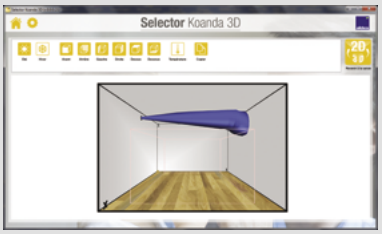

AG 639 - aluminium

AG 639 - AG 639 terminal

Mounting frame F10

ADVANTAGES

• Large dimensions adapted to air conditioning or car park airflow requirements.
• Robust construction.
• Specially-designed anti-intrusion terminals.

RANGE (WITH CHOICE OF OPTIONS)

Designation	References	Discount family
AG 639	11003255	***10***
Mounting frame F10 for AG 639	11003259	***10***

DESCRIPTION

• AG 639: extruded aluminium frame with extruded aluminium horizontal rain-guard vanes.
• 75 mm spacing between vanes
• Interior section with square mesh 12 X 12 protective screen, Ø 1.2 mm galvanised steel.
• AG 639: rough aluminium finish.
• Visible screw attachment in frame and F11 mounting frame.

FIELD OF APPLICATION

• Fresh air inlet or exhaust air discharge.
• Wall-mounted.
• Rain guard function.

ADDITIONAL RANGE

• Lengths from 200 mm to 2000 mm in increments of 100 mm.
• Heights from 200 to 2000 mm in increments of 100 mm.
• All intermediate dimensions available in increments of 10 mm.
• Very large dimension terminals delivered in kit form.
• Finish from RAL chart.

ACCESSORIES

• F11 mounting frame made of galvanised steel, equipped with sealing brackets. For large-dimension terminals supplied in kit form, use F13 attachment method (brackets on rear of terminal).

AVAILABLE CHOICE OF OPTIONS

Designation
F1: directly attached to wall, held in place by screws in the pre-drilled outer frame.
F2: directly attached to wall using sealing brackets.
CC: Suitable for use with F10 mounting frame (pre-drilled outer frame). Supplied without mounting frame.
CCM: supplied with fitted F10 mounting frame (screws supplied).
Stainless steel protective screen. / Galvanised steel anti-insect screen.
RAL paint group 1
RAL paint group 2
RAL paint group 3

DIMENSIONS

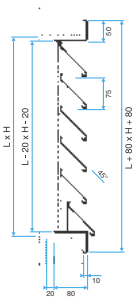

AG 639 terminal

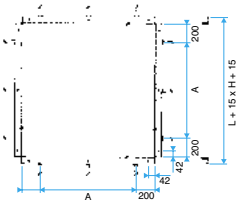

F11 mounting frame

Selection table at the end of chapter.

SELECTION SOFTWARE

KOANDA 3D is the new selection software which ensures the selection of the most suitable air diffusion products, ensuring a good compromise between thermal comfort, acoustics, aesthetics and less pressure drop. Selector Koanda 3D has a very intuitive and intuitive interface, which makes its use very pleasant and easy.

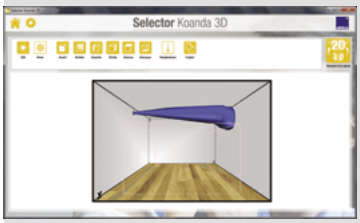

AG 645 series - aluminium

AG 645 terminal

Grille AG 645 with manual control

ADVANTAGES

- *Movable blades (or vanes) enabling total closure of terminal.*
- *Manual or motorised controls.*

RANGE (WITH CHOICE OF OPTIONS)

Designation	References	Discount family
AG 645	11002483	***10***

*Motor delivered assembled: specify position (left or right of terminal).

DESCRIPTION

- Extruded aluminium frame with extruded aluminium horizontal rain-guard vanes.
- Vane spacing 100 mm, mobile and coupled using outer rod used to totally close the terminal.
- Manual control using handle or motorised.
- Interior section with protective square 12 X 12 mesh screen, Ø 1.2 mm galvanised steel.
- Rough aluminium finish.
- Installed using F11-645 mounting frame. Frame pre-drilled on request (F1 attachment).

FIELD OF APPLICATION

- Fresh air inlet or exhaust air discharge.
- Possible to enable closure.
- Wall-mounted.

ADDITIONAL RANGE

- Lengths 200 mm to 1600 mm in 25 mm increments.
- Heights 200 to 2000 mm in 100 mm increments.
- Finish according to RAL chart (contact us).
- Version with U-shaped frame - width 38 mm.

ACCESSORIES

- F11-645 mounting frame made of galvanised steel, equipped with sealing brackets (on demand).
- Control handle.
- On/Off or proportional motor.

AVAILABLE CHOICE OF OPTIONS

Designation
F1: visible attachment with screws
Galvanised anti-insect screen
Stainless steel anti-insect screen
Manual control lever
On/Off 230 V motor fitted
On/Off 24 V motor fitted
Proportional 24 V motor fitted

DIMENSIONS

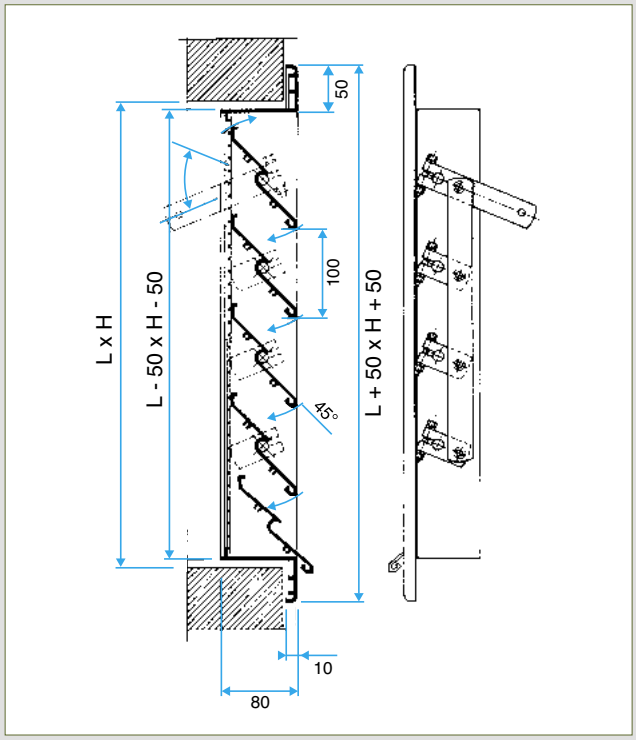

AG 645 terminal with manual control

Selection table at the end of chapter.

SELECTION SOFTWARE

KOANDA 3D is the new selection software which ensures the selection of the most suitable air diffusion products, ensuring a good compromise between thermal comfort, acoustics, aesthetics and less pressure drop. Selector Koanda 3D has a very intuitive and intuitive interface, which makes its use very pleasant and easy.

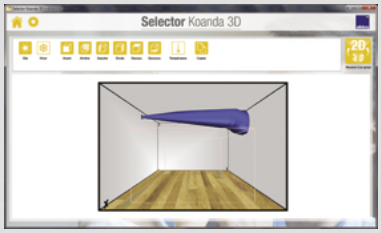

AP 639 series - aluminium

Edicule de toiture AP 639

AP 639 penthouse

ADVANTAGES

• Root terminals suited to natural smoke exhaust airflow.

RANGE (WITH CHOICE OF OPTIONS)

Designation	References
AP 639 H 300	11003240
AP 639 H 400	11003241
AP 639 H 500	11003242
AP 639 H 600	11003243
AP 639 H 800	11003244
RF 639 stack base	11003249

• Dimensions up to 600 x 600 mm and height 800 mm.
For other dimensions contact us for more details.
• Anodised aluminium or optional epoxy RAL chart paint finish.

DESCRIPTION

• Aluminium frame with horizontal rain guard vanes. Aluminium sheet cover.
• 100 mm spacing between vanes
• Interior section with square mesh 12 X 12 protective screen, Ø 1.2 mm galvanised steel.
• Rough aluminium finish.
• Fixed to frame using visible screws. Use 2 lifting rings supplied to install on roof.
• Positioned on concrete base.

FIELD OF APPLICATION

• Fresh air inlet or exhaust air discharge.
• Installation on roof.
• Robust terminals.
• Ideal for fresh air inlet for commercial smoke exhaust applications or for discharge in residential smoke evacuation applications (see Smoke exhaust chapter).

ACCESSORIES

• Stainless steel protective screens.
• Galvanised steel stack base for flat roof, epoxy paint RAL 9006 grey.
• Divider plate to separate simultaneous air intake and discharge airflows.

AVAILABLE CHOICE OF OPTIONS

Designation
Separation plate for two distinct ventilation circuits
Stainless steel protective screen
Extruded aluminium finish
Epoxy paint from RAL colour chart

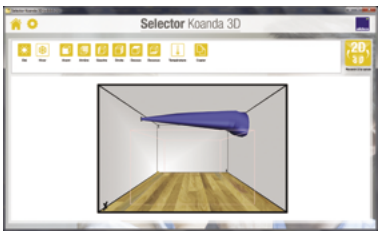

DIMENSIONS

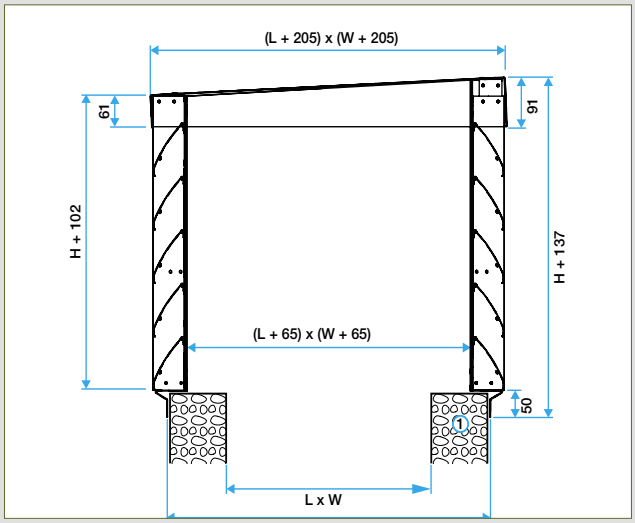

AP 639 penthouse on concrete base

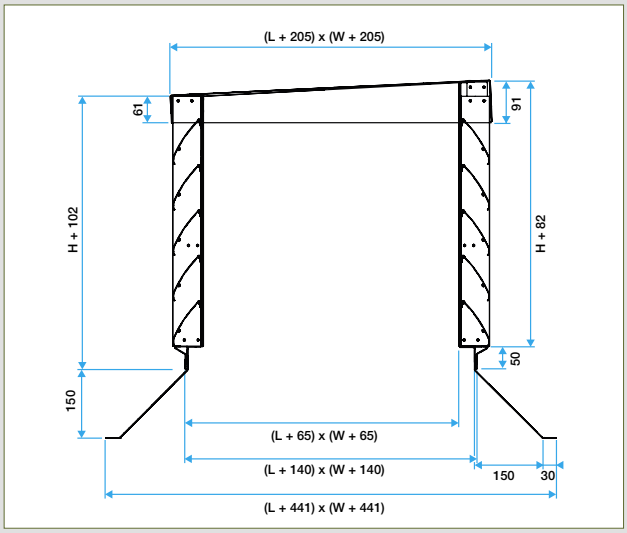

AP 639 penthouse with metal stack base for flat roof

Selection table at the end of chapter.

Outdoor circular terminals

AR 637 series - aluminium

AR 637 terminal up to Ø 315 mm

AR 637 terminal beyond Ø 400 mm

ADVANTAGES

- *Circular connection*
- *Ideal for ventilation airflows*

RANGE

Dimensions	References	Discount family
Range with choice of options		
125	11002505	***10***
160	11002506	***10***
200	11002507	***10***
250	11002508	***10***
315	11002509	***10***
Range standard (stock)		
125	11052240	***10***
160	11052241	***10***
200	11052242	***10***
250	11052243	***10***
315	11052244	***10***
400	11052260	***10***
450	11052261	***10***
500	11052262	***10***
560	11052263	***10***
630	11052264	***10***

DESCRIPTION

Diameters from 125 to 315 mm:

- Rain guard vanes, spaced every 20 mm.
- Aluminium construction.
- Anodised aluminium finish, natural satin hue
- Concealed attachment using screws in internal collar.

Diameters from 400 to 630 mm:

- Rain guard vanes, spaced every 50 mm.
- Aluminium construction.
- Rough aluminium finish.
- Visible attachment with screws in frame.
- Interior section with protective square 12 X 12 mesh anti-bird screen, Ø 1.2 mm galvanised steel.

FIELD OF APPLICATION

- Outdoor circular terminal for air intake or fan unit exhaust.

ADDITIONAL RANGE

- All diameters up to 1250 mm (contact us).
- On request, galvanised steel anti-insect screen for small diameters.
- Paint finish from RAL colour chart (contact us).

SELECTION SOFTWARE

KOANDA 3D is the new selection software which ensures the selection of the most suitable air diffusion products, ensuring a good compromise between thermal comfort, acoustics, aesthetics and less pressure drop. Selector Koanda 3D has a very intuitive and intuitive interface, which makes its use very pleasant and easy.

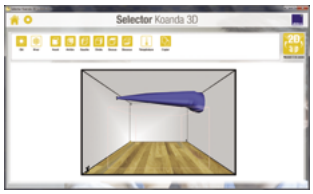

DIMENSIONS

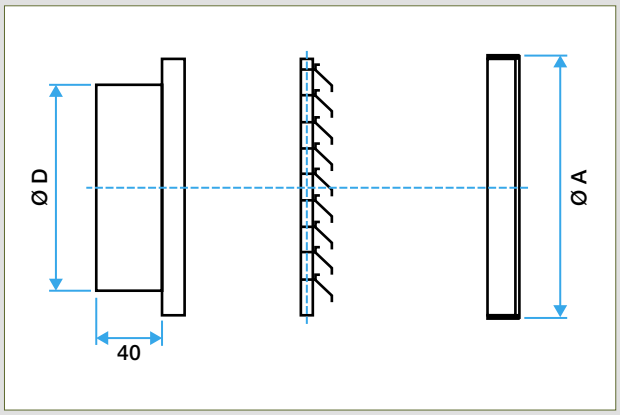

AR 637 terminal from Ø 125 to Ø 315

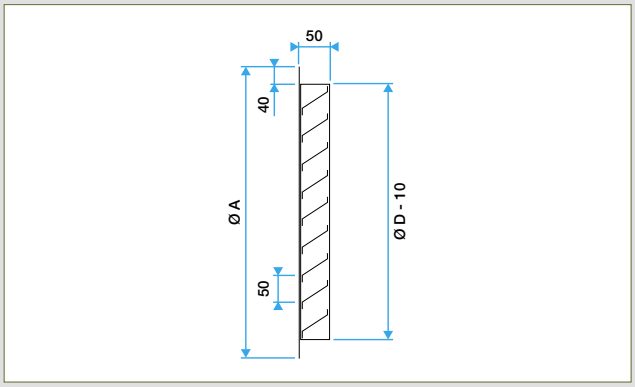

AR 637 terminal from Ø 400 to Ø 630

See selection table at tne end of chapter.

Comfort airflow levels for Lw < NR 35 and DP < 45 Pa.		
Ø N (mm)	Ø A (mm)	Airflow (m^3/h)
125	160	150
160	200	200
200	250	300
250	315	500
315	400	800
400	450	1400
450	500	1750
500	630	2280
630	680	3560

Air diffusion

Selection Tables

AC 101 - AC 102 Series

SELECTION - AIR SUPPLY WITH CEILING EFFECT

Ak (m^2)	L x H (mm)		qv (m^3/h) 150		200		300		400		500		700		900		1200		1500		3000		5000	
0.0074	200 x 75		22	5.8	27	7.5																	Lw	Lt
			5.9	25	7,5	40																	Vk	Pa
0.0110	300 x 75		–	4.1	19	5.5	28	8.2																
	200 x 100		3.8	10	5.0	18	7.6	40																
0.0160	400 x 75	200 x 150	–	3.4	–	4.5	21	6.8	28	9.1														
	300 x 100		2.6	5	3.5	8	5.2	19	6.9	34														
0.0240	600 x 75	300 x 150			–	3.7	–	5.6	20	7.4	25	9.3												
	400 x 100	200 x 200			2.3	4	34.5	8	4.6	15	5.8	23												
0.0300	800 x 75						–	5.0	16	6.0	21	8.3	29	12										
	500 x 100						2.8	5	3.7	10	4.6	15	6.5	29										
0.0400	1000 x 75	400 x 150							–	5.7	–	7.2	23	10	29	13								
	600 x 100	300 x 200							2.8	5	3.5	8	4.9	17	6.2	27								
0.0490	1200 x 75	500 x 150							–	5.2	–	6.5	19	9.1	25	12	32	16						
	800 x 100	400 x 200							2.3	4	2.8	6	4.0	11	5.1	18	6.8	32						
0.0600	1000 x 100	500 x 200									–	5.9	15	8.2	21	11	22	14	34	18				
	600 x 150	300 x 300									2.3	4	3.2	7	4.2	12	5.5	22	6.9	34				
0.0780	1200 x 100	600 x 200											–	7.2	16	9.2	23	12	29	15				
	800 x 150	400 x 300											2.5	4	3.2	7	4.3	13	5.3	20				
0.1050	1000 x 150	500 x 300													–	8.0	17	11	23	13				
	800 x 200	400 x 400													2.4	4	3.2	7	4.0	11				
0.1320	1200 x 150	600 x 300															–	9.5	18	12	35	27		
	1000 x 200	500 x 400															2.5	4	3.2	7	6.3	30		
0.1600	1200 x 200	600 x 400															–	9.5	15	12.5	31	24		
	800 x 300	500 x 500															2.1	3.0	2.6	5.0	5.1	18		
0.2100	1000 x 300	600 x 500																	–	11	26	15	38	–
	800 x 400																		2.0	2.8	4.0	11	6.9	32
0.2800	1200 x 300	800 x 500																	–	9.0	20	18	33	30
	1000 x 400																		–	–	3.0	6	5.0	17
0.3500	1200 x 400																				15	16.5	27	27
	1000 x 500																				2.4	4.1	4.0	11
0.4200	1200 x 500		Lw	Lt																	–	15	24	25
			Vk	Pa																	2.0	2.8	3.3	7.5

The Lw (db(A)) values do not take into account any noise attenuation in the room. Vt = 0.37 m/s.
Tests conducted on dual deflection terminals with a "perfect" plenum in compliance with standard EN 12238.

CORRECTIONS FOR OTHER Vt

Vt (m/s)	0.25	0.375	0.5	0.625
Lt (**A**)	x 1.5	x 1	x 0.75	x 0.6
Lt (**B**)	x 1.05	x 0.7	x 0.53	x 0.42

CORRECTIONS FOR DEFLECTION

Vane angle	Lt	Vk	Δpt	Lw
22°	x 0.70	x 1.15	x 1.40	+ 3
45°	x 0.55	x1.25	x 1.80	+ 6

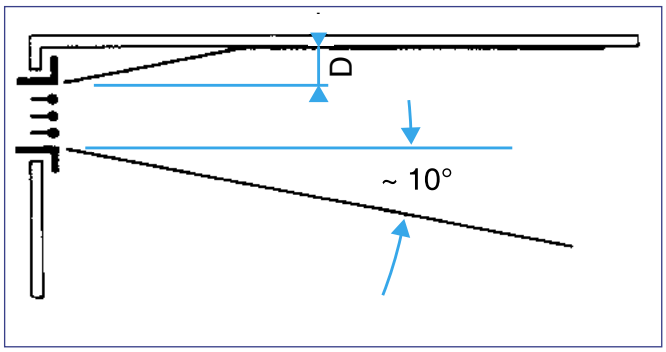

A) Air supply with ceiling effect where D ≤ 30 cm.

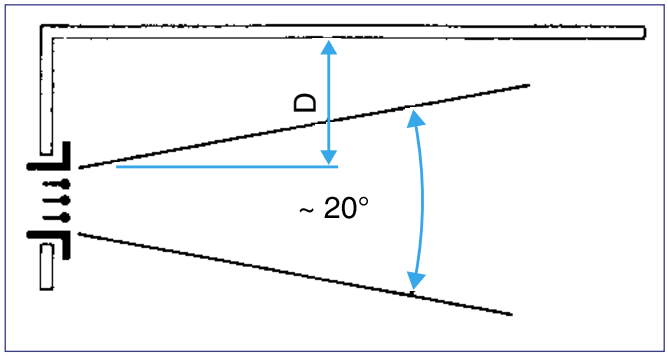

B) Air supply with no ceiling effect where D > 30 cm.

SD 102 - GD 102 Series

SELECTION - AIR SUPPLY WITH CEILING EFFECT

Ak (m^2)	L x H (mm)		qv (m^3/h) 100		150		200		300		400		600		800		1200		1800		2500		3500	
0.011	325 x 75		32	2.8	43	4.1	50	5.5	60	8.3													Lw	Lt
			2.5	16	3.8	35	5.1	62	7.6	140													Vk	Pa
0.015	425 x 75		25	2,4	35	3.6	43	4.7	53	7.1	61	9.5												
			1.9	8.4	2.8	19	3.7	33	5.5	75	7.4	134												
0.019	525 x 75				30	3.2	38	4.2	48	6.3	56	8.4												
					2.2	12	2.9	21	4.4	47	5.8	83												
0.023	625 x 75	325 x 125					33	3.8	44	5.7	52	7.6												
							2.4	14	3.6	32	4.8	47												
0.030	825 x 75	425 x 125							38	5.0	46	6.7	56	10										
									2.8	19	3.7	33	5.1	75										
0.037	1025 x 75	525 x 125							34	4.5	41	6.0	52	9.0	59	12								
	325 x 175								2.2	15	3.0	22	4.5	49	6.0	88								
0.045	1225 x 75	625 x 125									37	5.5	47	8.2	55	11	59	14						
	425 x 175	325 x 225									2.5	15	3.7	33	4.9	59	5.5	75						
0.060	825 x 125	525 x 175											41	7.1	49	9.5	54	13						
	425 x 225												2.8	19	3.7	33	4.4	47						
0.075	1025 x 125	625 x 175											36	6.4	44	8.5	51	13						
	525 x 225												2.2	12	3.0	22	3.7	35						
0.090	1225 x 125	825 x 175													41	8.6	44	11	61	20				
	625 x 225														2.5	15	2.8	20	5.8	80				
0.120	1025 x 175	825 x 225															40	10	55	17				
																	2.3	12.5	4.2	42				
0.150	1225 x 175	1025 x 225																	50	15	58	21		
																			3.3	28	4.5	50		
0.180	1225 x 225		Lw	Lt															47	14	54	17	62	26
			Vk	Pa															2.8	21	3.8	35	5.5	80

Corrections for damperless terminals

ΔPt	Lw
x 0.5	– 4

The Lw (db(A)) values do not take into account any noise attenuation in the room. Vt = 0.37 m/s.
Tests conducted on dual deflection terminals with a "perfect" plenum in compliance with standard EN 12238.

CORRECTIONS FOR OTHER Vt

Vt (m/s)	0.25	0.375	0.5	0.625
Lt (**A**)	x 1	x 0.67	x 0.5	x 0.4
Lt (**B**)	x 0.7	x 0.47	x 0.35	x 0.28

CORRECTIONS FOR DEFLECTION

Vane angle	Lt	Vk	ΔPT	Lw
22°	x 0.77	x 1.15	x 1.30	+ 3
45°	x 0.55	x1.25	x 1.60	+ 6

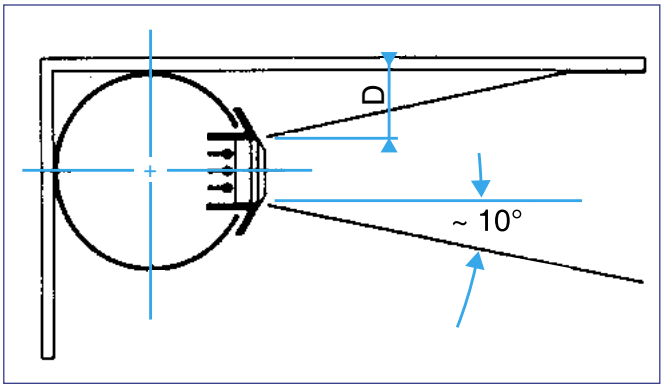

A) Air supply with ceiling effect where D ≤ 30 cm.

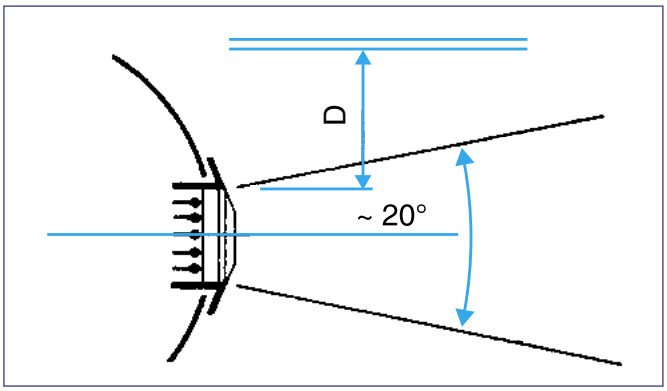

B) Air supply with no ceiling effect where D > 30 cm.

Air diffusion

Selection Tables

Gridlined Wall and Wall D - Floor

SELECTION - AIR SUPPLY WITH CEILING EFFECT - LENGTH 1 METRE

Ak (m²)	Hauteur (mm)	Débit (m³/h)	300	400	500	600	800	1000	1500	2000	2500	3000	3500	4000
0,036	75	Lw (dB(A))	20	30	37	43								
		ΔP (Pa)	4,6	9,4	16,4	25,9								
		Lt (m)	5	6,7	8,4	10,1								
0,056	100	Lw (dB(A))			23	29	38	45						
		ΔP (Pa)			2,9	4,6	9,4	16,4						
		Lt (m)			6,7	8,1	10,7	13,4						
0,084	150	Lw (dB(A))					24	30	42					
		ΔP (Pa)					3,4	5,9	16,4					
		Lt (m)					8,8	11	16,4					
0,123	200	Lw (dB(A))						17	27	35	40	45		
		ΔP (Pa)						1,6	4,3	8,8	15,4	24,3		
		Lt (m)						9,1	13,6	18,1	22,7	27,2		
0,158	250	Lw (dB(A))							17	24	30	34	38	41
		ΔP (Pa)							2,1	4,2	7,4	11,6	17,1	23,9
		Lt (m)							12	16	20	24	28	32
0,195	300	Lw (dB(A))							9	16	21	25	29	32
		ΔP (Pa)							1,1	2,2	3,9	6,1	9	12,6
		Lt (m)							10,8	14,4	18	21,6	25,2	28,8
0,232	350	Lw (dB(A))								9	14	18	21	24
		ΔP (Pa)								1,3	2,3	3,7	5,4	7,5
		Lt (m)								13,2	16,5	19,8	23,1	26,4
0,27	400	Lw (dB(A))								5	8	11	15	17
		ΔP (Pa)								0,8	1,5	2,3	3,4	4,8
		Lt (m)								12,2	15,3	18,4	21,4	24,5
0,315	500	Lw (dB(A))									5	5	8	11
		ΔP (Pa)									1,3	2,1	3,1	4,3
		Lt (m)									14,2	17	19,8	22,7
0,387	600	Lw (dB(A))										5	5	5
		ΔP (Pa)										1,1	1,7	2,3
		Lt (m)										15,3	17,9	20,4
0,536	800	Lw (dB(A))												5
		ΔP (Pa)												0,9
		Lt (m)												17,4

The Lw (db (A)) values do not take into account any noise attenuation in the room. Vt = 0.37 m/s. Tests conducted with a "perfect" plenum in compliance with standard EN 12238. Vk (m/s) = [airflow (m³/h) / 3600] / Ak (m²). Heights not available in Gridlined Wall D version. Heights not available for Gridlined Floor.

CORRECTIONS FOR OTHER Vt

Vt (m/s)	0.25	0.375	0.5	0.625
Lt (**A**)	x 1.5	x 1	x 0.75	x 0.6
Lt (**B**)	x 1.05	x 0.7	x 0.53	x 0.42

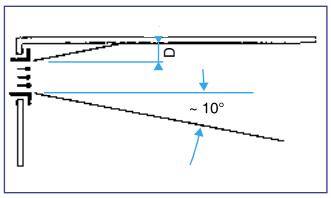

A) Air supply with ceiling effect where D ≤ 30 cm.

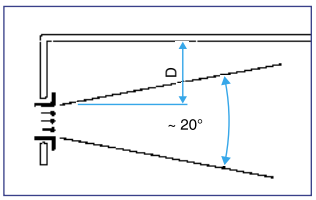

B) Air supply with no ceiling effect where D > 30 cm.

CORRECTIONS FOR DEFLECTION (TYPE D)

Vane angle	Lt	Ak	ΔP	Lw
22°	x 0.70	x 0.96	x 1.40	+ 3
45°	x 0.55	x 0.8	x 1.80	+ 6

CORRECTIONS FOR DAMPER

Damper 100 % open	Damper 50 % open	Damper 25 % open
ΔP + 0	ΔP + 0.95 x Vk²	ΔP + 3.28 x Vk²
Lw + 0	Lw + 10	Lw + 20

KOCT CORRECTIONS (DB) BY OCTAVE BAND

Frequency (Hz)	100	125	160	200	250	315	400	500	630	800	1000	1250	1600	2000	2500	3150	4000	5000	6300	8000	10000
K oct (dB)	6	5	5	4	5	5	4	2	0	-2	-5	-8	-13	-16	-19	-20	-20	-19	-20	-18	-17

Add K oct to the table value to obtain the sound power level in dB.

Gridlined Wall and Wall D - Floor

SELECTION - EXHAUST - LENGTH 1 METRE

Ak (m²)	Hauteur (mm)	Débit (m³/h)	300	400	500	600	800	1000	1500	2000	2500	3000	3500	4000
0,034	75	Lw (dB(A))	32	39	45									
		ΔP (Pa)	5,1	9,9	16,5									
0,052	100	Lw (dB(A))		26	32	37								
		ΔP (Pa)		3,1	5,1	7,8								
0,079	150	Lw (dB(A))		13	20	25	34	40						
		ΔP (Pa)		1,2	1,9	2,9	5,7	9,5						
0,121	200	Lw (dB(A))		5	7	13	22	29	43					
		ΔP (Pa)		0,4	0,6	0,9	1,8	2,9	7,5					
0,157	250	Lw (dB(A))			5	5	15	22	36					
		ΔP (Pa)			0,3	0,5	0,9	1,5	3,9					
0,195	300	Lw (dB(A))				5	9	17	31	41				
		ΔP (Pa)				0,3	0,5	0,9	2,3	4,4				
0,232	350	Lw (dB(A))				5	5	12	27	37	45			
		ΔP (Pa)				0,2	0,3	0,6	1,5	2,9	4,8			
0,27	400	Lw (dB(A))					5	8	23	34	42			
		ΔP (Pa)					0,2	0,4	1	2	3,3			
0,32	500	Lw (dB(A))						5	19	30	39	46		
		ΔP (Pa)						0,3	0,7	1,4	2,4	3,6		
0,396	600	Lw (dB(A))							14	25	34	41	48	
		ΔP (Pa)							0,4	0,8	1,4	2,1	3	
0,553	800	Lw (dB(A))							6	18	27	35	41	47
		ΔP (Pa)							0,2	0,4	0,6	0,9	1,3	1,8

TThe Lw (db (A)) values do not take into account any noise attenuation in the room. Tests conducted with a "perfect" plenum in compliance with standard EN 12238.
Vk (m/s) = [airflow (m³/h) / 3600] / Ak (m²). ☐ Heights not available in Gridlined Wall D version. ☐ Heights not available for Gridlined Floor.

CORRECTIONS FOR DAMPER

Damper 100 % open	Damper 50 % open	Damper 25 % open
ΔP + 0	ΔP + 0.95 x Vk²	ΔP + 3.28 x Vk²
Lw + 0	Lw + 10	Lw + 20

KOCT CORRECTIONS (DB) BY OCTAVE BAND

Frequency (Hz)	100	125	160	200	250	315	400	500	630	800	1000	1250	1600	2000	2500	3150	4000	5000	6300	8000	10000
K oct (dB)	1	-1	0	1	-1	0	3	-2	-2	-3	-7	-8	-12	-14	-16	-18	-19	-20	-22	-23	-22

Add K oct to the table value to obtain the sound power level in dB.

Gridlined Exhaust

SELECTION - EXHAUST - LENGTH 1 METRE

Ak (m²)	L x H (mm)	Débit (m³/h)	100	150	200	300	400	500	600	800	1000	1500	2000	2500
0,0360	75	Lw (dB(A))	14	25	33	44	52	58	63	71				
		DP (Pa)	2,3	4,9	8,4	18,1	31,1	47,5	67,1	115,7				
0,0443	100	Lw (dB(A))	10	21	29	40	48	54	59	67				
		DP (Pa)	1,6	3,5	6	12,9	22,2	33,9	47,9	82,6				
0,0784	150	Lw (dB(A))	0	9	17	27	35	41	46	53	59	70		
		DP (Pa)	0,5	1,1	1,9	4,1	7,1	10,9	15,4	26,5	40,4	87,1		
0,1045	200	Lw (dB(A))	0	0	11	21	29	35	39	47	53	63	71	
		DP (Pa)	0,3	0,6	1,1	2,4	4,1	6,3	8,9	15,4	23,5	50,6	87,2	
0,1270	250	Lw (dB(A))	0	0	7	17	25	30	35	43	48	59	66	72
		DP (Pa)	0,2	0,4	0,8	1,7	2,9	4,4	6,2	10,6	16,2	35	60,3	91,9
0,1567	300	Lw (dB(A))	0	0	0	13	20	26	30	38	44	54	61	67
		DP (Pa)	0,1	0,3	0,5	1,1	1,9	2,9	4,1	7,1	10,9	23,5	40,5	61,8
0,1820	350	Lw (dB(A))	0	0	0	9	17	22	27	34	40	51	58	64
		DP (Pa)	0,1	0,2	0,4	0,8	1,4	2,2	3,1	5,4	8,2	17,7	30,5	46,5
0,2103	400	Lw (dB(A))		0	0	6	14	19	24	31	37	47	55	60
		DP (Pa)		0,2	0,3	0,6	1,1	1,7	2,4	4,1	6,2	13,5	23,2	35,4
0,2380	450	Lw (dB(A))			0	0	11	17	21	28	34	44	52	57
		DP (Pa)			0,2	0,5	0,9	1,3	1,9	3,2	4,9	10,6	18,4	28
0,2660	500	Lw (dB(A))				0	9	14	19	26	32	42	49	55
		DP (Pa)				0,4	0,7	1,1	1,5	2,6	4	8,6	14,9	22,7
0,3060	570	Lw (dB(A))					6	11	16	23	28	39	46	51
		DP (Pa)					0,5	0,8	1,2	2	3,1	6,6	11,4	17,4
0,3230	600	Lw (dB(A))					0	10	14	22	27	37	45	50
		DP (Pa)					0,5	0,7	1,1	1,8	2,8	6	10,3	15,7
0,3510	650	Lw (dB(A))					0	8	13	20	25	35	43	48
		DP (Pa)					0,4	0,6	0,9	1,6	2,4	5,1	8,8	13,4
0,3800	700	Lw (dB(A))					0	6	11	18	24	34	41	46
		DP (Pa)					0,4	0,5	0,8	1,3	2	4,4	7,6	11,5
0,4090	750	Lw (dB(A))					0	5	9	16	22	32	39	45
		DP (Pa)					0,3	0,5	0,7	1,2	1,8	3,8	6,6	10
0,4320	800	Lw (dB(A))							8	15	21	31	38	43
		DP (Pa)							0,6	1	1,6	3,5	5,9	9,1

The Lw (db (A)) values do not take into account any noise attenuation in the room. Tests conducted with a "perfect" plenum in compliance with standard EN 12238. Vk (m/s) = [airflow (m³/h) / 3600] / Ak (m²).

CORRECTIONS FOR DAMPER

Damper 100% open	Damper 50 % open	Damper 25 % open
ΔP + 0	ΔP + 0.95 x Vk²	ΔP + 3.28 x Vk²
Lw + 0	Lw + 10	Lw + 20

KOCT CORRECTIONS (DB) BY OCTAVE BAND

Frequency (Hz)	100	125	160	200	250	315	400	500	630	800	1000	1250	1600	2000	2500	3150	4000	5000	6300	8000	10000
K oct (dB)	-5	-6	-6	-3	-2	-2	0	1	2	0	-2	-3	-5	-7	-8	-10	-12	-13	-17	-21	-23

Add K oct to the table value to obtain the sound power level in dB.

Série AC 101 - SC 101 - AC 121 - SC 121 - AC 123 - SC 125 AC 161- AC 163 - AO 123 - AU 124 - AO 251 - SC 370

SELECTION - EXHAUST

Ak (m²)	L x H (mm)		qv (m³/h) 200		300		400		500		750		1,000		1,500		2,000		3,000		4,000		5,000	
0.013	200 x 100		22	–																			Lw	
			4.2	12																			Vk	Pa
0.020	300 x 100		13	–	24	–																		
	200 x 150		2.8	5	4.2	12																		
0.030	400 x 100	200 x 200	–	–	16		23	–																
	300 x 150		1.9	2	2.9	6	3.7	10																
0.045	600 x 100	300 x 200			–	–	15	–	20	5	–													
	400 x 150				1.9	2	2.5	4	3.1	7														
0.060	800 x 100	400 x 200							14	–	24	–												
	500 x 150								2.3	4	3.5	8												
0.075	1,000x 100	500 x 200							–	–	19	–	27	–										
	600 x 150	300 x 300							1.8	2	2.7	5	3.8	10										
0.093	1,200x 100	600 x 200									15	–	23	–	32	–								
	800 x 150	400 x 300									2.2	4	3.0	6	4.5	14								
0.125	1,000x 150	500 x 300									–	–	11	–	26	1	–							
	800 x 200	400 x 400									1.6	2	2.2	4	3.4	8								
0.150	1,200x 150												–	–	22	–	29	4	–					
	600 x 300												1.8	2	2.7	5	3.7	9						
0.175	1,000x 200												–	–	18	–	26	1	–					
	500 x 400												1.6	2	2.4	4	3.2	7						
0.200	1,200x 200	600 x 400													16	–	23	–	33	–				
	800 x 300	500 x 500													2.1	3	2.8	5	4.1	12				
0.260	1,000x 300														–	–	18	–	28	–	34	–		
	800 x 400	600 x 500													1.6	2	2.2	4	3.2	7	4.1	12		
0.350	1,000x 400																		25	–	32	–		
	800 x 500																		2.8	5	3.7	9		
0.420	1,200x 400																		18	–	25	–	31	–
	1,000x 400																		2.0	3	2.6	5	3.3	8
0.530	1,200x 500		Lw																12	–	20	–	26	–
			Vk	Pa															1.6	2	2.1	3	3.3	5

The Lw (dB(A)) values do not take into account any noise attenuation in the room. Tests conducted on single deflection terminals with a "perfect" plenum in compliance with standard EN 12238

Série GD 102

SELECTION - EXHAUST

Ak (m²)	L x H (mm)		qv (m³/h) 100		150		200		300		400		600		800		1,200		1,800		2,500		3,500	
0.014	325 x 75		25	–	35	45	30	–															Lw	–
			2	4	3	18	4	31															Vk	Pa
0.019	425 x 75				–	–	–	–	53	–														
					2.3	12	3	18	4.8	40														
0.023	525 x 75						35	–	50	–	56	–												
							2.5	12	3.8	30	5	49												
0.028	625 x 75	325 x 125					–	–	45	–	52	–												
							2	8	3	18	4	32												
0.037	825 x 75	425 x 125							35	–	47	3	72											
									2.3	12	3	18	4.9	45										
0.046	1,025x 75	525 x 125							–	–	35	–	51	–	54	–								
	325 x 175								1.8	6	2.5	12	3.6	25	5	49								
0.055	1,225x 75	625 x 125									–	–	28	–	35	–								
	425 x 175	325 x 225									2	8	3	18	4	32								
0.074	825 x 125	525 x 175											35	–	49	–	59	–						
	425 x 225												2.3	10	3	18	4.6	42						
0.092	1,025x 125	625 x 175											–	–	45	–	54	–						
	525 x 225												1.8	5	2.5	12	3.5	24						
0.110	1,225x 125	825 x 175													–	–	48	–	61	–				
	625 x 225														2	8	3	18	4.2	37				
0.138	1,025x 175	825 x 225															47	–	57	–	65	–		
																	2.4	10	3.7	27	5	49		
0.166	1,225x 175	1,025x 225																	52	–	60	–		
																			3	18	4	31		
0.220	1,225x 225		Lw	–															48	–	55	–	62	–
			Vk	Pa															2.3	10	3.2	20	4.2	37

Corrections for grill without damper	
ΔPt	Lw
x 0.45	– 6

The Lw (dB(A)) values do not take into account any noise attenuation in the room. Tests conducted on single deflection terminals with a "perfect" plenum in compliance with standard EN 12238

Air diffusion

Selection Tables

Série AC 181

SELECTION - TRANSFER

Ak (m²)	L x H (mm)		qv (m³/h) 50		100		150		200		300		400		600		800		1,000		1,500		2,000	
0.016	300 x 100	200 x 150	–	–	28	–																	Lw	–
			0.9	3.5	1.7	14																	Vk	Pa
0.027	500 x 100	300 x 150	–	–	19	–	28	–																
	200 x 200		0.6	1.6	1.0	4.0	1.5	9.9																
0.040	800 x 100	400 x 150			–	–	21	–	28	–														
	300 x 200				0.7	2.3	1.0	4.0	1.3	8.0														
0.056	1,000x 100	500 x 150			–	–	–	–	23	–	30		36											
	400 x 200				0.5	1.1	0.7	2.5	1.0	4.5	1.5	10	2.0	18										
0.070	1,200x 100	800 x 150			–	–	–	–	–	–	27		32											
	500 x 200	300 x 300			0.3	1.0	0.6	1.6	0.8	3	1.2	6.5	1.6	11										
0.081	800 x 150	600 x 200					–	–	–	–	25	–	31	–	40	–								
	400 x 300						0.5	1.6	0.7	2.3	1.0	4.0	1.3	8.0	2.1	20								
0.120	1,200x 150	800 x 200							–	–	–		25		32		38							
	500 x 300	400 x 400							0.5	1.4	0.7	2	0.9	4	1.4	9	1.9	15						
0.150	1,000x 200	600 x 300									–	–	–	–	29	–	35	–	40	–				
	500 x 400										0.57	1.6	0.6	2.0	1.1	5.0	1.5	9.8	1.9	15				
0.190	1,200x 200	800 x 300											–		25		30		35					
	600 x 400	500 x 500											0.6	1.5	0.9	3.5	1.1	6.0	1.5	10				
0.260	1,200x 300	800 x 400													18	–	26	–	31	–	39	–		
	600 x 500														0.63	1.8	0.8	3.1	1.0	4.1	1.6	11		
0.320	1,000x 400	800 x 500	Lw	–													23	–	27	–	35	–	41	–
	600 x 600		Vk	Pa													0.7	2.3	0.8	3.1	1.2	5.9	1.7	13

The Lw (dB(A)) values do not take into account any noise attenuation in the room

Série SC 831 - SC 832 TP

SELECTION - AIR SUPPLY WITH CEILING EFFECT

CORRECTIONS FOR OTHER Vt

Vt (m/s)	0.25	0.375	0.5	0.625
Lt	x 1	x 0.67	x 0.5	x 0.4

Ak (m²)	Ø N (mm)	qv (m³/h) 150		200		300		400		500		600		800		1,000		1,200		1,400	
0.011	160	–	1.1	33	1.5	47	2.2													Lw	Lt
		3.8	8	5	15	7.5	35													Vk	Pa
0.020	200	–	0.8	–	1.1	30	1.7	39	2.2	47	2.8										
		2.2	4	2.8	5	4.1	12	5.5	20	7	30										
0.031	250					–	1.3	25	3.7	33	2.1	39	2.5	50	3..5						
						2.6	5	3.5	2	4.5	13	5.5	26	7.5	50						
0.046	300							–	1.4	–	1.7	27	2.1	37	2.7	45	3.5	51	4.1		
								2.5	4	3	6	3.7	14	5.0	22	6.2	35	7.5	50		
0.066	355	Lw	Lt							–	1.5	25	1.6	35	2.4	42	3	45	3.8	55	4.8
		Vk	Pa							2.2	4	3.5	7	4.8	12	6	20	7	28	10.2	39.2

The Lw (dB(A)) values do not take into account any noise attenuation in the room. Vt = 0.37 m/s. Tests conducted with a "perfect" plenum in compliance with standard EN 12238

Série SC 310 R - SC 360 R

SELECTION - 4-DIRECTION DIFFUSION WITH CEILING EFFECT

Ak (m²)	L x H (mm)	Ø D (mm)	qv (m³/h) 125		150		200		250		300		400		600		800		1,000	
0.018	300 x 300	160	–	0.8	–	1.0	26	1.3	33	1.7	39	2.0							Lw	Lt
			1.9	3.2	2.3	4.6	3.1	8.1	3.9	13	4.6	18							Vk	Pa
0.034	400 x 400	200					–	1.0	–	1.2	24	1.5	32	2.0						
							1.6	2.7	2.0	4.3	2.5	6.2	3.3	11						
0.056	500 x 500	250									–	1.2	–	1.5	32	2.3	42	3.8		
											1.5	2.3	2.0	4.0	3.0	9.1	4.0	16		
0.080	562 x 562	315	Lw	Lt									–	1.3	21	1.9	30	2.5	37	3.2
			Vk	Pa									1.4	1.7	2.1	3.9	2.8	6.9	3.5	11

The Lw (dB(A)) values do not take into account any noise attenuation in the room. Vt = 0.5 m/s. Tests conducted with a "perfect" plenum in compliance with standard EN 12238

Air diffusion

Selection Tables

Série A 842 - A 842 TP

SELECTION - AIR SUPPLY WITH CEILING EFFECT

Ak (m²)	Ø D (mm)	qv (m³/h) 200		250		300		400		500		600		800		1,000		1,250		1,500		1,750		2,000		2,600	
0.015	160	30	1.4	35	1.7	41	2.1	50	2.8																	Lw	Lt
		3.7	14	4.4	20	5.6	33	7.2	54																	Vk	Pa
0.027	200			23	1.3	28	1.5	35	2.1	41	2.6	47	3.2														
				2.5	6.6	3	10	4	17	5	26	6	38														
0.040	250					20	1.3	27	1.7	32	2.1	38	2.6	46	3.5	55	4.5										
						2	4.2	2.7	7.7	3.4	12	4	17	5.6	33	7	52										
0.056	315							20	1.5	25	1.8	30	2.2	39	3	45	3.7	52	4.6								
								2	4.2	2.4	6	3	10	4	17	5	26	6.2	40								
0.074	355											25	1.9	30	2.6	39	3.3	47	4.1	52	5						
												2.3	5	3	9	3.8	16	4.8	23	5.5	32						
0.090	400													25	2.3	33	3.0	40	3.8	46	4.5						
														2.5	6.5	3	9	3.8	16	4.6	22						
0.013	500																	29	3.0	34	3.6	39	4.3	43	4.9	50	6
																		2.6	6.9	3.1	10	3.6	14	4.1	19	5	29
0.019	630	Lw	Lt																			30	3.5	35	4.1	42	5.1
		Vk	Pa																			2.6	6.9	2.9	8	3.6	14

The Lw (dB(A)) values do not take into account any noise attenuation in the room. Vt = 0.37 m/s. Tests conducted with a "perfect" plenum in compliance with standard EN 12238

Série SF 704 - SN 704 TP

SELECTION - AIR SUPPLY WITH CEILING EFFECT FOR 704 SERIES

Ak (m²)	L x H (mm)	qv (m³/h) 100		150		200		250		300		400		500		600		800		1000		1200		1500	
0.011	150 x 150	25	0.7	34	1.0	39	1.4																	Lw	Lt
		2.8	4.6	4.2	10	5.6	19																	Vk	Pa
0.023	225 x 225			22	0.8	28	1.0	33	1.2	37	1.5	42	2.0												
				2.1	2.6	2.8	4.6	3.5	7.2	4.2	10	5.6	19												
0.038	300 x 300							23	0.9	32	1.1	28	1.5	37	1.8	41	2.3								
								1.9	2.2	2.3	3.2	3.1	5.7	3.9	9.0	4.6	13								
0.057	375 x 375											21	1.2	30	1.5	34	1.8	40	2.4	45	3.0				
												1.9	2.4	2.5	3.7	2.9	5.3	3.9	9.4	5.0	15				
0.087	472 x 472															28	1.5	34	2.0	38	2.4	42	3.0	47	3.7
																2.1	2.5	2.8	4.5	3.4	5.9	4.2	10	5.1	15
0.106	525 x 525																	29	1.7	33	2.1	37	2.6	42	3.2
																		2.0	2.4	2.5	3.8	3.1	5.5	3.8	8.6
0.137	600 x 600	Lw	Lt															25	1.5	29	1.8	33	2.2	37	2.7
		Vk	Pa															1.5	1	2	2.4	2.5	3.8	3	5.4

The Lw (dB(A)) values do not take into account any noise attenuation in the room. Vt = 0.5 m/s. Tests conducted with a "perfect" plenum in compliance with standard EN 12238

Série SF 704 R TP

SELECTION - AIR SUPPLY WITH CEILING EFFECT FOR 704 R TP SERIES

Ak (m²)	Ø N (mm)	qv (m³/h) 150		200		250		300		400		500		600		800		1000		1200		1500	
0.022	Ø 160	23	1	29	1.2	34	1.4	40	1.7	44	2.2											Lw	Lt
		2.1	4	2.9	7	3.7	13.2	4.2	16	5.6	22											Vk	Pa
0.034	Ø 200					24	1.2	29	1.5	34	1.7	39	2.1	46	3								
						2.1	5	2.5	5.4	3.4	6.8	4.2	15	5	19								
0.054	Ø 250									27	1.5	33	1.8	35	2.2	43	2.8	51	3.4				
										2.3	5	2.8	7	3.5	12	4.5	17	5.6	22				
0.085	Ø 315	Lw	Lt											30	1.7	33	2.2	40	2.6	44	3.3	49	4.1
		Vk	Pa											2.1	4.5	2.8	6.1	3.4	12	4.2	15	5.1	20

The Lw (dB(A)) values do not take into account any noise attenuation in the room. Vt = 0.5 m/s. Tests conducted with a "perfect" plenum in compliance with standard EN 12238

Air diffusion

Selection Tables

Série ALD 610 K

SELECTION - AIR SUPPLY WITH CEILING EFFECT

Ak (m²)	Dimensions	qv (m³/h) 150		200		250		300		400		500		600		800		1,000		1,200		1,400	
0.016	600-1 slot	23	2.3	30	2.7	35	3	38	3.4	43	4											Lw	Lt
		2.4	5	3.3	9	4	13	4.9	20	6.5	35											Vk	Pa
0.018	675-1 slot	21	2	28	2.6	33	2.9	37	3.3	43	3.9	48	4.6										
		2.3	4	2.9	7	3.8	12	4.5	17	6	30	7.5	46										
0.030	600-2 slots					25	2.5	29	2.9	34	3.4	40	3.9	43	4.5	49	5.4						
						2.3	4	2.7	6	3.6	11	4.5	17	5.5	25	7.1	42						
0.034	675-2 slots					23	2.6	27	2.8	32	3.3	38	3.8	41	4.2	47	5.2						
						2	3	2.4	5	3.2	8	4	13	4.9	19	6.5	35						
0.045	600-3 slots									27	2.9	32	3.4	35	3.8	41	4.6	46	5.4	50	6.3		
										2.3	4	2.9	7	3.4	9	4.6	17	5.9	29	6.9	39		
0.051	675-3 slots									25	2.8	30	3.3	33	3.7	40	4.4	44	5.2	48	6		
										2	3	2.6	5	3	7	4	13	5.1	22	6.2	33		
0.060	600-4 slots											27	3.1	31	3.5	37	4.2	42	5	46	5.7	49	6.6
												2.2	4	2.6	5	3.5	10	4.5	16	5.2	22	6.2	31
0.068	675-4 slots	Lw	Lt											28	3.4	34	4	40	4.7	43	5.4	47	6.2
		Vk	Pa											2.4	4	3	7	3.9	12	4.6	17	5.5	25

The Lw (dB(A)) values do not take into account any noise attenuation in the room. Vt = 0.37 m/s. Tests conducted with standard plenum

Série ALD 610 K

SELECTION - EXHAUST WITHOUT FILTER

Ak (m²)	Dimensions	qv (m³/h) 150		200		250		300		400		500		600		800		1,000		1,200		1,400	
0.012	600-1 slot	18	-	25	-	30	-	33	-	39	-											Lw	-
		3.1	8	4.3	15	5.2	22	6.4	50	8.5	59											Vk	Pa
0.014	675-1 slot	16	-	23	-	28	-	32	-	38	-												
		3.0	7	3.8	12	4.9	20	5.9	29	7.8	47												
0.023	600-2 slots					20	-	24	-	29	-	35	-	38	-								
						3.0	7	3.5	10	4.7	17	5.9	29	7.2	43								
0.026	675-2 slots					18	-	22	-	27	-	33	-	36	-	42	-						
						2.6	5	3.1	8	4.2	14	5.2	22	6.4	32	8.4	59						
0.035	600-3 slots									22	-	27	-	30	-	36	-	41	-				
										3.0	7	3.8	12	4.4	15	6.0	29	7.7	49				
0.039	675-3 slots									20	-	25	-	28	-	35	-	39	-	43	-		
										2.6	5	3.4	8	3.9	12	5.2	22	6.6	37	8.1	56		
0.046	600-4 slots											22	-	26	-	32	-	37	-	41	-	44	-
												2.9	7	3.4	8	4.6	17	5.9	27	6.8	37	8.1	53
0.052	675-4 slots	Lw	-											23	-	29	-	35	-	38	-	32	-
		Vk	Pa											3.1	7	3.9	12	5.1	20	6.0	29	7.2	43

The Lw (dB(A)) values do not take into account any noise attenuation in the room. Tests conducted with standard plenum

Série ALD 610 K

SELECTION - EXHAUST WITH G2 FILTER

Ak (m²)	Dimensions	qv (m³/h) 150		200		250		300		400		500		600		800		1,000		1,200		1,400	
0.012	600-1 slot	18	-	25	-	30	-	33	-	39	-											Lw	-
		3.1	8	4.3	15	5.2	23	6.4	52	8.5	63											Vk	Pa
0.014	675-1 slot	16	-	23	-	28	-	32	-	38	-												
		3.0	7	3.8	12	4.9	21	5.9	31	7.8	55												
0.023	600-2 slots					20	-	24	-	29	-	35	-	38	-								
						3.0	8	3.5	12	4.7	23	5.9	34	7.2	50								
0.026	675-2 slots					18	-	22	-	27	-	33	-	36	-	42	-						
						2.6	6	3.1	10	4.2	18	5.2	27	6.4	39	8.4							
0.035	600-3 slots									22	-	27	-	30	-	36	-	41	-				
										3.0	11	3.8	17	4.4	22	6.0	40	7.7	68				
0.039	675-3 slots									20	-	25	-	28	-	35	-	39	-	43	-		
										2.6	9	3.4	13	3.9	19	5.2	33	6.6	56	8.1			
0.046	600-4 slots											22	-	26	-	32	-	37	-	41	-	44	-
												2.9	12	3.4	15	4.6	28	5.9	46	6.8	62	8.1	
0.052	675-4 slots	Lw	-											23	-	29	-	35	-	38	-	32	-
		Vk	Pa											3.1	14	3.9	23	5.1	39	6.0	54	7.2	68

The Lw (dB(A)) values do not take into account any noise attenuation in the room. Tests conducted with standard plenum

Série ALD 610 K Combined

SELECTION - AIR SUPPLY WITH CEILING EFFECT

Ak (m^2)	Dimensions	qv (m^3/h) 150		200		250		300		400		500		600		800		1,000		1,200		1,400	
0.016	600-1 slot	25	2.3	32	2.7	37	3	39	3.4	46	4											Lw	Lt
		2.4	5	3.3	9	4	13	4.9	20	6.5	35											Vk	Pa*
0.018	675-1 slot	22	2	29	2.6	34	2.9	38	3.3	44	3.9	48	4.6										
		2.3	4	2.9	7	3.8	12	4.5	17	6	30	7.5	46										
0.030	600-2 slots					26	2.5	29	2.9	35	3.4	40	3.9	43	4.5	50	5.4						
						2.3	4	2.7	6	3.6	11	4.5	17	5.5	25	7.1	42						
0.034	675-2 slots					24	2.6	27	2.8	33	3.3	39	3.8	42	4.2	48	5.2						
						2	3	2.4	5	3.2	8	4	13	4.9	19	6.5	35						
0.045	600-3 slots									28	2.9	33	3.4	37	3.8	42	4.6	47	5.4	51	6.3		
										2.3	4	2.9	7	3.4	9	4.6	17	5.9	29	6.9	39		
0.051	675-3 slots									26	2.8	31	3.3	34	3.7	41	4.4	46	5.2	49	6		
										2	3	2.6	5	3	7	4	13	5.1	22	6.2	33		
0.060	600-4 slots											28	3.1	32	3.5	38	4.2	43	5	47	5.7	49	6.6
												2.2	4	2.6	5	3.5	10	4.5	16	5.2	22	6.2	31
0.068	675-4 slots	Lw	Lt											29	3.4	36	4	41	4.7	44	5.4	48	6.2
		Vk	Pa*											2.4	4	3	7	3.9	12	4.6	17	5.5	25

The Lw values (dB(A)) do not take into account any noise attenuation in the room and cover the Combined assembly for air supply and exhaust applications.
Vt = 0.37 m/s. Tests conducted with standard plenum. * Pressure drops for Combined assembly in air supply mode

SELECTION - EXHAUST WITHOUT FILTER

Dimensions	qv (m^3/h) 150	200	250	300	400	500	600	800	1,000	1,200	1,400
600-1 slot	1	1	2	3	5						Pa*
675-1 slot	1	1	1	1	3						
600-2 slots			3	4	6	10	14				
675-2 slots			2	2	4	6	9	15			
600-3 slots					9	14	20	36	56		
675-3 slots					4	7	10	18	28	40	
600-4 slots						19	27	49			
675-4 slots	Pa*						13	23	36	52	

Tests conducted with standard plenum. * Pressure drops for Combined assembly in exhaust mode

ΔP > 70 Pa

SELECTION - EXHAUST WITH G2 FILTER

Dimensions	qv (m^3/h) 150	200	250	300	400	500	600	800	1,000	1,200	1,400
600-1 slot	2	2	3	5	8						Pa*
675-1 slot	1	1	2	3	5						
600-2 slots			4	6	10	16	23				
675-2 slots			2	3	6	9	14	24			
600-3 slots					15	23	33	58			
675-3 slots					7	11	17	30	46	66	
600-4 slots						31	45				
675-4 slots	Pa*						20	46	60		

Tests conducted with standard plenum. * Pressure drops for Combined assembly in exhaust mode

ΔP > 70 Pa

LINED - LINED TP - LINED Slim series

SELECTION - AIR SUPPLY FOR 1 M LENGTH WITH CEILING EFFECT

Ak (m²)	Number of slots	Airflow (m³/h)	100	150	200	250	300	400	500	600	800	1000	1200
0.0096	1	Lw (dB (A))	25	32	40	45							
		ΔP (Pa)	9	19	34	52							
		Lt (m)	3	4	5	7							
0.0192	2	Lw (dB (A))		25	25	30	35	42	48				
		ΔP (Pa)		5	9	14	19	34	52				
		Lt (m)		3	4	5	6	7	9				
0.0288	3	Lw (dB (A))				25	26	33	39	44			
		ΔP (Pa)				6	9	15	24	34			
		Lt (m)				4	5	6	8	9			
0.0384	4	Lw (dB (A))					25	27	33	38	45		
		ΔP (Pa)					5	9	14	19	34		
		Lt (m)					4	5	7	8	10		
0.0480	5	Lw (dB (A))						25	28	33	39	46	
		ΔP (Pa)						6	9	12	22	34	
		Lt (m)						5	6	7	9	12	
0.0576	6	Lw (dB (A))							25	29	36	42	47
		ΔP (Pa)							6	9	15	24	34
		Lt (m)							5	6	9	11	13
0.0672	7	Lw (dB (A))							25	25	33	39	43
		ΔP (Pa)							5	7	11	18	25
		Lt (m)							5	6	8	10	12
0.0768	8	Lw (dB (A))								25	30	36	40
		ΔP (Pa)								5	9	14	19
		Lt (m)								6	7	9	11

The Lw (dB(A)) values do not take into account any noise attenuation in the room. Vt = 0.37 m/s. Tests conducted with standard plenum.

SELECTION - EXHAUST INTAKE FOR 1 M LENGTH

Ak (m²)	Number of slots	Airflow (m³/h)	100	150	200	250	300	400	500	600	800	1000	1200
0.0131	1	Lw (dB (A))	25	29	37	43	47						
		ΔP (Pa)	7	15	27	42	60						
		ΔP2 (Pa)	-	-	-	-	-						
0.0262	2	Lw (dB (A))		25	25	27	32	40	45	50			
		ΔP (Pa)		4	7	11	15	27	42	60			
		ΔP2 (Pa)		-	-	-	-	-	-	-			
0.0393	3	Lw (dB (A))				25	25	31	36	41	49		
		ΔP (Pa)				5	7	12	19	27	47		
		ΔP2 (Pa)				10	14	24	38	54	95		
0.0524	4	Lw (dB (A))					25	25	30	35	42	48	
		ΔP (Pa)					4	7	11	15	27	42	
		ΔP2 (Pa)					8	14	21	31	54	84	
0.0655	5	Lw (dB (A))						25	25	30	37	43	48
		ΔP (Pa)						5	7	10	18	27	39
		ΔP2 (Pa)						9	14	20	35	54	77
0.0786	6	Lw (dB (A))							25	26	33	39	44
		ΔP (Pa)							5	7	12	19	27
		ΔP2 (Pa)							10	14	24	38	54
0.0917	7	Lw (dB (A))							25	25	30	36	40
		ΔP (Pa)							4	5	9	14	20
		ΔP2 (Pa)							7	10	18	28	40
0.1048	8	Lw (dB (A))								25	27	33	37
		ΔP (Pa)								4	7	11	15
		ΔP2 (Pa)								8	14	21	31

The Lw (dB(A)) values do not take into account any noise attenuation in the room. ΔP2 = with G3 filter included. Tests conducted with standard plenum.

Série LINED Combined

SELECTION - AIR SUPPLY + EXHAUST FOR 1 M LENGTH WITH CEILING EFFECT

Connection diameter	Number of slots	Airflow (m^3/h)	100	150	200	250	300	400	500	600	800
160	1	Lw (dB(A))	38	49							
		ΔP1 (Pa)	34	74							
		ΔP2 (Pa)	27	60							
		ΔP3 (Pa)	54	121							
		Lt (m)	5.2	7.8							
200	2	Lw (dB(A))	23	34	41	47					
		ΔP1 (Pa)	9	19	34	52					
		ΔP2 (Pa)	7	15	27	42					
		ΔP3 (Pa)	13	30	54	84					
		Lt (m)	3.7	5.5	7.3	9.2					
200	3	Lw (dB(A))		25	32	38	43	50			
		ΔP1 (Pa)		9	15	24	34	59			
		ΔP2 (Pa)		7	12	19	27	47			
		ΔP3 (Pa)		13	24	37	54	96			
		Lt (m)		4.5	6.0	7.5	9.0	12.0			
250	4	Lw (dB(A))		18	25	31	36	43	49		
		ΔP1 (Pa)		5	9	13	19	34	52		
		ΔP2 (Pa)		4	7	11	15	27	42		
		ΔP3 (Pa)		8	13	21	30	54	84		
		Lt (m)		3.9	5.2	6.5	7.8	10.4	13.0		
250	5	Lw (dB(A))			21	26	31	39	44	49	
		ΔP1 (Pa)			6	9	12	22	34	48	
		ΔP2 (Pa)			5	7	10	17	27	39	
		ΔP3 (Pa)			9	13	19	35	54	78	
		Lt (m)			4.6	5.8	7.0	9.3	11.6	13.9	
315	6	Lw (dB(A))				23	26	35	41	46	
		ΔP1 (Pa)				6	9	15	24	34	
		ΔP2 (Pa)				5	7	12	19	27	
		ΔP3 (Pa)				9	13	24	38	54	
		Lt (m)				5.3	6.4	8.5	10.6	12.7	
315	7	Lw (dB(A))				20	25	32	38	43	50
		ΔP1 (Pa)				5	6	11	17	25	44
		ΔP2 (Pa)				4	5	9	14	20	35
		ΔP3 (Pa)				7	10	18	28	40	70
		Lt (m)				4.9	5.9	7.8	9.8	11.8	15.7
315	8	Lw (dB(A))						30	36	41	48
		ΔP1 (Pa)						9	13	19	34
		ΔP2 (Pa)						7	11	15	27
		ΔP3 (Pa)						13	21	30	54
		Lt (m)						7.3	9.2	11.0	14.7

Data valid for a standard diffuser (with central partition, so air supply length = exhaust intake length)
The Lw (dB(A)) values do not take into account any noise attenuation in the room. Vt = 0.37 m/s. Tests conducted with standard plenum
ΔP1 = air supply only ΔP2 = exhaust air only ΔP3 = exhaust with filter

Série AR 190 - AR 190 Thermo

SELECTION - AIR SUPPLY WITHOUT CEILING EFFECT

Ak (m^2)	Diameter (mm)	Airflow (m^3/h)	100	200	300	500	800	1000	1200	1500	2000	2500
0.0179	Ø 150	Lw (dB(A))					39	43	48			
		ΔP (Pa)					81	123	172			
		Lt (m)					12.5	23	28			
0.0308	Ø 200	Lw (dB(A))					26	32	38	41	50	
		ΔP (Pa)					30	45	63	95	162	
		Lt (m)					9.5	11.9	14.2	17.8	23.7	
0.0401	Ø 230	Lw (dB(A))						26	31	37	46	49
		ΔP (Pa)						28	39	59	100	151
		Lt (m)						10.4	12.5	15.6	20.8	26

The Lw (dB(A)) values do not take into account any noise attenuation in the room

Vt = 0.5 m/s

Série Twisted 850

SELECTION - AIR SUPPLY WITH CEILING EFFECT

Ak (m²)	Dimensions	qv (m³/h) 150		200		250		300		350		400		450		500		550		600		650	
0.022	Ø 200	24	0.30	25	0.39	26	0.52	28	0.59	29	0.65	30	0.71	35	0.85	37	0.91	39	0.96	40	1.02	43	1.10
		2.0	2	2.6	3	3.3	4	3.9	6	4.6	8	5.2	11	5.9	13	6.5	17	7.2	20	7.8	24	8.5	28
		Lw	Lt																			Lw	Lt
		Vk	Pa																			Vk	Pa

The Lw (dB(A)) values do not take into account any noise attenuation in the room. Vt = 0.37 m/s. Tests conducted with standard plenum

SELECTION - EXHAUST WITHOUT FILTER

Ak (m²)	Dimensions	qv (m³/h) 150		200		250		300		350		400		450		500		550		600		650	
0.029	Ø 250	24	-	24	-	25	-	26	-	27	-	30	-	33	-	36	-	38	-	41	-	42	-
		1.4	2	1.9	3	2.4	5	2.9	7	4.6	10	3.8	13	4.3	16	4.8	20	5.3	24	5.7	29	6.2	34
	Ø 200 (Pa2)	-	4	-	7	-	11	-	16	-	21	-	28	-	35	-	44	-	53	-	63	-	74
		Lw	-																			Lw	-
		Vk	Pa																			Vk	Pa

The Lw (dB(A)) values do not take into account any noise attenuation in the room. Tests conducted without plenum (direct model ø 250) and with the standard plenum (Pa_2)

SELECTION - EXHAUST - G2 FILTER ONLY

Ak (m²)	Dimensions	qv (m³/h) 150		200		250		300		350		400		450		500		550		600		650	
	Ø 200	-	1	-	2	-	3	-	4	-	6	-	8	-	10	-	12	-	14	-	17	-	20
			Pa																				Pa

Série AR 883 - AR 883 Thermo

SELECTION - COOLING MODE AIR SUPPLY WITH CEILING EFFECT - ΔT - 10 °C AND ANGLE 30°

Ak (m²)	Ø D (mm)	qv (m³/h) 200		300		400		500		600		800		1000		1400		1800		2000		2500	
0.01705	250	25	0.62	35	0.9	42	1.25	47	1.5													Lw	Lt
		3.4	8.1	5.0	16.5	70	30	8.7	44													Vk	Pa
0.03090	315			23	0,7	30	0.87	35	1.15	40	1.35	47	1.8	52	2.3								
				2.7	5.3	8.5	3.5	4.6	15	5.8	21	7.2	33	9.5	53								
0.03810	400							31	1.0	36	1.25	43	1.65	48	2	57	2.8						
								3.6	8.7	4.5	14	6	23	7.5	35	10.5	65						
0.06700	500											31	1.2	37	1.5	43	2.1	51	2.8	53	3.1		
												3.2	7.4	4.0	11	5.7	20	7.5	35	8.1	40		
0.07720	630	Lw	Lt											33	1.4	42	1.9	48	2.5	50	2.7	56	3.5
		Vk	Pa											3.4	8.0	4.8	16	6.3	25	7.0	35	9.0	48

The Lw (dB(A)) values do not take into account any noise attenuation in the room. Vt = 0.25 m/s. Tests conducted with standard plenum

SELECTION - HEATING MODE AIR SUPPLY WITH CEILING EFFECT - ΔT - 10 °C AND ANGLE 90°

Ak (m²)	Ø D (mm)	qv (m³/h) 500		750		1000		1200		1600		2000		3000		4000		5000		6500		8000	
0.03665	250	43	5.9	53	9.0																	Lw	Lt
		3.8	27	5.8	63																	Vk	Pa
0.07355	315			32	4.5	42	6.5	46	7.6	54	10.3												
				2.7	14	3.8	27	4.4	35	6.4	76												
0.10970	400							34	5.2	42	7.3	48	9.0										
								2.9	15.8	4.0	29	5.2	47										
0.16293	500									30	5.1	36	6.3	47	10	55	14						
										2.5	11.4	3.3	19.5	5	45	6.9	86						
0.30157	630	Lw	Lt											30	5.8	42	7.8	42	10	49	12.7	57	16
		Vk	Pa											2.5	11.4	3.5	23	4.6	37	5.8	64	7.3	99

The Lw (dB(A)) values do not take into account any noise attenuation in the room. Vt = 0.25 m/s. Tests conducted with standard plenum

Série SR 861 - SF 861 T

SELECTION - TYPE 861 AIR SUPPLY WITH CEILING EFFECT

Ak (m²)	Ø D (mm)	qv (m³/h) 50		70		100		150		250		350		500		600	
0.0039	125	–	1	31	1.8	38										Lw	Lt
		2.5	4.5	5	17	8.5	45									Vk	Pa
0.0071	160			–	1.4	29	2.3	38	3.2	47	4						
				2.6	5	4.5	13	6.5	26	8.5	45						
0.0124	200					–	19	29	2.9	40	3.6	47	5				
						3.6	9	5.1	17	6.8	28	9	48				
0.0199	250							–	2	32	2.7	40	3.6	47	5	51	6
								2.7	5	3.5	9	4.9	16	6.5	26	8.5	45
0.0358	315	Lw	Lt							–	2.5	31	3.2	38	4.5	42	5.5
		Vk	Pa							3	7	4	11	5.5	20	7	30

The Lw (dB(A)) values do not take into account any noise attenuation in the room. Vt = 0.25 m/s. Tests conducted with standard plenum

CORRECTIONS FOR OTHER Vt

Vt (m/s)	0.25	0.375	0.5	0.625
Lt	x 1	x 0.67	x 0.5	x 0.4

Air diffusion

Selection Tables

Série AWA 251

SELECTION - AIR INLET AND OUTLET

Af (m²)	L x H (mm)	qv (m³/h) 250		500		750		1000		1500		2000		2500		3000		3500		4000		5000		6000		7000		8000	
0.010	200 x 100	38	88																									Lw	Pa1
		7	68																									Vf	Pa2
0.015	300 x 100	25	36	49	156																								
0.017	200 x 150	4.6	30	9.2	120																								
0.020	400 x 100	–	22	39	80																								
	200 x 200	3.5	17	6.9	60																								
0.025	500 x 100	–	14	31	51	47	15																						
	300 x 150	2.8	11	5.5	38	8.3	86																						
0.033	400 x 150	–	10	26	39	42	90																						
	300 x 200	2.4	8	4.6	29	7.1	70																						
0.040	500 x 150			–	22	31	51	43	91																				
	400 x 200			3.5	16	5.3	39	7.1	69																				
0.050	600 x 150 - 500 x 200			–	13	–	34	36	65	49	120																		
	300 x 300			2.7	10	4.3	25	6	50	8.1	90																		
0.070	600 x 200					–	19	28	37	41	68																		
	400 x 300					3.2	14	4.5	28	6.1	51																		
0.080	700 x 200					–	13	–	26	38	55	48	118																
						2.7	18	3.7	20	5.6	43	7.5	89																
0.090	800 x 200 - 500 x 300					25	10	–	20	34	42	44	80	45	125	57	160												
	400 x 400					2.4	8	3.2	15	4.9	33	6.6	60	8.3	94	9.5	130												
0.100	600 x 300							–	16	32	33	41	63	50	98	54	126												
								2.8	12	4.4	26	5.9	47	7.4	73	8.4	102												
0.120	500 x 400							–	10	28	27	38	51	44	80	50	102												
								2.6	8	3.9	21	5.3	38	6.6	59	7.6	83												
0.125	700 x 300									27	24	35	46	43	72	49	93												
										3.7	19	5	35	6.3	55	7.3	76												
0.140	600 x 400									–	16	28	29	35	45	42	65	46	89	51	116								
	800 x 300									3	12	4	22	5	34	5.7	43	6.7	59	7.7	77								
0.150	500 x 500									–	15	27	27	34	42	39	60	44	82	49	107								
										2.9	11	3.8	20	4.8	31	5.5	40	6.4	54	7.3	71								
0.160	700 x 400											26	16	30	25	36	48	41	65	44	85								
												3.4	14	4.3	22	4.9	32	5.7	44	6.5	58								
0.180	600 x 500											26	14	29	22	34	42	39	57	43	74	53	116						
												3.2	12	4	19	4.6	28	5.4	38	6.2	50	7.8	78						
0.190	800 x 400											–	12	28	17	32	32	36	44	42	58	49	91						
												3	11	3.8	15	4.3	21	5	29	5.7	38	7.1	59						
0.210	900 x 400											–	11	–	16	29	26	35	35	39	46	47	72						
	700 x 500											2.8	10	3.5	15	4	19	4.7	26	5.4	34	6.8	53						
0.220	600 x 600											–	10	–	15	30	26	32	30	32	33	39	52						
												2.5	9	3.2	13	3.8	19	4.0	21	4.2	24	5.3	38						
0.240	1000 x 400											–	11	–	15	–	23	32	31	38	41	46	70						
	800 x 500											2.5	9	3.1	12	3.6	17	4.2	23	4.8	30	6,2	50						
0.260	700 x 600											–	9	–	14	–	22	32	30	38	40	46	70						
	600 x 700											2.1	8	2.7	11	3.2	15	3.9	21	4.3	29	5.3	50						
0.270	900 x 500													–	12	–	18	–	25	29	25	35	36						
														2.8	10	3.2	13	3.7	18	3.8	18	4.5	28						
0.295	600 x 800 - 800 x 600													–	11	–	16	–	23	30	28	42	44						
	700 x 700													2.4	10	2.9	11	3.3	16	3.8	20	4.8	31						
0.300	1000 x 500															–	14	–	19	40	46	48	72						
																2.8	10	3.3	14	5.1	34	6.3	53						
0.340	700 x 800 - 800 x 700															–	11	–	16	–	20	40	35	44	45	47	60		
	900 x 600															2.5	8	2.9	11	3.3	15	4.3	25	5	35	5.9	45		
0.360	1000 x 600															–	12	–	14	–	18	36	30	40	40	44	56		
																2.4	9	2.7	10	3.2	14	4	23	4.8	31	5.7	43		
0.390	900 x 700																			–	15	32	22	38	35	43	45		
	800 x 800																			2.9	8	3.5	17	4.4	27	5	35		
0.440	1000 x 700																			–	13	28	20	35	30	39	36	42	50
	900 x 800																			2.6	10	3.4	15	4	23	4.5	28	5.2	39
0.480	1000 x 800	Lw	Pa1																	–	9	–	15	33	23	36	30	38	39
		Vf	Pa2																	2.3	7	2.9	12	3.5	18	4	23	4.6	30

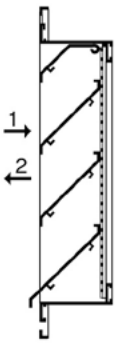

The Lw (dB(A)) values do not take into account any noise attenuation in the room
Pa1 (Pa) = pressure drop on air inlet
Pa2 (Pa) = pressure drop on outlet
Af (m²) = frontal surface
Vf (m/s) = frontal speed

Selection Tables

AG 638 Series

SELECTION - AIR INLET AND EXHAUST

Al (m²)	W x H (mm)	Airflow (m³/h)																					
		200		400		600		800		1000		1500		2000		2500		3000		4000		5000	
0.02	200 x 200	32	23																				
		30	19																				
0.046	400 x 200	25	25	35	33	46	44	55	53														
		6	5	24	20	54	45	94	80														
0.072	600 x 200			25	25	35	33	43	41	50	48												
				10	8	21	17	37	36	58	49												
0.097	800 x 200			25	25	27	25	35	33	42	40	54	52										
				5	4	11	9	20	16	31	26	69	58										
0.123	1000 x 200			25	25	25	25	31	29	38	36	50	48										
				4	3	8	7	14	12	22	18	50	41										
0.148	1200 x 200							26	25	33	31	44	42	53	51								
								10	8	15	12	33	27	58	49								
0.118	400 x 400					25	25	31	29	38	36	50	48										
						8	7	14	12	22	18	50	46										
0.184	600 x 400							25	25	27	25	39	37	47	45	54	52						
								6	5	10	8	21	17	37	31	58	49						
0.249	800 x 400									25	25	32	31	41	39	47	45	53	51				
										6	5	13	10	22	18	35	29	50	41				
0.315	1000 x 400													32	30	39	37	44	42	57	55		
														12	10	23	17	38	25	51	42		
0.38	1200 x 400											25	25	30	28	37	35	42	40	51	49	57	55
												5	4	10	8	15	12	21	17	37	31	58	49
0.296	600 x 600											28	26	37	35	43	41	48	46	57	55		
												9	7	16	13	25	20	35	29	62	52		
0.401	800 x 600													29	27	36	34	41	39	49	47	56	54
														9	7	13	11	19	16	34	28	53	44
0.507	1000 x 600															30	28	35	33	44	42	50	48
																9	7	12	10	19	18	33	28
0.612	1200 x 600																	31	29	39	37	46	44
																		9	7	15	12	24	20
0.262	400 x 800									25	25	31	29	39	37	46	44	51	49				
										9	4	11	9	19	16	30	25	43	36				
0.408	600 x 800											25	25	29	27	35	33	40	38	49	47	55	53
												5	4	8	7	13	10	18	15	32	27	50	42
0.553	800 x 800													25	25	28	26	34	32	42	40	49	46
														5	4	7	6	11	9	19	15	29	24
0.699	1000 x 800															25	25	28	26	36	34	42	40
																5	4	7	5	11	9	18	15
0.844	1200 x 800																	25	25	32	30	38	36
																		5	4	8	7	13	10
0.334	400 x 1000											25	25	34	32	40	38	45	43	56	54		
												7	6	12	10	19	16	28	23	49	41		
0.52	600 x 1000																	35	33	43	41	55	53
																		12	10	21	17	24	27
0.705	800 x 1000																	28	26	36	34	42	40
																		7	5	11	9	18	15
0.891	1000 x 1000																	25	25	30	28	36	34
																		4	3	7	6	11	9
1.076	1200 x 1000																			25	25	32	30
																				3	2	8	6
0.406	400 x 1200													30	28	35	33	40	38	49	47		
														8	7	13	10	18	15	32	27		
0.632	600 x 1200															25	25	30	28	38	36	45	43
																6	4	8	6	14	11	22	18
0.857	800 x 1200																	25	25	31	29	37	35
																		4	4	8	6	12	10
1.083	1000 x 1200																			25	25	32	30
																				5	4	8	6
1.308	1200 x 1200	Lw1	Lw2																	25	25	28	26
		ΔP1	ΔP2																	3	3	5	4

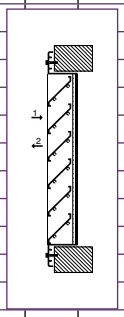

The values Lw1 & Lw2 (in dB(A)) do not take into account any noise attenuation in the room.
ΔP 1 (Pa) = pressure drop on air inlet. ΔP 2 (Pa) = pressure drop on air exhaust. Al (m²) = free surface area.

Air diffusion

Selection Tables

AG 639 Series

SELECTION - AIR INLET AND EXHAUST

AI (m²)	W x H (mm)	Airflow (m³/h) 1000		1500		2000		3000		5000		7000		9000		12000		15000	
0.26	600 x 600	30	19	41	33	48	42												
		8	8	19	17	32	30												
0.35	800 x 600	23	12	34	25	41	34	52	47										
		4	4	10	9	18	16	40	37										
0.44	1000 x 600	18	6	29	19	36	28	47	41										
		3	3	6	6	11	10	25	23										
0.53	1200 x 600			25	14	32	23	43	36	57	53								
				4	4	8	7	17	16	48	44								
0.63	1400 x 600			21	10	29	19	40	32	54	48								
				3	3	6	5	13	12	35	32								
0.72	1600 x 600			18	6	26	15	37	28	51	45	60	56						
				2	2	4	4	10	9	27	24	52	48						
0.81	1800 x 600			16	3	23	12	35	25	49	42	58	52						
				2	2	3	3	8	7	21	19	41	37						
0.9	2000 x 600					21	10	32	23	47	39	56	49						
						3	2	6	6	17	15	33	30						
0.5	800 x 800	15	2	26	15	34	25	44	38	58	54								
		2	2	5	4	9	8	20	18	54	50								
0.63	1000 x 800			21	9	29	19	40	32	53	48								
				3	3	5	5	12	11	34	31								
0.77	1200 x 800			17	5	25	14	36	27	50	43	59	54						
				2	2	4	3	8	8	23	21	46	42						
0.9	1400 x 800					21	10	32	23	47	39	56	50						
						3	2	6	6	17	16	33	31						
1.03	1600 x 800					18	6	30	19	44	35	53	46	60	54				
						2	2	5	4	13	12	25	23	42	38				
1.16	1800 x 800							27	16	42	32	51	43	58	51				
								4	3	10	9	20	18	33	30				
1.29	2000 x 800							25	13	39	29	49	40	56	48				
								3	3	8	7	16	15	26	24				
0.83	1000 x 1000			15	3	23	12	34	25	48	41	58	52						
				2	2	3	3	7	7	20	18	39	36						
1	1200 x 1000					19	7	30	20	45	36	54	47	61	55				
						2	2	5	5	14	13	27	25	44	41				
1.17	1400 x 1000					16	3	27	16	41	32	51	43	58	51				
						2	1	4	3	10	9	20	18	32	30				
1.34	1600 x 1000							24	12	39	28	48	39	55	47				
								3	3	8	7	15	14	25	23				
1.51	1800 x 1000							22	9	36	25	46	36	53	44	61	53		
								2	2	6	5	12	11	19	18	34	32		
1.69	2000 x 1000							19	6	34	22	44	33	51	41	59	50		
								2	2	5	4	9	9	16	14	28	25		
1.02	1000 x 1200					19	6	30	19	44	36	54	46	61	54				
						2	2	5	4	13	12	26	24	43	39				
1.23	1200 x 1200							26	14	40	31	50	41	57	49				
								3	3	9	8	18	16	29	27				
1.44	1400 x 1200							23	10	37	26	47	37	54	45	62	54		
								2	2	7	6	13	12	21	20	38	35		
1.65	1600 x 1200							20	7	35	23	44	33	51	41	60	50		
								2	2	5	5	10	9	16	15	29	26		
1.87	1800 x 1200	Lw1	Lw2							32	20	42	30	49	38	58	47	64	54
		ΔP1	ΔP2							4	4	8	7	13	12	23	21	35	32

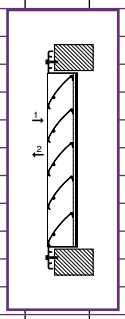

The values Lw1 & Lw2 (in dB(A)) do not take into account any noise attenuation in the room.
ΔP 1 (Pa) = pressure drop on air inlet.
ΔP 2 (Pa) = pressure drop on air exhaust.
AI (m²) = free surface area.

AG 639 Series

SELECTION - AIR INLET AND EXHAUST

AI (m²)	W x H (mm)	Airflow (m³/h)																	
		3000		5000		7000		9000		12000		15000		18000		20000		25000	
2.1	2000 x 1200			30	17	40	27	47	35	56	44	62	51						
				3	3	6	6	10	9	18	17	28	26						
1.71	1400 x 1400	19	6	34	22	44	32	51	40	59	49								
		2	2	5	4	9	8	15	14	27	25								
1.97	1600 x 1400			31	18	41	29	48	37	57	46	63	53						
				4	3	7	6	11	11	20	10	32	29						
2.22	1800 x 1400			29	15	39	26	46	33	54	42	61	49	66	55				
				3	3	5	5	9	8	16	15	25	23	36	33				
2.47	2000 x 1400			27	12	37	23	44	30	52	39	59	46	64	52	68	55		
				2	2	4	4	7	7	13	12	20	19	29	27	36	33		
1.69	1200 x 1600	19	6	34	22	44	33	51	41	59	50								
		2	2	5	4	9	9	15	14	27	25								
1.99	1400 x 1600			31	18	41	28	48	36	56	45	63	52						
				3	3	7	6	11	10	20	18	31	29						
2.28	1600 x 1600			28	14	38	25	45	33	54	42	60	49	66	54				
				3	2	5	5	9	8	15	14	24	22	34	31				
2.57	1800 x 1600			26	11	36	22	43	29	52	38	58	45	64	51	67	54		
				2	2	4	4	7	6	12	11	19	17	27	25	33	30		
2.86	2000 x 1600			24	8	34	19	41	27	50	35	56	42	62	48	65	51		
				2	2	3	3	5	5	10w	9	15	14	22	20	27	24		
1.93	1200 x 1800			32	19	41	29	49	37	57	46	63	53						
				4	3	7	7	12	11	21	19	33	30						
2.26	1400 x 1800			28	15	38	25	46	33	54	42	61	49	66	55				
				3	2	5	5	9	8	15	14	24	22	35	32				
2.59	1600 x 1800			26	11	36	21	43	29	52	38	58	45	64	51	67	54		
				2	2	4	4	7	6	12	11	18	17	26	24	33	30		
2.92	1800 x 1800					33	18	41	26	49	35	56	42	61	48	65	51		
						3	3	5	5	9	8	14	13	21	19	26	24		
3.25	2000 x 1800					31	15	39	23	47	32	54	39	60	45	63	48	69	55
						3	2	4	4	7	7	12	11	17	15	21	19	32	30
2.16	1200 x 2000			29	16	39	26	46	32	55	43	61	50						
				3	3	6	5	10	9	17	16	26	24						
2.53	1400 x 2000			26	12	36	22	44	30	52	39	59	46	64	51	67	55		
				2	2	4	4	7	6	12	11	19	18	28	25	34	31		
2.9	1600 x 2000			23	8	33	18	41	26	50	35	56	42	62	48	65	51		
				2	1	3	3	5	5	9	9	15	13	21	19	26	24		
3.27	1800 x 2000			21	5	31	15	39	23	47	32	54	39	59	44	63	48	69	55
				1	1	2	2	4	4	7	7	11	11	17	15	20	19	32	29
3.65	2000 x 2000	Lw1	Lw2	19	2	29	12	37	20	45	29	52	36	58	41	61	45	68	52
		ΔP1	ΔP2	1	1	2	2	3	3	6	5	9	8	13	12	16	15	26	24

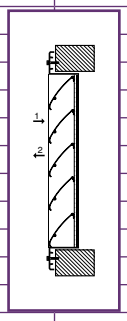

The values Lw1 & Lw2 (in dB(A)) do not take into account any noise attenuation in the room.

ΔP 1 (Pa) = pressure drop on air inlet.

ΔP 2 (Pa) = pressure drop on air exhaust.

AI (m²) = free surface area.

Air diffusion

Selection Tables

AP 639 series

SELECTION - AIR INLET AND OUTLET

Al (m²)	H (mm) L x W (mm)	Airflow (m³/h)	1000	1500	2000	2500	3000	4000	5000	6000	8000
0.252	H 300 300 x 300	Lw (dB(A))	41	48							
		Pa1 (Pa)	19	41							
		Pa2 (Pa)	16	35							
0.356	H 300 400 x 400	Lw (dB(A))	27	39	47						
		Pa1 (Pa)	9.40	21	36						
		Pa2 (Pa)	8	18	30						
0.458	H 400 400 x 400	Lw (dB(A))	25	34	42	49					
		Pa1 (Pa)	6	14	24	36					
		Pa2 (Pa)	5	12	20	31					
0.573	H 400 500 x 500	Lw (dB(A))	25	28	36	43	48				
		Pa1 (Pa)	4	9	15	23	33				
		Pa2 (Pa)	3	7	13	19	27				
0.732	H 500 500 x 500	Lw (dB(A))		25	29	35	40	49			
		Pa1 (Pa)		5	8	13	18	31			
		Pa2 (Pa)		4	7	11	15	26			
0.878	H 500 600 x 600	Lw (dB(A))			25	31	36	44	51		
		Pa1 (Pa)			6	9	12	22	33		
		Pa2 (Pa)			5	8	11	18	28		
1.048	H 600 600 x 600	Lw (dB(A))				25	30	38	45	50	
		Pa1 (Pa)				6	8	14	21	30	
		Pa2 (Pa)				5	7	12	18	26	
1.496	H 800 600 x 600	Lw (dB(A))					25	31	37	42	51
		Pa1 (Pa)					4	7	11	16	28
		Pa2 (Pa)					4	6	10	14	24

Pa1 (Pa) = pressure drop on air inlet
Pa2 (Pa) = pressure drop on outlet

The Lw dB(A) values do not take into account any noise attenuation in the room
For a more comprehensive selection use the Koanda 3D software. Al (m²) = free surface area

AR 637 series

SELECTION - AIR INLET AND OUTLET

Af (m²)	D (mm)	50 (m³/h)		100 (m³/h)		150 (m³/h)		200 (m³/h)		300 (m³/h)		500 (m³/h)		800 (m³/h)		1,000 (m³/h)		1,500 (m³/h)		2,000 (m³/h)		2,500 (m³/h)		3,000 (m³/h)	
0.007	125	5	8	25	32	32	64																	Lw	Pa1
		2.0	6	4.0	26	5.9	51																	Vf	Pa2
0.012	160			5	10	5	22	26	40	41	90														
				2.3	8	3.4	17	4.6	32	6.9	72														
0.019	200					5	9	5	16	33	36	49	97												
						2.2	7	2.9	13	4,4	28	7.3	77												
0.029	250							5	7	5	16	27	42	49	107										
								1.9	6	2.9	13	4.7	33	7.5	86										
0.047	315									5	6	5	18	28	42	43	65								
										1.8	5	3	14	4.7	33	5.9	53								
0.070	400											5	16	27	41	33	64								
												2	13	3.2	33	4	51								
0.090	450													5	25	28	39	40	88						
														2.5	20	3.1	31	4.6	70						
0.120	500															5	21	31	47	43	83				
																2.3	17	3.5	38	4.6	67				
0.150	560																	5	31	39	55	45	86		
																		2.8	25	3.7	44	4.6	68		
0.200	630	Lw	Pa1																	25	31	31	48	37	69
		Vf	Pa2																	2.8	25	3.5	38	4.2	55

Fresh air inlet

Outlet

The Lw (dB(A)) values do not take into account any noise attenuation in the room
Pa1 (Pa) = pressure drop on air inlet
Pa2 (Pa) = pressure drop on outlet
Af (m²) = frontal surface
Vf (m/s) = frontal speed

Environmental protection

Regulations, sorting and recycling

Waste electrical and electronic equipment

The WEEE and ROHS European Directives have been transposed into French law.
Electrical and electronic equipment is identified by the crossed-out bin logo.
The eco-participation is invoiced by the producer and has to be passed on in identical form right down to the end user for "household" class waste. Aldes has opted to render the eco-participation visible for all its electronic and electrical equipment.
Aldes is a member of the ADEME group of producers.
Aldes is a member of the "Eco-Systèmes" environmental organisation, which collects and processes WEEE.
The price list is available on www.eco-systemes.fr

Recycling batteries, coils and accumulators

Some of our equipment has batteries. In accordance with Decree 2009-1139 dated 22.09.09, information concerning the identification, insertion and removal of batteries is included in the instruction leaflets. At the end of their service life, batteries should be taken to appropriate collection points.

REACH European Regulation

(Registration, Evaluation, Authorisation of Chemical substances).

In application of the REACH directive, Regulation 1907/2006/EC, we provide our customers with the information featured in Article 33.1 of the regulation for all products sold containing items on the list of authorised substances, which is regularly reviewed by the European Agency ECHEA

Recycling and sorting printed matter and packing

Aldes prints its catalogues on PEFC paper from sustainably-managed forests.

At the end of their life, they should be taken to an appropriate collection point.

Once the products have been installed, the packing must be sorted and disposed of at the relevant collection points.
Help in sorting is indicated on the packing.
Sorting of printed matter and packing has become mandatory under the Triman regulations.

• Extracts from the "Warranty" general terms and conditions of sale

1. Scope of the warranty (extract paragraph 13.1)

The Aldes warranty is limited to responsibility for components acknowledged as defective by the Aldes services, excluding all labour and travelling costs.

2. Warranty period and starting point (extract paragraph 13.2)

All products carry a two-year parts warranty

- warranty starts from the date on which Aldes invoices its customer.
- warranty starts from the date of Commissioning if purchased from Aldes.
- warranty starts from the date of the till receipt for general public distribution.

Under no circumstances can the warranty end date be more than thirty months from the date of manufacture identified by the product serial number. Thermodynamic system tanks carry a five-year parts warranty (two years for the rest of the components). Spare parts offered by Aldes carry a one-year parts warranty from the date on which Aldes invoices its customer.

3. Warranty limits (extract paragraph 13.3)

The warranty on products or components does not apply for:

- replacements or repairs resulting from abnormal use, conversion not validated in writing by Aldes or failing to comply with the Aldes stipulations or instructions.
- replacements or repairs resulting from deterioration or accidents due to negligence, conversion or faulty installation, servicing or monitoring.
- replacements or repairs resulting from normal wear of the equipment.
- incidents due to chance or force majeure.
- in cases where the customer is not up to date with his payments for the defective product.

Your customer account number: .....

• Your Aldes contacts

Subject	Name	e-mail
Sales		@aldes.com
Technical studies and information		@aldes.com
After-sales service/Order - delivery		@aldes.com
Stores		@aldes.com
Services		@aldes.com

• Contact details for your Aldes branch

Tel.: ..... Fax: .....

• Opening times for your Aldes store

.....

• Invoicing minimum

➔ For all orders below the value of 150 euros net excl. VAT, an administrative fee of 15 euros excl. VAT will be invoiced.

General Terms and Conditions of Sale

ALDES INTERNATIONAL – 2021

FOREWORD

The purpose of these General Terms and Conditions of Sale (hereinafter "Terms and Conditions") is to define, in accordance with the provisions of Article L.441-1 of the Commercial Code, the respective obligations incumbent on ALDES AERAULIQUE (hereafter "ALDES") and its Customers under their contractual relations governing the sale of products and services by ALDES.

1. APPLICATION

Any order submitted to ALDES implies the Customer's full acceptance without reserve of these Terms and Conditions, which are received and acknowledged by the Customer. These Terms and Conditions prevail over all other agreements and conventions, notably the Customer's own general terms and conditions of purchase.
Only the specific terms and conditions of sale specified in writing between ALDES and the Customer may, if appropriate, deviate from these Terms and Conditions. All provisions of these Terms and Conditions that are not expressly amended or waived by the special terms and conditions of sale retain their full effect.
ALDES is only bound by commitments made by its employees provided the company confirms them in writing. No orders are considered complete and definitive unless expressly accepted via a document confirming receipt of the order and indicating a registration number.
As ALDES customers are professionals, consumer law is not applicable.

2. INFORMATION - PRODUCTS - PROJECTS

Details provided on catalogues, prospectuses, price lists, diagrams, websites, etc. are provided by ALDES for the purposes of information. ALDES reserves the right to make modifications at any time without notice.
The liability of ALDES is limited to the product characteristics. As professionals, Customers remain responsible for their product choices and implementation according to the characteristics of the installation. Any theoretical drawings, dimensioning calculations etc. produced by ALDES or which result from the calculation software provided to generate projects and price proposals, cannot be considered as a completed installation project and should, if necessary, be validated by any competent body or Technical Design Office at the Customer's initiative. All projects remain the mission and responsibility of the project manager or, if appropriate, the specialist contractor carrying them out.
ALDES systems must be installed by organised and reputed professional fitters, who employ qualified personnel and hold the required approvals. Any sub-contracted work must therefore be identified, known to Aldes, qualified and made official by a written contract.
As part of its obligation to provide advice, ALDES keeps all necessary information concerning the use of its products and its service provisions available to the Customer.

3. PRICES

Products are supplied at the prices indicated in the unit price schedules detailed in the ALDES Pricing and, if appropriate, in the commercial proposal forwarded by ALDES to the Customer or under any specific conditions agreed between them.
Confirmed prices are those in effect at the time of the order.
Invoiced prices are those in effect on the date of the order or as necessary, those appearing in the proposal forwarded to the Customer.
Any delivery that is available within less than two months is invoiced at the base price agreed at the time of ordering. Where the delay is longer, the price will be corrected by virtue of the legal provisions in force and indexed according to the price revision formula included in the proposal.
For all orders below the value of 150 euros net excl. VAT, an administrative fee of 15 euros excl. VAT will be invoiced.
The unit price schedule of the ALDES Pricing is not applicable in the event of:
- specific product packaging;
- specific order necessitating one or more product modifications and/or assembly;
- unit prices may also vary according to the frequency of deliveries. In these cases, the Customer should ask ALDES for a specific quotation in advance.

Prices are given in euros excl. VAT, net of any discount and contributions or costs, especially when linked to the prevention and management of electrical and electronic household waste. Recycling costs for electrical and electronic professional waste are included in the selling price (WEEE - see also Article 8 of these Terms and Conditions). The communication of prices does not constitute a firm offer, as prices are subject to change without notice. The validity of a quotation (content and price) is limited to two months from its date of issue.
The shipping prices and schedules set out in the current ALDES Pricing do not constitute a firm proposal and may be modified without notice, especially in the event of change of economic conditions such as variations in the price of raw materials, fuel, duties and taxes, unusual variations in exchange rates, collapse of markets, scarcity of materials, changes to legislation, etc. Prices will also be revised in the event of new taxes, contributions or costs due to changes in legislation affecting the compliance of ALDES products or the prevention and management of electrical and electronic equipment waste and its elimination, processing and recycling (non-exhaustive list).

4. REBATES, DISCOUNTS, REDUCTIONS

The Customer may receive rebates, discounts and reductions appearing in the ALDES Pricing schedule. These are revised annually and are applied on the bases of turnover or volumes supplied of certain product families, promotional campaigns or conditions of collection.

5. DELIVERIES - TRANSFER OF RISKS

5.1. Delivery lead times

Delivery lead times are provided as an approximate guide.
They are shown "delivered" (CPT place of delivery), except for export orders, where the guide delivery on the ALDES order acknowledgements relate to the availability in its loading bays (EXW). Delivery lead times start on the later of the following dates: the date of acknowledgement of receipt of the order or the date of receipt by ALDES of the down payment or the supplies that the Customer has undertaken to deliver.
Any overrun of the delivery lead times cannot cause the cancellation of the order, nor a revision of prices, nor compensation or late penalties.
ALDES is discharged automatically of any commitment concerning the delivery lead times if the terms and conditions of payment are not met by the Customer or in the event of circumstances outside its control, a case of *force majeure* or events such as lock-out, strike, epidemic, war, requisition, fire, flooding, tool accidents, scrapping of major parts during manufacture, interruption or delay in transport or any other cause generating total or partial lack of activity for ALDES or its suppliers.
ALDES will keep the Customer advised of the aforementioned cases or events.

5.2. Delivery conditions - transfer of risks

Deliveries are made as CPT place of delivery indicated by the Customer at the time of ordering except for exports where they are EXW. Delivery entails the transfer to the Customer of all risks pertaining to the goods and the sales invoicing by ALDES.
Shipping prices are detailed in the table below:

Order amount net excl. VAT	Shipping charge in euros excl. VAT
0 to 200 euros	35 euros
200.01 to 500 euros	45 euros
500.01 to 800 euros	65 euros
800.01 to 1,000 euros	80 euros
> 1,000 euros	Free

Where a customer requests partial delivery for an order meeting the conditions for free delivery but which falls below these conditions, Aldes has the right to invoice the shipping charges relating to this delivery as per the conditions above. The free delivery is calculated on the bases of the order exclusively, not on the proposal.
These shipping charges are valid for Metropolitan France (excluding Corsica, overseas departments and territories and foreign countries), save for ducts and accessories more than 315 mm in diameter or more than 3 metres long, and for products in the Heat pump, Domestic hot water and Heat recovery ventilation unit ranges, where shipping charges will be invoiced at cost. For deliveries with special conditions (lifting machinery, tailgate, express, non-exhaustive list), the relevant cost prices will also be invoiced, as per the quotation available from the seller.
Delivery is made by direct handover to the Customer or by simple notice of availability. Sales in ALDES stores are made EXW, therefore by collection from the counter.
The equipment delivered is not taken back, except in the cases and conditions provided for in Article 12.3 of these Terms and Conditions.

5.3. Warehousing and handling

If shipping is delayed for any reason outside the control of ALDES and with ALDES consent, the goods may be stored and, if necessary, handled by ALDES at the risk and expense of the Customer, as ALDES declines any liability in this matter. For commercial purposes, ALDES agrees to store the goods free of charge for fifteen calendar days. Beyond this, the storage will be outside at the total expense of the Customer.

6. CARRIAGE OF DELIVERED GOODS

In the event of damage of any kind occurring during transport, it is up to the Customer to invoke the liability of the carrier and/or the insurer under the customary deadlines and procedures and to inform ALDES by registered letter with acknowledgement of receipt within three days of delivery. It is up to the Customer to verify the quantities and qualities of deliveries on arrival, before discharging the carrier. Acceptance without reservation of goods delivered excludes any later recourse against ALDES.

7. PACKING

Packing is always charged to the Customer and is not recovered by ALDES. In the absence of specific indications, ALDES prepares the packing in the best interests of the Customer.

8. DEALING WITH ELECTRICAL AND ELECTRONIC EQUIPMENT WASTE

In accordance with Articles R. 543-179 to R. 543-206 of the Environment Code, ALDES contributes to selective waste collection. ALDES is registered as a producer of electrical and electronic equipment on the National Register of Producers. ALDES products bear a mark specifying their identity and a control sticker indicating their date of introduction to market.
Products in "household" and "professional" categories: ALDES provides for and contributes to the collection, removal and treatment of waste in these categories through an approved eco-body. These products are subject to a waste disposal cost ("eco-contribution"). This cost for "household" category products is stated on the invoices issued by ALDES. The customer is in charge of passing this cost on, without modification, to the end customer.

9. PAYMENT - LATE PENALTIES - PENAL CLAUSE

In accordance with Article L. 441-10 of the Commercial Code and Articles 1231 *et seq.* of the Civil Code, including 1231-5, and subject to any applicable inter-professional agreements:
Payment is made exclusively by bank transfer; no other payment method is permitted save for special conditions. The transfer is made by the customer at the time of ordering against a pro forma invoice. Payment is net without discounts. Any clause or request attempting to fix or obtain a longer payment period should be agreed between ALDES and its customer. Payments are made to the ALDES head office.
Advance payments are made on a cash basis. Repair and servicing work and also additional items supplied or delivered during fitting are invoiced every month and payable on a cash basis, net and without discounts.
Where the provisions of Article 9 (1) are waived, payment is understood to mean the receipt by ALDES of the full invoice amount and not simply the delivery of a document bearing the obligation to pay (bill of exchange). Late payments will give rise to the application of penalties at the most recent European Central Bank refinancing rate, increased by ten percentage points.
For sales in ALDES stores to customers who do not have an account with ALDES, payment will be in cash before the goods are removed.
Late payment penalties are due without reminders being necessary.
Any professional customer subject to Article L.441-6 of the Commercial Code in a late payment situation automatically becomes an ALDES debtor. In addition to late penalties already defined by the law, there is a fixed fee of 40 euros for recovery charges for each unpaid invoice. In the event of non-payment by the Customer, the sums sent for collection through legal action will be increased by 15% independently of the late penalties indicated above and the recovery costs incurred.
The Customer cannot tie payment to the provision of invoices meeting his requirements not provided for under the applicable legislation or any other non-mandatory document.
The payment dates agreed cannot be extended for any reason whatsoever, including in a dispute. Complaints do not dispense the Customer from paying his invoices on their due date and no amounts may be withheld on the amounts indicated on ALDES invoices.
In the event of sale, transfer, assignment as collateral or contribution by the Customer of his equipment or business assets, for example when payment is not made or a bill of exchange accepted on the due date, the sums due become payable immediately, regardless of the conditions agreed previously.
Any major change in the Customer's financial or economic situation, even after partial fulfilment

of orders, may lead to the revision of the conditions of payment applicable to these orders and the revision of the line of credit granted to the customer by ALDES.
In the event of non-payment by the due date, ALDES may suspend the shipment of other goods ordered by the Customer, without prejudice to any potential damages.
ALDES is a manufacturer, not a leasing agency or a contractor, and is therefore not subject to the provisions of Article 1799-1 of the Civil Code. It therefore accepts no holdback - whether or not guaranteed - on the amount of products invoiced.

10. RETENTION OF OWNERSHIP - CANCELLATION CLAUSE

ALDES retains ownership of the goods sold until full and actual payment of the whole price (principal and accessories).
Consequently, the non-payment of any sums due could lead ALDES to demand return of the goods in question. This claim for retention of ownership will be for the return of unpaid goods or a claim for the price of the goods. In this case, the customer undertakes to send ALDES a list of goods that he has not paid ALDES for and for which he has not been paid by his own customers. He also undertakes to provide ALDES with the contact details for the customers in question.
From the time of delivery as defined in Article 5.2 above, the Customer assumes the risks of loss or deterioration of the goods and the liability for any damage they may cause. Consequently the Customer undertakes to obtain suitable insurance against all risks concerning the transport, loss, theft or partial or total destruction of the goods, from a reputable, solvent insurer.
ALDES reserves the right to prohibit any modifications of the goods following the initiation of any collective procedure against the Customer.
Should the Customer fail to meet anyone of his obligations, ALDES reserves the possibility to resolve or terminate the sale automatically after issuing formal notice without reaction to the Customer by registered letter with acknowledgement of receipt or to continue to execute it. In this case, any advance payment paid will remain acquired by ALDES as compensation, without prejudice to any other damages.
The Customer should inform ALDES of any threat, action, seizure, requisition, confiscation or any other measure that may affect its right of ownership of the products.
Failure to comply with these provisions by the Customer will engage his liability and permit ALDES to reduce the sale by simple notification by registered letter with acknowledgement of receipt to take back any products still in stock and refuse to continue delivering to the Customer.
The products still in the possession of the Customer are assumed to be unpaid and ALDES may take them back as repayment for any unpaid amounts.
Any partial payments already made will serve to cover damages caused by failure to fulfil the contract and, initially, damage due to the disappearance, resale, deterioration or obsolescence of the products. The costs of dismantling, transport and storage generated by the Customer's failure to fulfil his obligations under the sale will then be attributed.

11. INSPECTION AND TESTS

For any goods subject to factory inspection or acceptance testing, this should be done prior to shipment. A Customer requesting factory acceptance testing should tell ALDES what types of test are required. The Customer will pay the costs of acceptance test technicians and inspection certificates.
Should there be no test technicians on the agreed testing day, the goods will be deemed definitively accepted as soon as loaded in the factory.
Should, after delivery the characteristics or performances of the equipment be contested, requiring action by ALDES, the Customer will pay all ALDES costs incurred.

12. CLAIMS - CANCELLATION OF ORDERS - RETURN OF EQUIPMENT

12.1. Claims

In accordance with Article 6 above, claims relating to transport must be submitted by the Customer as per the carrier's stated rules of procedure, with a copy sent to ALDES.
Claims relating to quantities or weights can only be entertained if they are formulated in writing within three days of the arrival of the goods at their destination and prior to any transformation or installation.
Claims relating to quality are only admissible if they are submitted in writing within fifteen (3) days of the arrival of the goods at their destination.
In the event of a claim recognised as justified by ALDES, its liability is limited to the replacement or repair of the part acknowledged as defective, without any compensation being applicable for any reason whatsoever.
Replaced goods should be returned to the ALDES factory in full. Exchanges or returns must be made by the usual ALDES carriers. The Customer will be responsible for any dispensation.

12.2. Order cancellation

Cancellation of an order by the Customer engages his liability. The Customer may not cancel an order without ALDES' prior express agreement and provided that it at least takes delivery of the equipment manufactured and compensates ALDES for the outlays and lost earnings pertaining to the equipment still under manufacture.

12.3. Return of equipment

No equipment may be returned save in exceptional cases and after written authorisation from the ALDES sales department. Equipment returns only concern products at standard applicable prices, in their initial packing and in good condition. All carriage costs are paid by the Customer. Any returns to ALDES without prior authorisation in writing will be systematically refused and sent back to the Customer at his expense.
Under no circumstances are specific apparatus manufactured on request and ducts and accessories taken back or exchanged.

12.4. Return of equipment and after-sales service:

Equipment returns under after-sales service will only be accepted with the prior written agreement of ALDES, shown on an incident report signed by the ALDES After-sales service, which should be affixed without fail to the package containing the returned equipment. Any after-sales service returns to the ALDES factory without this incident report will be refused and sent back to the shipper at his expense. Conditions for taking back spare parts are subject to prior agreement from the ALDES After-sales department.

13. WARRANTY

13.1 Scope of the warranty

The ALDES warranty is limited to responsibility for components acknowledged as defective by the ALDES services, excluding all labour and travelling costs.
ALDES will repair any product returned under warranty to its workshops by replacing the defective components or, on its initiative solely, replacing the returned product in its entirety.
Where repairs have to take place on the installation site, ALDES will pay the part costs but under no circumstances the labour and travelling costs relating to the replacement.
ALDES will not be liable for any compensation for damages.

13.2 Warranty period and starting point

All products carry a two-year parts warranty from the date on which ALDES invoices its customers or, for general public distribution, from the date of the till receipt. The warranty covers all defects in materials or manufacture, provided that the product has been installed and serviced as per best practices and in accordance with the ALDES stipulations. Under no circumstances can the warranty end date be more than thirty months from the date of manufacture identified on the product (save for special service offer conditions).
Thermodynamic system tanks carry a five-year parts warranty (two years for the rest of the components).

13.3 Warranty and liability limits

The following are excluded from the ALDES warranty: incidents due to the lack or failure of the power supply, a clear servicing fault, use failing to comply with the ALDES installation and use stipulations and installations failing to comply with French standards and regulations in force.
The warranty does not apply for
- incidents due to chance or force majeure
- replacements or repairs resulting from normal wear of the equipment.
- replacements or repairs resulting from deterioration or accidents due to negligence, conversion or faulty installation, servicing or monitoring
- replacements or repairs resulting from abnormal use, conversion not validated in writing by ALDES or failing to comply with the ALDES stipulations or instructions
- in cases where the customer is not up to date with his payments for the defective product.

The replacement of parts or product during the warranty period does not mean that the initial product warranty period is extended.
In addition, ALDES is not required to repair the adverse consequences of the Purchaser or Third Parties. Under no circumstances will ALDES be required to compensate for immaterial and/or indirect damage, including, for example, commercial prejudices and loss of operation or profit. ALDES liability is limited strictly to the sole obligations described in these general terms and conditions of sale.
In addition, handling a product or component under the warranty in no way recognises ALDES liability.
For information, should a claim be made, the product in question must be kept on the claimant's premises for joint expert assessment. The Purchaser will be responsible for assuming the consequences of the return under warranty of a Product, under the hypothesis that ALDES has not been advised in advance of any potential involvement of this product as part of a claim.

13.4 Return of products under warranty

Products returned under warranty will only be accepted if agreed by ALDES in advance, shown by issuing a specific after-sales returns slip. The product returned should without fail be accompanied by this returns slip filled in and clearly visible on the package. Any return under warranty reaching ALDES without an incident report duly filled in will be systematically refused and returned to the shipper without being processed. The customer is responsible for organising and paying the cost of return carriage to ALDES for defective parts or equipment.

13.5. Spare parts

Spare parts essential to the use of ALDES products can be supplied for a period of five years from their date of manufacture.
Spare parts essential to the use of ALDES NF heat pumps can be supplied for a period of ten years from their date of manufacture.
ALDES spare parts carry a one-year warranty with effect from their invoicing date, provided the installation complies with the standards in force and is used in compliance with the ALDES stipulations.
To claim the warranty, the parts must be returned according to the after-sales procedure described in Chapter 13.4.

13.6. Provision of service

ALDES can provide services for products sold, including commissioning, assistance, expert assessment, servicing or repairs. This work is covered by the special general terms and conditions of sale agreed with the Purchaser. ALDES provides its service systematically with the professional in charge of the installation or maintenance present. For information, ALDES is never involved in the stipulation, dimensioning or installation of equipment. It may not be held liability for failure by the purchaser or the professional in charge of the installation to comply with best practices and standards. Any journey to the site made in vain for a cause that cannot be attributed to ALDES will give rise to specific invoicing based on the pricing scales in force.

14. APPLICABLE LAW - ATTRIBUTION OF JURISDICTION

All operations covered by these Terms and Conditions are subject to French law. ALDES and its Customer undertake to attempt to settle amicably any disagreement likely to arise between them in cases of problems generated by these Terms and Conditions.
Any litigation will fall exclusively under the court with jurisdiction over the ALDES head office, even in the case of third party claims or multiplicity of defendants, unless ALDES prefers to designate another competent jurisdiction, notably that of the customer's head office or of the location of the goods.

Notes

CONTACTS

INFORMATION

PRODUCTS, NEWS, DOCUMENTS, SOFTWARE, ETC.

- Website: **www.aldes-international.com**
- Youtube : Aldes International
- Twitter: Aldes Officiel
- LinkedIn: Aldes

PROFESSIONAL CONTACTS

PROJECTS, COMMERCIAL REQUESTS

- www.aldes-international.com > Contact >
- aldes_international@aldes.com

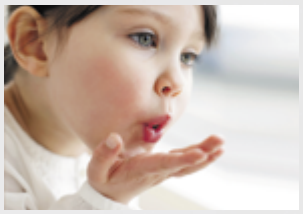

3D OBJECTS

DOWNLOAD 3D OBJECTS FOR ALDES PRODUCTS

- Download platform: cad.aldes.com

#HealthyLiving

Because air is not just for us to breathe but it also helps us live a healthier life, Aldes commits to taking care of the health of each building occupant.

Our skills in air management enables us to help design indoor living spaces that are smart and caring. Where we live, work and have fun, Aldes watches over our well-being through innovative solutions that improve indoor air quality.

High-performance solutions that respect the environment, enabling the renewal and purification of indoor air, heating it, cooling it, and providing domestic hot water.

More than just a movement, **#HealthyLiving** embodies our principles of being caring and responsible, as well as our pioneering spirit.

aldes

For more information, contact your Aldes advisor,
visit aldes.com or find us at:

Find all the contact points inside the Catalogue.

Aldes headquarters - 20, boulevard Irène Joliot-Curie - 69694 Vénissieux Cedex - France
Tel. +33 (0)4 78 77 15 15 - Fax +33 (0)4 78 76 15 97

Commercial Catalogue_2021/22_En_01 - 06/2021 - RCS Lyon 956 506 828 - Creation: www.studiotrium.com - Aldes reserves the right to modify its products at any time to introduce new technologies – Non-contractual photographs – Photo credits: Getty Images/iStockphoto - AldesGroupe